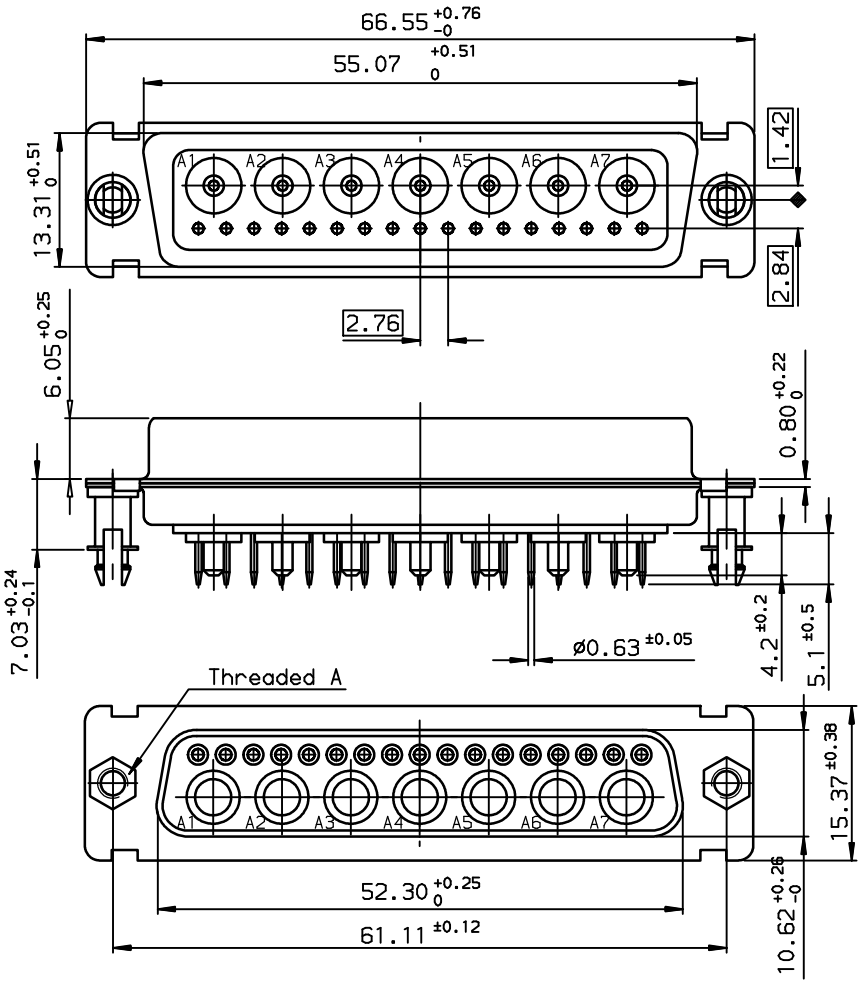

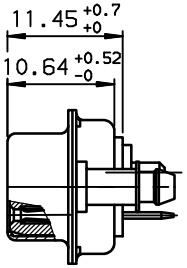

LAYOUT DIMENSIONS (after plating)

CONNECTOR SIDE VIEW

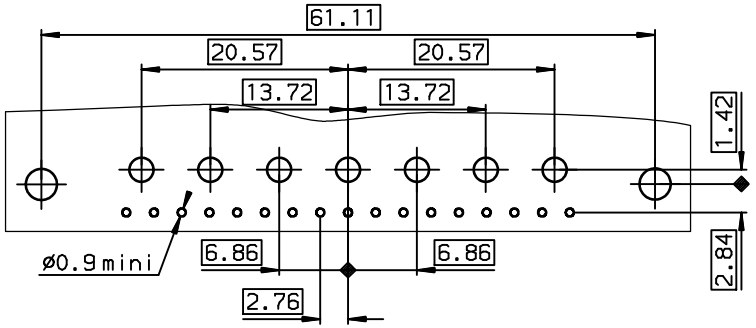

TIN LEAD PART NUMBER

DD024W7S300G30	UNC 4.40
DDL24W7S300G30	M3
PART NUMBER	Threaded A

LEAD FREE PART NUMBER

DD024W7S300G30LF	UNC 4.40
DDL24W7S300G30LF	M3
PART NUMBER	Threaded A

GENERAL CHARACTERISTICS AND ROHS INFORMATIONS:
SEE DRAWING C01-8639-0000

European Views

rev	ecn no	dr	date
B	-	BAR	2003/12/15
C	LS05-001	MPE	2005/03/08
D	LS06-0095	LGO	2006/07/20
-	-	-	-
-	-	-	-
-	-	-	-
-	-	-	-

www.fciconnect.com

Dr	JOUBERT	1999/01/26
Eng	PESSON	1999/01/26
Chr	LEGARE	1999/01/26
Appr	LEGARE	1999/01/26

surface ISO 1302 ✓ | tolerance std ISO 406 ISO 1101

TOLERANCES UNLESS OTHERWISE SPECIFIED

ANGULAR		LINEAR	
		0.X	±0.1
		0.XX	±0.1
0.XX°	±2°	0.XXX	±0.1

Product family D-SUB

projection | mm

size A3 | Scale 2

ECN LS06-0095

Spec ref -

title: SOCKET CONNECTOR 24W7 WITH POWERS CONTACTS

dwg no C01-8639-1648 | Rev. D

catalog no -

CUSTOMER | sheet 1 of 1

REV F - 2006-04-17

Copyright FCI.

PDM: Rev:D STATUS:Released Printed: Aug 26, 2006