THIS DRAWING IS UNPUBLISHED. RELEASED FOR PUBLICATION - ,- .
© COPYRIGHT - By - ALL RIGHTS RESERVED.

REVISIONS

P	LTR	DESCRIPTION	DATE	DWN	APVD
	G	REV PER ECO 16-001182	1-28-16	CT	RL

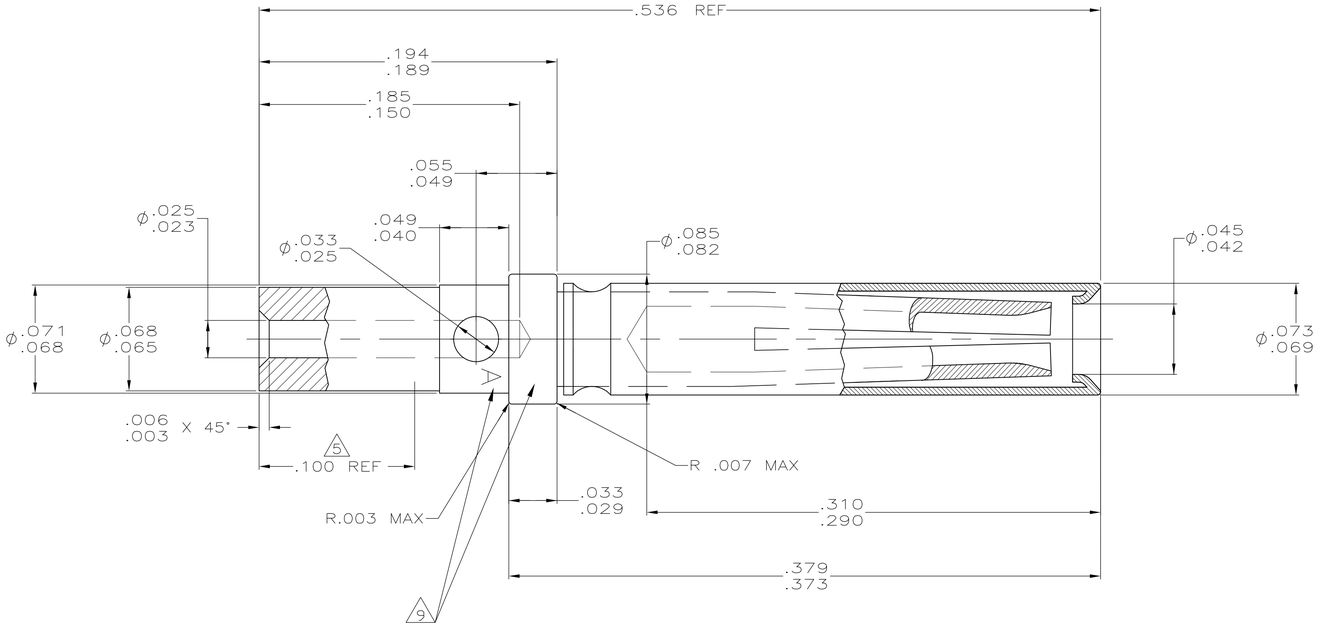

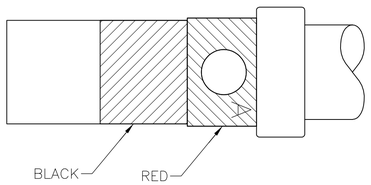

COLOR BANDS
PART NO 206795-3 ONLY

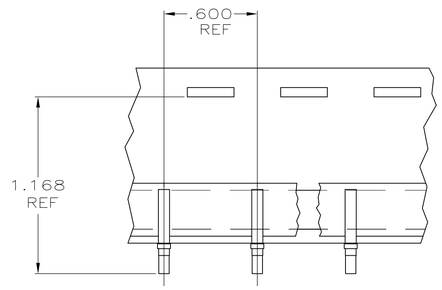

TAPE MOUNTED
PART NO 206795-2 ONLY
SCALE 2:1

1. ALL DIMENSIONS APPLY AFTER PLATING.
2. THIS CONTACT COMPLIES WITH MIL-C-24308/10, EXCEPT WIRE BARREL.
3. ALL DIAMETERS CONCENTRIC WITH EACH OTHER WUTHIN .004 T.I.R.
4. ALL SURFACES HAVE 63√ FINISH OR BETTER UNLESS OTHERWISE SPRCIFIED.
5. POINT OF PLATING MEASUREMENT .100 FROM WIRE BALLEL END OF CONTACT.
6. SLEEVE MAY BE CRIMPED OR DIMPLED ON TO CONTACT BODY.
7. OPTIONAL LOCATION FOR STAMPED LETTER "A"

	DESCRIPTION	PART NUMBER
	RESTRICTED TO SPACE SYSTEMS LORAL	206795-6
	RESTRICTED TO SPACE SYSTEMS LORAL	206795-5
SUPERSEDED BY -2	SAME AS -3 EXCEPT TAPE MOUNTED	206795-4
	SAME AS -1 EXCEPT COLOR COATED	206795-3
	SAME AS -1 EXCEPT TAPE MOUNTED	206795-2
	AS SHOWN	206795-1

THIS DRAWING IS A CONTROLLED DOCUMENT.

DIMENSIONS: INCHES

TOLERANCES UNLESS OTHERWISE SPECIFIED:
0 PLC ± -
1 PLC ± -
2 PLC ± -
3 PLC ± -
4 PLC ± -
ANGLES ± 2°

MATERIAL: SEE CALOUT
FINISH: SEE CALOUT

DWN C.C.THOMAS 1-17-03
CHK D.MILLER 1-17-03
APVD D.MILLER 1-17-03
PRODUCT SPEC —
APPLICATION SPEC —
WEIGHT —

TE Connectivity

NAME: SOCKET CONTACT ASSY,SIZE 20 (FOR #26 & #28 WIRE) —

SIZE	CAGE CODE	DRAWING NO	RESTRICTED TO
A1	00779	C-206795	—

CUSTOMER DRAWING
SCALE 20:1 SHEET 1 OF 1 REV G

4805 (1/15)