~~THIS DRAWING IS UNPUBLISHED.~~ RELEASED FOR PUBLICATION -,- .
© COPYRIGHT - By - ALL RIGHTS RESERVED.

LOC	DIST
CM	00

REVISIONS

P	LTR	DESCRIPTION	DATE	DWN	APVD
	G	REVISED PER EC 0G3B-0387-03	21MAY03	SC	CJ
	H	REVISED PER ECR-13-011437	10OCT2013	AV	RP

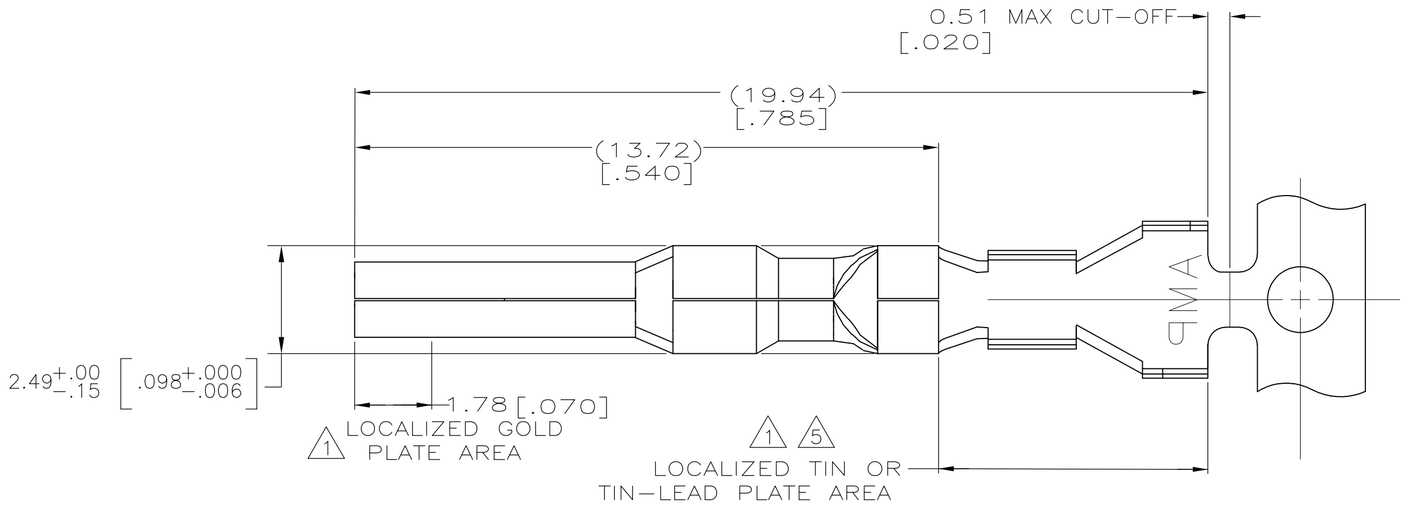

1. 0.00076 [.000030] MIN GOLD IN LOCALIZED GOLD PLATE AREA AND 0.00254-0.00635 [.000100-.000250] BRIGHT TIN-LEAD IN LOCALIZED TIN-LEAD PLATE AREA OVER 0.00127 [.000050] MIN NICKEL.
2. WIRE RANGE: 0.5-1.4MM² (20-16 AWG).
3. INSULATION RANGE: 2.01-3.20[.079-.126] DIA.
4. DIMENSIONS IN BRACKETS ARE IN INCHES.
5. 0.00076 [.000030] MIN GOLD IN LOCALIZED GOLD PLATE AREA AND 0.00254-0.00635 [.000100-.000250] BRIGHT TIN IN LOCALIZED TIN PLATE AREA OVER 0.00127 [.000050] MIN NICKEL.

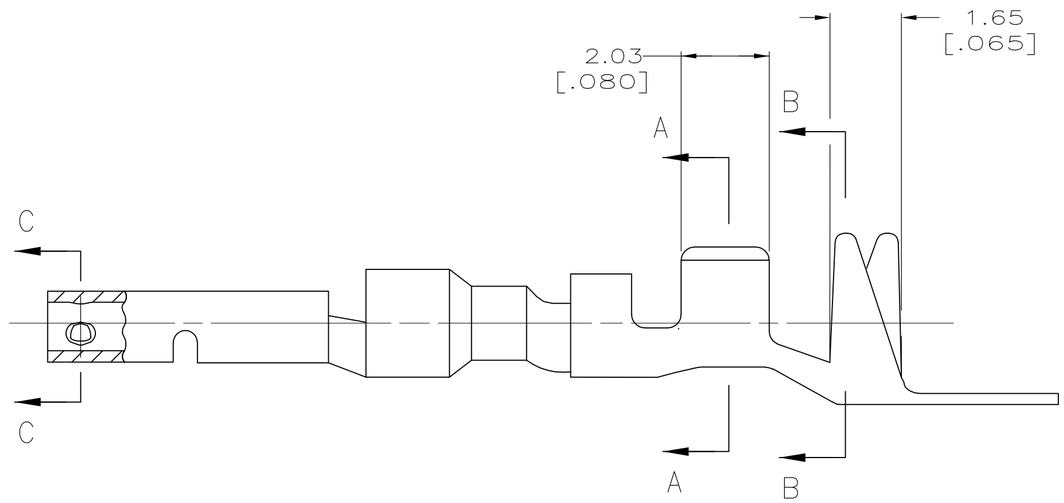

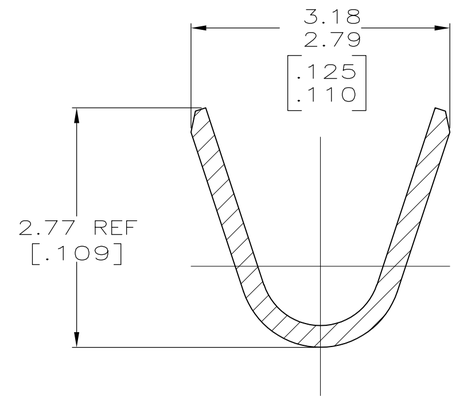

SECTION A-A
SCALE 20:1

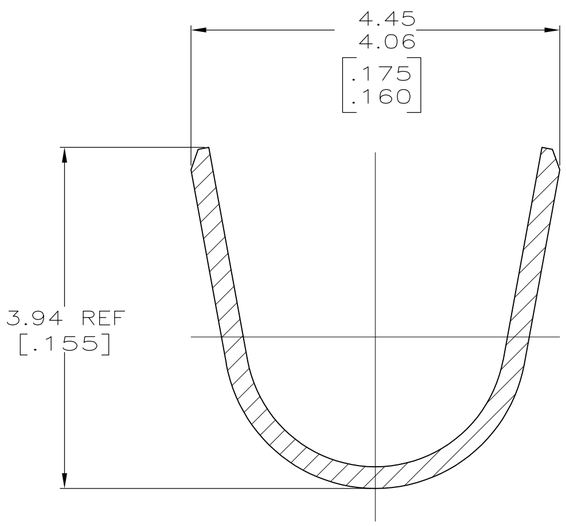

SECTION B-B
SCALE 20:1

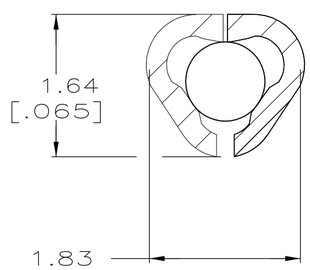

SECTION C-C
SCALE 20:1

5	0.25[.010] BRASS	1-794223-0
1	0.25[.010] BRASS	794223-3
PRE-TIN	0.25[.010] BRASS	794223-1

THIS DRAWING IS A CONTROLLED DOCUMENT.

DIMENSIONS: INCHES

TOLERANCES UNLESS OTHERWISE SPECIFIED:
0 PLC ±
1 PLC ±
2 PLC ±
3 PLC ± 0.30 [.012]
4 PLC ±
ANGLES ±

MATERIAL: SEE TABLE
FINISH: SEE TABLE

DWN S. CARPENTER 21MAY2003
CHK C. JONES 21MAY2003
APVD C. JONES 21MAY2003
PRODUCT SPEC
APPLICATION SPEC
WEIGHT

TE Connectivity

NAME: SOCKET, MINI UNIVERSAL MATE-N-LOK™ 2

SIZE	CAGE CODE	DRAWING NO	RESTRICTED TO
A2	00779	C-794223	—

CUSTOMER DRAWING | SCALE 10:1 | SHEET 1 OF 1 | REV H

794223