REV.	DATE	DESCRIPTION
A	10/20/03	UPDATE DRAWING FORMAT
B	12/28/05	UPDATE COVER

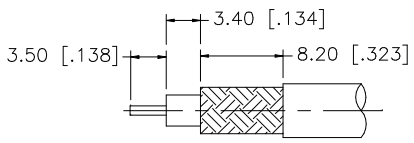

RECOMMENDED
CABLE STRIPPING DIM'S

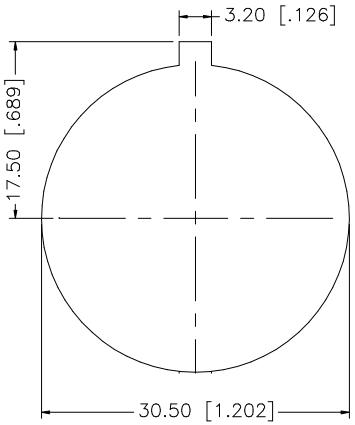

RECOMMENDED
MOUNTING HOLE

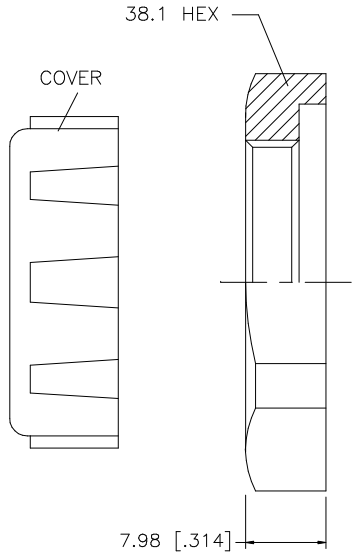

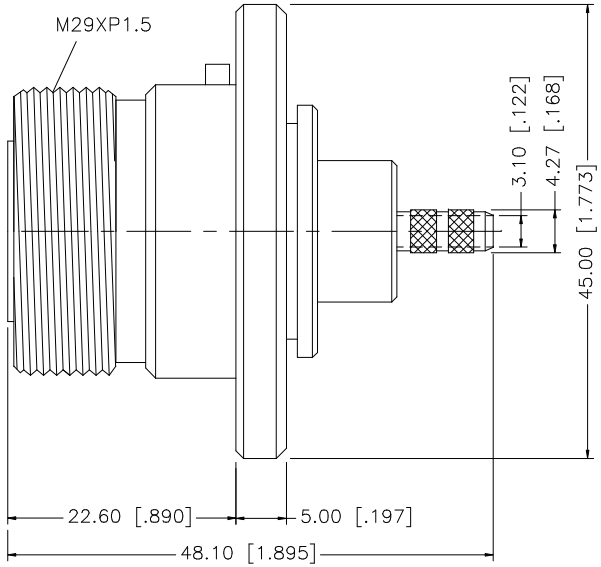

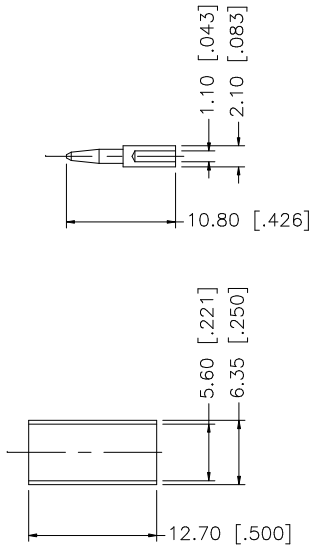

NOTE:

1. CRIMPED FERRULE
   HEX CRIMP SIZE .213"
2. CRIMPED CONTACT PIN
   HEX CRIMP SIZE .068"
   OR CONTACT PIN TO SOLDER.

	DESCRIPTION	MATERIAL	FINISH	QTY
8				
7				
6	COVER	P.E.	BLUE	1
5	HEX NUT	BRASS	NEXCOTE	1
4	FERRULE	COPPER	NEXCOTE	1
3	CONTACT PIN	BER. COPPER	SILVER	1
2	INSULATOR	TEFLON	NATURAL	1
1	BODY	BRASS	NEXCOTE	1

UNLESS OTHERWISE SPECIFIED DIMENSIONS ARE IN MILLIMETERS. DIMENSIONS IN [ ] ARE IN INCHES AND FOR CUSTOMER REFERANCE ONLY.

UNLESS OTHERWISE SPECIFIED TOLERANCES FOR MILLIMETERS ARE:
0.5 – 8mm ± 0.20mm
8 – 30mm ± 0.40mm
30 – 120mm ± 0.50mm

UNLESS OTHERWISE SPECIFIED TOLERANCES FOR INCHES ARE:
.020 – .315 = ± 0.007"
.315 – 1.180 = ± 0.015"
1.180 – 4.724 = ± 0.020"

DO NOT SCALE DRAWING

APPROVALS		DATE
DRAWN	G.R.S.	12/28/05
CHECKED		
ISSUED		
SHEET	1 OF 1	
CAD FILE	C:/272/272152.DWG	

Amphenol Connex

PART DESCRIPTION
7/16 CRIMP BULKHEAD JACK
(FOR RG-400/U CABLE)

PART NO. 272152

DWG. NO. 272152.DWG | REV. B | SIZE A | SCALE NA