THIS DRAWING IS UNPUBLISHED. RELEASED FOR PUBLICATION - , - .
© COPYRIGHT - By - ALL RIGHTS RESERVED.

LOC	DIST
AD	00

REVISIONS

P	LTR	DESCRIPTION	DATE	DWN	APVD
	B2	REVISED PER ECO-11-011262	06JUN11	HMR	MW

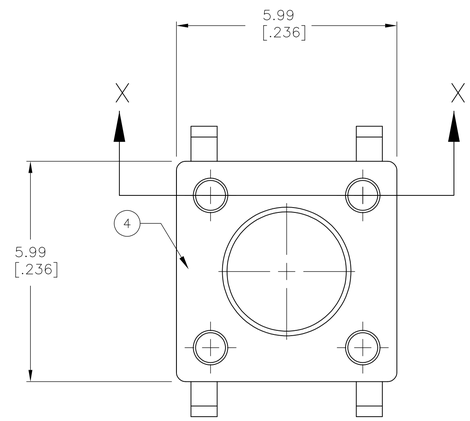

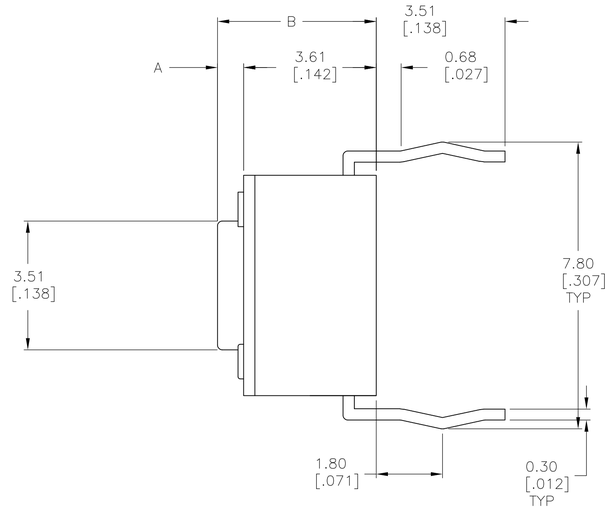

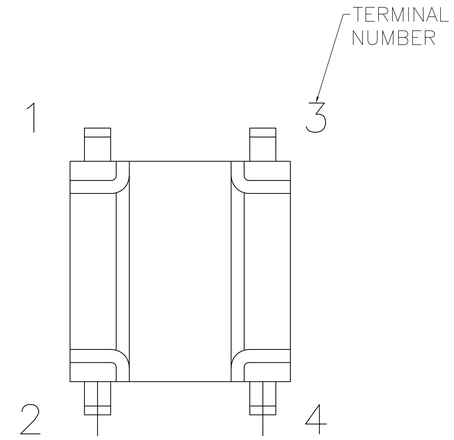

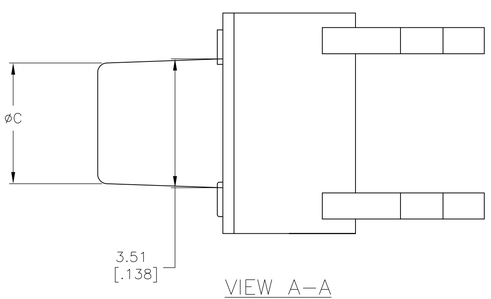

VIEW A–A
FSM6J THRU FSM18J

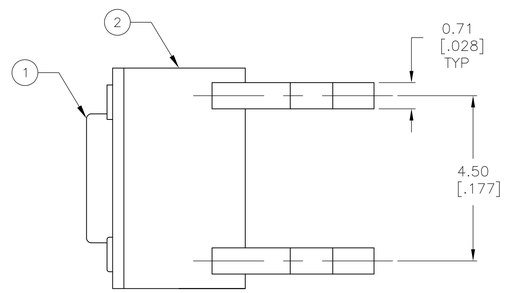

SPECIFICATIONS:

MATERIALS:
CASE: NYLON 66, BLACK
ACTUATOR: NYLON 66 OR PPS, SEE P/N TABLE
COVER: STEEL, TIN FINISH
MOVING CONTACT: COPPER ALLOY–SILVER FINISH
FIXED CONTACT/TERMINAL: COPPER ALLOY–SILVER OVER NICKEL FINISH

ELECTRICAL:
MAX CONTACT RATING: 50MILLIAMPS@24V DC,
MIN CONTACT RATING: 10MICROAMPS@1V DC
INITIAL CONTACT RESISTANCE, 100 MILLIOHMS MAX
INSULATION RESISTANCE, 100 MEGOHM MIN. @ 100V DC
DIELECTRIC STRENGTH, 500 V AC FOR 1 MINUTE
LIFE EXPECTANCY, 100,000 CYCLES MIN (2 CYCLES PER SECOND AND 150% ACTUATION FORCE), EXCEPT FOR THE 520 GF MODEL WHICH WOULD BE 50,000 CYCLES MIN.

MECHANICAL:
ACTUATION FORCE, SEE TABLE
ACTUATION TRAVEL, .010 +.008/–.004
LIFE EXPECTANCY, 100,000 CYCLES MIN (2 CYCLES PER SECOND AND 150% ACTUATION FORCE), EXCEPT FOR THE 520 GF MODEL WHICH WOULD BE 50,000 CYCLES MIN.

ENVIRONMENTAL:
OPERATING TEMPERATURE, –35 TO +85 DEGREES C
STORAGE TEMPERATURE, –35 TO +85 DEGREES C
THERMAL SHOCK, PER EIA–364–32C, –35 TO +85 DEGREES C
SOLDERABILITY, PER EIA–364–52, CLASS 2, CATEGORY 1, CATEGORY 2, 95% MINIMUM COVERAGE
RESISTANCE TO SOLDER HEAT, PER 109–202, CONDITION B

Notes:
1. ALL MATERIALS AND FINISHES SHALL COMPLY WITH EU DIRECTIVE 2002/95/EC OF 27JAN2003 (ROHS).

	ACTUATOR MAT'L	ACTUATOR COLOR	ACTUATION FORCE	DIM C	DIM B	DIM A	ALCO P/N	TE P/N
	NYLON 6T	YELLOW	520 +/–100 GF	3.09 (.122)	8.50 (.335)	4.90 (.193)	FSM18JAAHX	3–1977120–7
	NYLON 6T	WHITE	260 +/–50 GF	3.09 (.122)	8.50 (.335)	4.90 (.193)	FSM18JAHX	3–1977120–6
	PPS	BLACK	160 +/–50 GF	3.09 (.122)	8.50 (.335)	4.90 (.193)	FSM18JHX	3–1977120–5
	PPS	BROWN	100 +/–50 GF	3.09 (.122)	8.50 (.335)	4.90 (.193)	FSM18JLHX	3–1977120–4
	NYLON 6T	YELLOW	520 +/–100 GF	2.80 (.110)	17.00 (.669)	13.40 (.527)	FSM16JAAHX	3–1977120–3
OBSOLETE	NYLON 6T	WHITE	260 +/–50 GF	2.80 (.110)	17.00 (.669)	13.40 (.527)	FSM16JAHX	~~3–1977120–2~~
	PPS	BLACK	160 +/–50 GF	2.80 (.110)	17.00 (.669)	13.40 (.527)	FSM16JHX	3–1977120–1
	PPS	BROWN	100 +/–50 GF	2.80 (.110)	17.00 (.669)	13.40 (.527)	FSM16JLHX	3–1977120–0
	NYLON 6T	YELLOW	520 +/–100 GF	2.87 (.118)	13.00 (.512)	9.40 (.370)	FSM14JAAHX	2–1977120–9
	NYLON 6T	WHITE	260 +/–50 GF	2.87 (.118)	13.00 (.512)	9.40 (.370)	FSM14JAHX	2–1977120–8
	PPS	BLACK	160 +/–50 GF	2.87 (.118)	13.00 (.512)	9.40 (.370)	FSM14JHX	2–1977120–7
	PPS	BROWN	100 +/–50 GF	2.87 (.118)	13.00 (.512)	9.40 (.370)	FSM14JLHX	2–1977120–6
	NYLON 6T	YELLOW	520 +/–100 GF	3.20 (.126)	8.00 (.315)	4.40 (.173)	FSM12JAAHX	2–1977120–5
	PPS	BLACK	260 +/–50 GF	3.20 (.126)	8.00 (.315)	4.40 (.173)	FSM12JABHX	2–1977120–4
OBSOLETE	NYLON 6T	WHITE	260 +/–50 GF	3.20 (.126)	8.00 (.315)	4.40 (.173)	FSM12JAHX	~~2–1977120–3~~
OBSOLETE	PPS	BLACK	160 +/–50 GF	3.20 (.126)	8.00 (.315)	4.40 (.173)	FSM12JHX	~~2–1977120–2~~
OBSOLETE	PPS	BROWN	100 +/–50 GF	3.20 (.126)	8.00 (.315)	4.40 (.173)	FSM12JLHX	~~2–1977120–1~~
	NYLON 6T	YELLOW	520 +/–100 GF	3.25 (.128)	7.30 (.287)	3.70 (.146)	FSM10JAAHX	2–1977120–0
	NYLON 6T	WHITE	260 +/–50 GF	3.25 (.128)	7.30 (.287)	3.70 (.146)	FSM10JAHX	1–1977120–9
OBSOLETE	PPS	BLACK	160 +/–50 GF	3.25 (.128)	7.30 (.287)	3.70 (.146)	FSM10JHX	~~1–1977120–8~~
	PPS	BROWN	100 +/–50 GF	3.25 (.128)	7.30 (.287)	3.70 (.146)	FSM10JLHX	1–1977120–7
	NYLON 6T	YELLOW	520 +/–100 GF	3.10 (.122)	9.50 (.374)	5.90(.232)	FSM8JAAHX	1–1977120–6
	NYLON 6T	WHITE	260 +/–50 GF	3.10 (.122)	9.50 (.374)	5.90(.232)	FSM8JAHX	1–1977120–5
	PPS	BLACK	160 +/–50 GF	3.10 (.122)	9.50 (.374)	5.90(.232)	FSM8JHX	1–1977120–4
	PPS	BROWN	100 +/–50 GF	3.10 (.122)	9.50 (.374)	5.90(.232)	FSM8JLHX	1–1977120–3
	NYLON 6T	YELLOW	520 +/–100 GF	3.30(.130)	7.00 (.276)	3.40 (.134)	FSM6JAAHX	1–1977120–2
	NYLON 6T	WHITE	260 +/–50 GF	3.30(.130)	7.00 (.276)	3.40 (.134)	FSM6JAHX	1–1977120–1
	PPS	BLACK	160 +/–50 GF	3.30(.130)	7.00 (.276)	3.40 (.134)	FSM6JHX	1–1977120–0
	PPS	BROWN	100 +/–50 GF	3.30(.130)	7.00 (.276)	3.40 (.134)	FSM6JLHX	1977120–9
	NYLON 6T	YELLOW	520 +/–100 GF	N/A	5.00 (.196)	1.40 (.055)	FSM4JAAHX	1977120–8
	NYLON 6T	WHITE	260 +/–50 GF	N/A	5.00 (.196)	1.40 (.055)	FSM4JAHX	1977120–7
	PPS	BLACK	160 +/–50 GF	N/A	5.00 (.196)	1.40 (.055)	FSM4JHX	1977120–6
	PPS	BROWN	100 +/–50 GF	N/A	5.00 (.196)	1.40 (.055)	FSM4JLHX	1977120–5
	NYLON 6T	YELLOW	520 +/–100 GF	N/A	4.30 (.169)	0.70 (.028)	FSM2JAAHX	1977120–4
	NYLON 6T	WHITE	260 +/–50 GF	N/A	4.30 (.169)	0.70 (.028)	FSM2JAHX	1977120–3
	PA6T	GRAY	160 +/–50 GF	N/A	4.30 (.169)	0.70 (.028)	FSM2JHX	1977120–2
	PPS	BROWN	100 +/–50 GF	N/A	4.30 (.169)	0.70 (.028)	FSM2JLHX	1977120–1

( )–INDICATES MOMENTARY POSITION

CIRCUIT CHARACTERISTICS

CONTACT POSITION		CIRCUIT DIAGRAM
OFF	(ON) 1–3 2–4	1 2 3 4

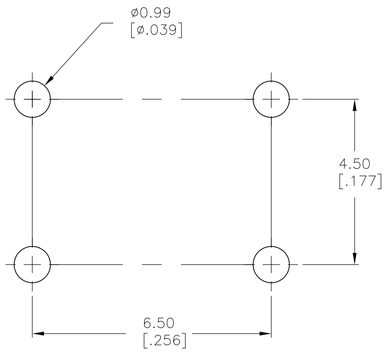

RECOMMENDED HOLE LAYOUT
TOLERANCE ±0.05[.002] UNLESS OTHERWISE NOTED

THIS DRAWING IS A CONTROLLED DOCUMENT.

DIMENSIONS: mm [INCHES]

TOLERANCES UNLESS OTHERWISE SPECIFIED:
0 PLC ± –
1 PLC ± –
2 PLC ± 0.30 [.012]
3 PLC ± –
4 PLC ± –
ANGLES ± –

MATERIAL: SEE SPECIFICATIONS
FINISH: –

DWN M.BINNER 07JUN07
CHK M.SARVER 07JUN07
APVD M.SARVER 07JUN07
PRODUCT SPEC –
APPLICATION SPEC –
WEIGHT –

TE Connectivity

NAME: 6MM TACT SWITCH, THRU–HOLE HIGH TEMP –

SIZE A1 | CAGE CODE 00779 | DRAWING NO C–1977120 | RESTRICTED TO –

CUSTOMER DRAWING | SCALE 12:1 | SHEET 1 OF 1 | REV B2

4805 (3/11)