THIS DRAWING IS UNPUBLISHED. RELEASED FOR PUBLICATION 20
© COPYRIGHT 20 BY TYCO ELECTRONICS CORPORATION. ALL RIGHTS RESERVED.

PART NUMBER	REV	TERMINATOR	FEED TYPE	DESCRIPTION
1426594-1	B	LEADMAKER	MECH POST FEED	CUTS CARRIER
1426594-2	B	BENCH	MECH PRE FEED	CUTS CARRIER
1426594-6	B	LEADMAKER	MECH POST FEED	CONTINUOUS CARRIER
7-1426594-1	B	LEADMAKER	MECH POST FEED	-1 AND SPARE PARTS
7-1426594-2	B	BENCH	MECH PRE FEED	-2 AND SPARE PARTS
7-1426594-6	B	LEADMAKER	MECH POST FEED	-6 AND SPARE PARTS
7-1426594-7	B	-	-	SPARE PARTS KIT

SET UP GAGE 458637-3

LOC	DIST
A	66

REVISIONS

P	LTR	DESCRIPTION	DATE	DWN	APVD
	A	SEE ECO-06-006242	16MAR2006	DP	MC
	B	SEE ECR-06-011867	17MAY2006	DP	MC

CRIMP DATA AMPHENOL TERMINAL TYCO CRIMP SPECS 7

TERMINAL NAME: PIN CONTACT

CRIMP	SIZE	TYPE	RANGE
WIRE	1.78 [.070 IN]	F	0.50mm² -1.00mm²
INSUL	2.29 [.090 IN]	O	1.20-2.10 [.047-.083 IN]

WIRE STRIP LENGTH 3.60-4.40 [.142-.174 IN]

APPL INSTRUCTIONS 408-8322

TERMINAL APPL SPEC - - - -

FEED 9.00 [.354 IN]

TERMINALS APPLIED

TYCO PN	MANUF'S PN	-	-
1572940-1	TN 01 015 0047 1	-	-
6 1572941-1	TN 02 015 0047 1	-	-
-	-	-	-
-	-	-	-

WIRE SIZE	CRIMP HEIGHT	PIN PN & LENGTH [IN]
1.00mm²	1.45 ±0.05 [.057 ±.002 IN]	1-354779-0 [.3040]
0.75mm²	1.32 ±0.05 [.052 ±.002 IN]	2-354779-2 [.3100]
0.50mm²	1.22 ±0.05 [.048 ±.002 IN]	3-354779-0 [.3140]
-	-	-
-	-	-
-	-	-
-	-	-
-	-	-
-	-	-
-	-	-
-	-	-
-	-	-

1. RECOMMENDED SPARE PARTS.
2. GREASE RAM, CAM, CAM FOLLOWER AND FEED ROD LIGHTLY.
3. CERTAIN TERMINALS REQUIRE LUBRICATION. REFER TO THE APPLICATOR INSTRUCTION SHEET FOR MORE INFORMATION.
4. LUBRICATE DAILY PER THE APPLICATOR INSTRUCTION SHEET SUPPLIED WITH THE APPLICATOR.
5. ITEM 53, CUT TO LENGTH AT ASSEMBLY.
6. ITEM 51, HOLD DOWN BUMPER NOT TO BE USED ON TERMINAL PN TN 02 015 0047 1.
7. ALL CRIMP DATA CALCULATED BY TYCO ELECTRONICS.

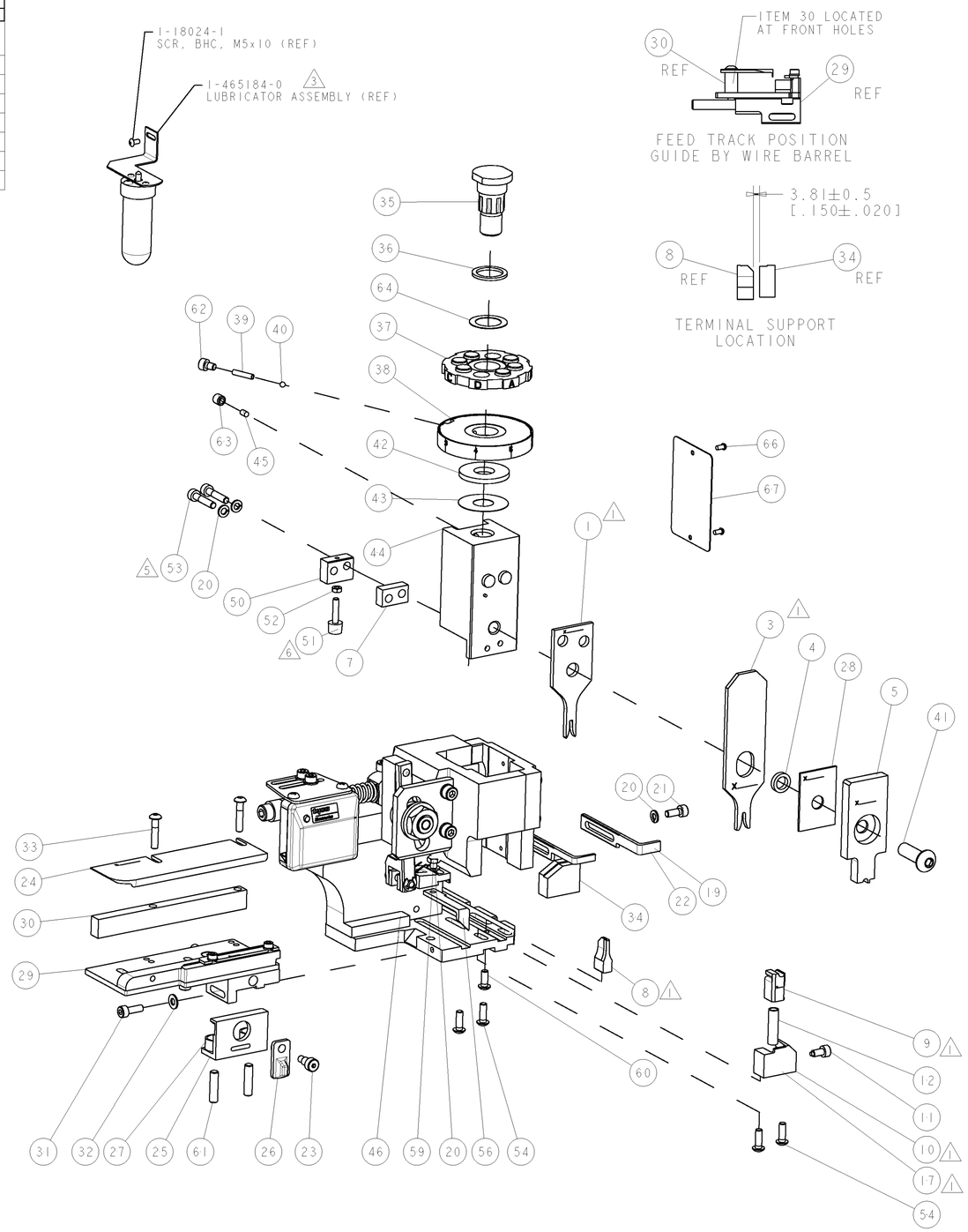

-	-	-	-	-	-	-	-	-	73
-	-	-	-	-	-	-	-	-	72
-	1	1	1	1	1	1	1338705-1	DOCUMENTATION PACKAGE	71
-	-	-	-	-	-	-	-	-	70
-	-	-	-	-	-	-	-	-	69
-	-	-	-	-	-	-	-	-	68
-	1	1	1	1	1	1	461264-1	PLATE, IDENTIFICATION	67
-	2	2	2	2	2	2	21017-2	SCREW, DRIVE	66
-	-	-	-	-	-	-	-	-	65
-	1	1	1	1	1	1	986950-1	WASHER, FLAT PRECISION	64
-	1	1	1	1	1	1	3-18031-0	SCR, SET, CUP POINT M6 X 6.0	63
-	1	1	1	1	1	1	18023-9	SCR, SKT HD CAP M4 X 6.0	62
-	2	2	2	2	2	2	2-18032-5	SCR, SET, FLT POINT M5 X 20.0	61
-	1	1	1	1	1	1	18024-7	SCR, BTN SKT HD CAP (M4 X 10.0)	60
-	1	1	1	1	1	1	5-18022-2	SCR, HEX HD CAP M4 X 8.0	59
-	-	-	-	-	-	-	-	-	58
-	-	-	-	-	-	-	-	-	57
-	1	1	1	1	1	1	1338685-1	PAWL, FEED	56
-	-	-	-	-	-	-	-	-	55
-	4	4	4	4	4	4	18024-8	SCR, BTN SKT HD CAP (M4 X 12.0)	54
5 -	2	2	2	2	2	2	1-18023-4	SCR, SKT HD CAP M4 X 20.0	53
-	1	1	1	1	1	1	18030-1	NUT, HEX, REG M3	52
6 -	1	1	1	1	1	1	811242-5	BUMPER, HOLD DOWN	51
-	1	1	1	1	1	1	690753-2	SPACER, TONKER	50
-	1	1	1	1	1	1	18024-3	SCR, BTN SKT HD CAP (M3 X 10.0)	49
-	-	1	-	-	1	-	1338675-1	CAM, UNIVERSAL PRE FEED	48
-	1	-	1	1	-	1	1338676-1	CAM, UNIVERSAL POST-FEED	47
-	1	1	1	1	1	1	1320999-3	APPLICATOR SUBASSEMBLY, HDI	46
-	1	1	1	1	1	1	690191-1	PLUG,NYLON	45
-	1	1	1	1	1	1	1338660-1	RAM	44
-	1	1	1	1	1	1	690125-1	SHIM SUB-ASSY	43
-	1	1	1	1	1	1	690124-1	WASHER, RAM (.115)	42
-	1	1	1	1	1	1	2-18024-6	SCR, BTN SKT HD CAP (M8 X 25.0)	41
-	1	1	1	1	1	1	23241-1	BALL, STEEL	40
-	1	1	1	1	1	1	2-22278-7	SPRING, COMPRESSION	39
-	1	1	1	1	1	1	1320922-1	DISC, ADJUST, INSULATION CRIMP	38
-	1	1	1	1	1	1	354777-1	WIRE DISC, ASSEMBLY	37
-	1	1	1	1	1	1	22480-5	SPRING, COMPRESSION	36
-	1	1	1	1	1	1	690212-1	POST, RAM	35
-	1	1	1	1	1	1	1333246-4	SUPPORT, TERMINAL	34
-	2	2	2	2	2	2	1-18024-0	SCR, BTN SKT HD CAP (M4 X 20.0)	33
-	1	1	1	1	1	1	18027-2	WASHER, FLAT, REG M4	32
-	1	1	1	1	1	1	1-18023-2	SCR, SKT HD CAP M4 X 12.0	31
-	1	1	1	1	1	1	1-1320908-5	SPACER, STRIP GUIDE	30
-	1	1	1	1	1	1	1633073-1	STRIP GUIDE ASSEMBLY	29
-	1	1	1	1	1	1	1-455888-0	SPACER, CRIMPER	28
-	2	2	2	2	2	2	1-22284-0	SPRING, COMPRESSION	27
-	1	1	1	1	1	1	356835-1	LEVER, DRAG RELEASE	26
-	1	1	1	1	1	1	240792-1	DRAG, TERMINAL	25
-	1	1	1	1	1	1	1320928-1	PLATE, STRIP GUIDE	24
-	1	1	1	1	1	1	980371-4	SCR, SKT HD SHLDR 5.0 DIA X 6.0	23
-	1	-	1	1	-	1	690472-2	STRIPPER	22
-	1	1	1	1	1	1	1-18023-1	SCR, SKT HD CAP M4 X 10.0	21
-	4	4	4	4	4	4	18025-2	WASHER, SPRG LOCK, REG M4	20
-	-	1	-	-	1	-	690472-1	STRIPPER	19
-	-	-	-	-	-	-	-	-	18
1 -	1	-	-	1	-	-	1338684-1	SHEAR HOLDER, FRONT	17
-	-	-	-	-	-	-	-	-	16
-	-	-	-	-	-	-	-	-	15
-	-	-	-	-	-	-	-	-	14
-	-	-	-	-	-	-	-	-	13
-	1	1	1	1	1	1	3-22280-3	SPRING, COMPRESSION	12
-	1	1	1	1	1	1	356885-4	STOP, SHEAR	11
1 -	-	1	1	-	1	1	1320921-1	SHEAR HOLDER, FRONT, CUT	10
1 -	1	1	1	1	1	1	462006-7	FLOATING SHEAR, FRONT	9
1 1	2	2	2	1	1	1	1633130-9	ANVIL, COMBINATION .070	8
-	1	1	1	1	1	1	2-240641-5	SPACER	7
-	-	-	-	-	-	-	-	-	6
-	1	1	1	1	1	1	2-455889-0	DEPRESSOR, SHEAR	5
-	1	1	1	1	1	1	238011-9	BLOCK, CRIMPER SPACER	4
1 1	2	2	2	1	1	1	8-456135-0	CRIMPER, INSULATION O PREMIUM	3
-	-	-	-	-	-	-	-	-	2
1 1	2	2	2	1	1	1	3-456404-5	CRIMPER, WIRE PREMIUM	1
-77	-76	-72	-71	-6	-2	-1	PART NO	DESCRIPTION	ITEM NO

VIEW B ROTATED 180°

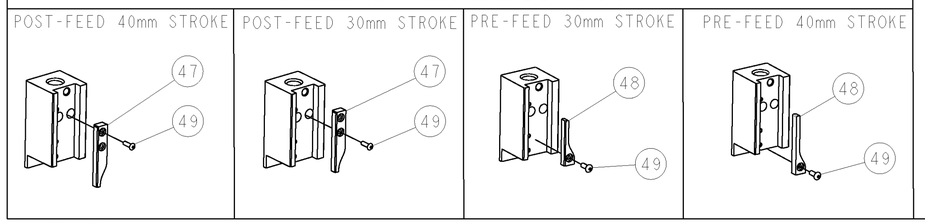

-	-	-	-	-	-	-	-	-	84
-	-	-	-	-	-	-	-	-	83
-	-	-	-	-	-	-	-	-	82
-	-	-	-	-	-	-	-	-	81
-	-	-	-	-	-	-	-	-	80
-	-	-	-	-	-	-	-	-	79
-	-	-	-	-	-	-	-	-	78
-	-	-	-	-	-	-	-	-	77
-	-	-	-	-	-	-	-	-	76
-	-	-	-	-	-	-	-	-	75
-	-	-	-	-	-	-	-	-	74
-77	-76	-72	-71	-6	-2	-1	PART NO	DESCRIPTION	ITEM NO

THIS DRAWING IS A CONTROLLED DOCUMENT FOR TYCO ELECTRONICS CORPORATION. IT IS SUBJECT TO CHANGE AND THE CONTROLLING ENGINEERING ORGANIZATION SHOULD BE CONTACTED FOR THE LATEST REVISION.

DIMENSIONS: mm [IN]

TOLERANCES UNLESS OTHERWISE SPECIFIED:
0 PLC ±-
1 PLC ±-
2 PLC ±-
3 PLC ±-
4 PLC ±-
ANGLES ±-

MATERIAL - -

FINISH - -

DWN 01FEB2006 D.PROUSE
CHK -
APVD 01FEB2006 M.CLIFFORD
PRODUCT SPEC -
APPLICATION SPEC See Table
WEIGHT -

tyco Electronics
Tyco Electronics
Harrisburg, PA 17105-3608

NAME SIDE FEED HDI APPLICATOR

SIZE A1 | CAGE CODE 00779 | DRAWING NO C-1426594 | RESTRICTED TO -

CUSTOMER DRAWING | SCALE 3:5 | SHEET 1 OF 1 | REV B

AMP 4805 REV 31MAR2000

Pro/ENGINEER DRAWING