THIS DRAWING IS UNPUBLISHED. RELEASED FOR PUBLICATION SEP ,2005.
© COPYRIGHT 2005 By – ALL RIGHTS RESERVED.

| LOC | DIST |
|---|---|
| — | — |

REVISIONS
変更

| P | LTR | DESCRIPTION | DATE | DWN | APVD |
|---|---|---|---|---|---|
| | S | REVISED PER ECR-15-016490 | 11NOV2015 | T.Z | H.W |

1 CONTACT COPLANALITY IS 0.1 MAX.
2 THIS DIMENSION MEANS CENTER OF THE POCKET.
3 M3 TAPPING + BVTP RECOMMENDED TORQUE: 68.6N (7Kgf) MAX.
4 FINISH
CONTACT: V μm MIN. Au PL. ON CONTACT AREA (V: SEE TABLE)
0.03~0.1 μm Au PL. ON TERMINAL AREA
Ni UNDER PL. ALL OVER
SHELL: Sn PL. (MATTE) ALL OVER
Ni UNDER PL. ALL OVER
5 SCREW SIZE
6 QTY PRINT ON THE LABEL. (EMBOSS PACKING)

1 コンタクトコプラナリティーは 0.1 以下。
2 本寸法はポケットの中心を表す。
3 M3 TAPPING + BVTP 推奨トルク: 68.6N (7Kgf) 以下。
4 仕上
コンタクト: コンタクトエリアに V μm 以上の 金めっき (V: 表参照)
ターミナルエリアに 0.03~0.1 μm の金めっき
ニッケル下地めっきを施す
シェル: すずめっき (つや消し)
ニッケル下地めっきを施す
5 スクリューサイズ
6 数量はラベルに印字される (EMBOSS 梱包)

| V | U | T | AA | S | R | P | N | M | L | K | J | H | G | F | E | POLYIMIDE TAPE | FLANGE | SHELL TYPE | CONNECTOR | PACKING | PART NUMBER |
|---|---|---|---|---|---|---|---|---|---|---|---|---|---|---|---|---|---|---|---|---|---|
| 4 Au PL. | 5 SCREW SIZE | QTY | DIMENSION | | | | | | | | | | | | | PART LIST | | | | | |
| 0.3 | – | 6 70 | 1.9 | – | – | – | – | 33.5 | 37.5 | 9.32 | 0.4 | 32 | 28.4 | 14.2 | 16 | WITHOUT TAPE | WITHOUT FLANGE | THROUGH HOLE | (SEE SHEET 2) | SOFT TRAY (SEE SHEET 11) | 6-1903015-3 |
| 0.76 | M3 x 0.5 | 70 | 1.9 | 46 | 138 | 6-23 | 46 | – | – | – | – | – | – | – | – | WITH TAPE | WITH FLANGE | THROUGH HOLE | (SEE SHEET 3) | SOFT TRAY (SEE SHEET 7) | 9-1903015-4 |
| 0.3 | M3 x 0.5 | 6 200 | 1.9 | – | – | – | – | 45.5 | 49.5 | 18.3 | 0.5 | 44 | 40.4 | 20.2 | 20 | WITH TAPE | WITH FLANGE | THROUGH HOLE | (SEE SHEET 3) | EMBOSS (SEE SHEET 6) | 9-1903015-3 |
| 0.3 | M3 x 0.5 | 70 | 1.9 | – | – | – | – | – | – | – | – | – | – | – | – | WITHOUT TAPE | WITH FLANGE | THROUGH HOLE | (SEE SHEET 3) | SOFT TRAY (SEE SHEET 10) | 8-1903015-4 |
| 0.1 | – | 6 550 | 1.9 | – | – | – | – | 33.5 | 37.5 | 9.32 | 0.4 | 32 | 28.4 | 14.2 | 16 | WITHOUT TAPE | WITHOUT FLANGE | THROUGH HOLE | (SEE SHEET 2) | EMBOSS (SEE SHEET 6) | 7-1903015-1 |
| 0.3 | M3 x 0.5 | 6 200 | 1.9 | – | – | – | – | 45.5 | 49.5 | 18.3 | 0.5 | 44 | 40.4 | 20.2 | 20 | WITHOUT TAPE | WITH FLANGE | FULL SMT | (SEE SHEET 5) | EMBOSS (SEE SHEET 6) | 5-1903015-9 |
| 0.3 | – | 6 550 | 0.8 | – | – | – | – | 33.5 | 37.5 | 9.32 | 0.4 | 32 | 28.4 | 14.2 | 16 | WITHOUT TAPE | WITHOUT FLANGE | THROUGH HOLE | (SEE SHEET 2) | EMBOSS (SEE SHEET 6) | 5-1903015-5 |
| 0.3 | M3 x 0.5 | 70 | 1.9 | 46 | 138 | 6-23 | 46 | – | – | – | – | – | – | – | – | WITHOUT TAPE | WITH FLANGE | THROUGH HOLE | (SEE SHEET 3) | SOFT TRAY (SEE SHEET 7) | 5-1903015-4 |
| 0.3 | M3 x 0.5 | 6 200 | 1.9 | – | – | – | – | 45.5 | 49.5 | 18.3 | 0.5 | 44 | 40.4 | 20.2 | 20 | WITHOUT TAPE | WITH FLANGE | THROUGH HOLE | (SEE SHEET 3) | EMBOSS (SEE SHEET 6) | 5-1903015-3 |
| ~~0.3~~ | ~~3 ø2.65±0.3~~ | ~~70~~ | ~~1.9~~ | ~~46~~ | ~~138~~ | ~~6-23~~ | ~~46~~ | ~~–~~ | ~~–~~ | ~~–~~ | ~~–~~ | ~~–~~ | ~~–~~ | ~~–~~ | ~~–~~ | ~~WITHOUT TAPE~~ | ~~WITH FLANGE~~ | ~~THROUGH HOLE~~ | ~~(SEE SHEET 3)~~ | SOFT TRAY (SEE SHEET 7) | ~~5-1903015-2~~ |
| 0.3 | – | 6 400 | 1.9 | – | – | – | – | 33.5 | 37.5 | 9.32 | 0.4 | 32 | 28.4 | 14.2 | 16 | WITHOUT TAPE | WITHOUT FLANGE | THROUGH HOLE | (SEE SHEET 2) | EMBOSS (SEE SHEET 6) | 5-1903015-1 |
| 0.3 | M3 x 0.5 | 70 | 1.0 | 46 | 138 | 6-23 | 46 | – | – | – | – | – | – | – | | WITHOUT TAPE | WITH FLANGE | THROUGH HOLE | (SEE SHEET 3) | SOFT TRAY (SEE SHEET 7) | 4-1903015-1 |
| 0.76 | – | 6 400 | 1.2 | – | – | – | – | 33.5 | 37.5 | 9.32 | 0.4 | 32 | 28.4 | 14.2 | 16 | WITHOUT TAPE | WITHOUT FLANGE | THROUGH HOLE | (SEE SHEET 2) | EMBOSS (SEE SHEET 6) | 2-1903015-2 |
| 0.76 | M3 x 0.5 | 70 | 1.9 | – | – | – | – | – | – | – | – | – | – | – | – | WITHOUT TAPE | WITH FLANGE | THROUGH HOLE | (SEE SHEET 3) | SOFT TRAY (SEE SHEET 9) | 1903015-8 |
| 0.76 | 3 ø2.65±0.3 | 70 | 1.9 | – | – | – | – | – | – | – | – | – | – | – | – | WITHOUT TAPE | WITH FLANGE | THROUGH HOLE | (SEE SHEET 3) | SOFT TRAY (SEE SHEET 9) | 1903015-7 |
| 0.76 | M3 x 0.5 | 50 | 1.9 | 54.4 | 120 | 4-30 | 54.4 | – | – | – | – | – | – | – | – | WITHOUT TAPE | WITH FLANGE | THROUGH HOLE | (SEE SHEET 3) | SOFT TRAY (SEE SHEET 9) | 1903015-5 |
| 0.76 | M3 x 0.5 | 70 | 1.9 | 46 | 138 | 6-23 | 46 | – | – | – | – | – | – | – | – | WITHOUT TAPE | WITH FLANGE | THROUGH HOLE | (SEE SHEET 4) | SOFT TRAY (SEE SHEET 8) | 1903015-4 |
| 0.76 | M3 x 0.5 | 6 200 | 1.9 | – | – | – | – | 45.5 | 49.5 | 18.3 | 0.5 | 44 | 40.4 | 20.2 | 20 | WITHOUT TAPE | WITH FLANGE | THROUGH HOLE | (SEE SHEET 4) | EMBOSS (SEE SHEET 6) | 1903015-3 |
| 0.76 | 3 ø2.65±0.3 | 70 | 1.9 | 46 | 138 | 6-23 | 46 | – | – | – | – | – | – | – | – | WITHOUT TAPE | WITH FLANGE | THROUGH HOLE | (SEE SHEET 3) | SOFT TRAY (SEE SHEET 7) | 1903015-2 |
| 0.76 | – | 6 400 | 1.9 | – | – | – | – | 33.5 | 37.5 | 9.32 | 0.4 | 32 | 28.4 | 14.2 | 16 | WITHOUT TAPE | WITHOUT FLANGE | THROUGH HOLE | (SEE SHEET 2) | EMBOSS (SEE SHEET 6) | 1903015-1 |

THIS DRAWING IS A CONTROLLED DOCUMENT.

DIMENSIONS: 単位: 耗 mm

TOLERANCES UNLESS OTHERWISE SPECIFIED: 一般公差
0 PLC ±
1 PLC ±
2 PLC ±
3 PLC ±
4 PLC ±
ANGLES ±

MATERIAL 材料

FINISH 仕上

| | | |
|---|---|---|
| DWN | R.MURAYAMA | 26SEP2005 |
| CHK | T.KIMURA | 26SEP2005 |
| APVD | T.KIMURA | 26SEP2005 |
| PRODUCT SPEC 製品規格 | 108-78180-2 | |
| APPLICATION SPEC 取付適用規格 | | |
| WEIGHT | | |

TE Connectivity

NAME 名称: HDMI 19 POS RECEPTACLE ASSY SMT SHORT TYPE

| SIZE | CAGE CODE | DRAWING NO 番号 | RESTRICTED TO |
|---|---|---|---|
| A3 | 00779 | C-1903015 | — |

CUSTOMER DRAWING

| SCALE 尺度 | SHEET | REV |
|---|---|---|
| 4:1 | 1 OF 12 | S |

THIS DRAWING IS UNPUBLISHED. RELEASED FOR PUBLICATION SEP ,2005.
© COPYRIGHT 2005 By – ALL RIGHTS RESERVED.

| LOC | DIST |
|---|---|
| — | — |

REVISIONS 変更

| P | LTR | DESCRIPTION | DATE | DWN | APVD |
|---|---|---|---|---|---|
| | – | SEE SHEET 1 | – | — | — |

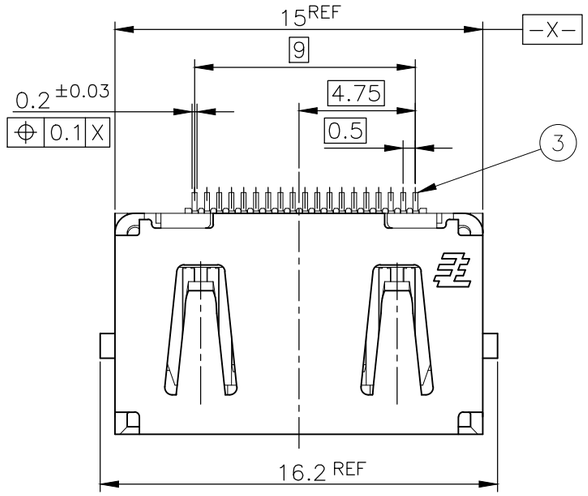


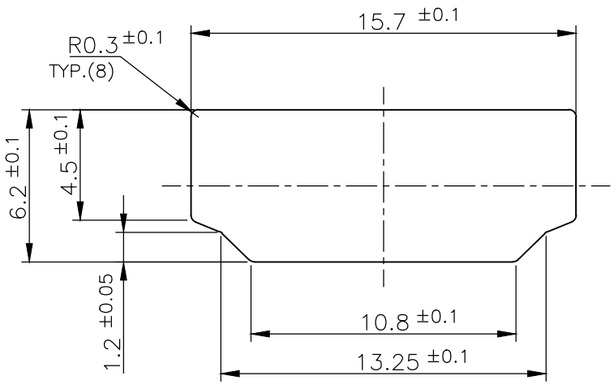


PANEL CUT OUT DIMENSION (REFERENCE)

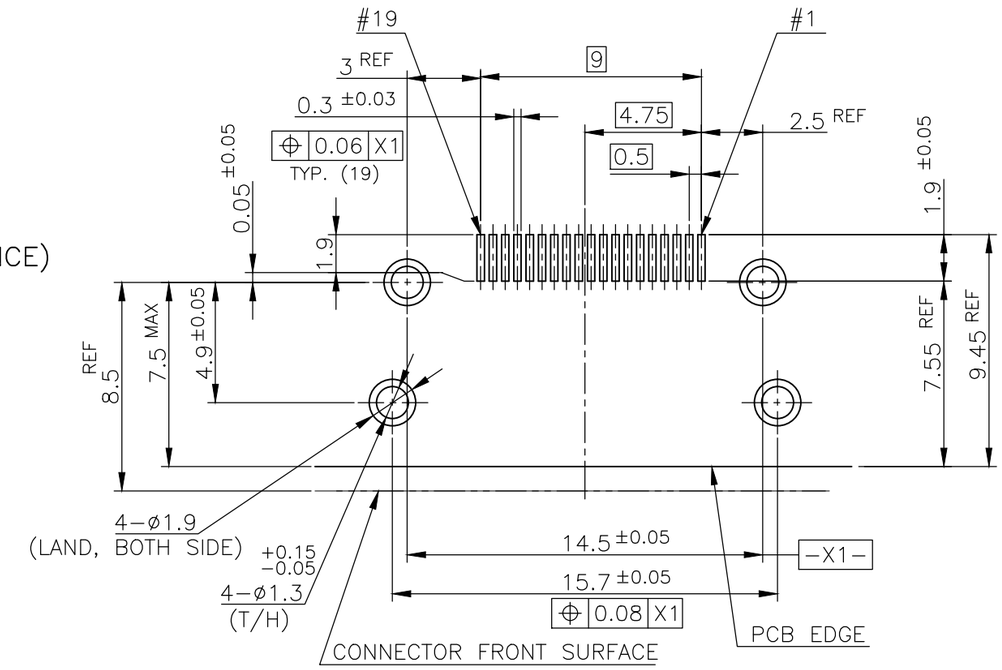


P.C.B LAYOUT (REFERENCE)
SHOWN AS CONNECTOR MOUNTING SIDE
TOLERANCE: NON–CUMULATIVE

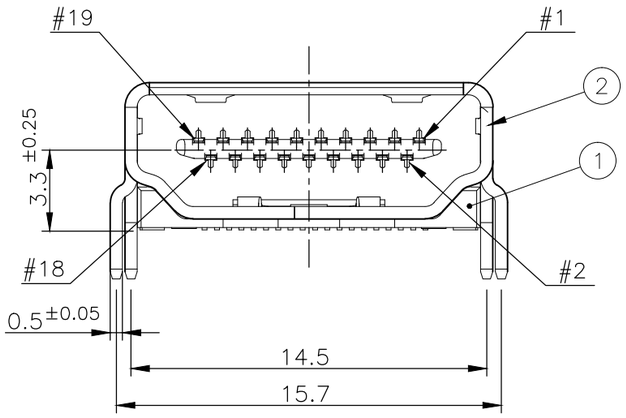


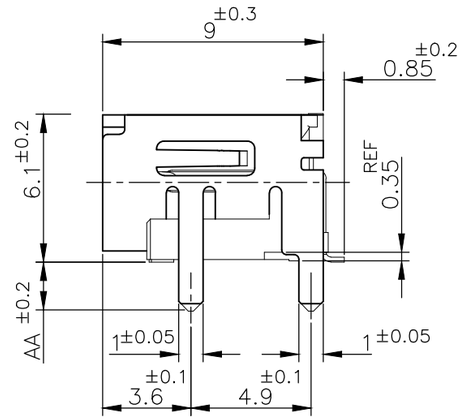


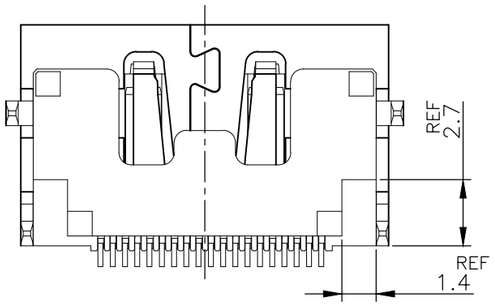


CONNECTOR: WITHOUT FLANGE THROUGH HOLE TYPE

| MATERIAL | DESCRIPTION | ITEM |
|---|---|---|
| BRASS | CONTACT | 3 |
| PHOSPHOR BRONZE | SHELL | 2 |
| GLASS FILLED LCP UL94V–0, BLACK COLOR | HOUSING | 1 |

THIS DRAWING IS A CONTROLLED DOCUMENT.

DIMENSIONS: 単位： 粍 mm

TOLERANCES UNLESS OTHERWISE SPECIFIED: 一般公差
0 PLC ±
1 PLC ±
2 PLC ±
3 PLC ±
4 PLC ±
ANGLES ±

MATERIAL 材料
FINISH 仕上

DWN
CHK
APVD
PRODUCT SPEC 製品規格
APPLICATION SPEC 取付適用規格
WEIGHT

TE Connectivity

NAME 名称: HDMI 19 POS RECEPTACLE ASSY SMT SHORT TYPE

| SIZE | CAGE CODE | DRAWING NO 番号 | RESTRICTED TO |
|---|---|---|---|
| A3 | 00779 | C–1903015 | — |

CUSTOMER DRAWING | SCALE 尺度 4:1 | SHEET 2 OF 12 | REV S

THIS DRAWING IS UNPUBLISHED. RELEASED FOR PUBLICATION SEP ,2005.
© COPYRIGHT 2005 By – ALL RIGHTS RESERVED.

| LOC | DIST |
|---|---|
| — | — |

REVISIONS 変更

| P | LTR | DESCRIPTION | DATE | DWN | APVD |
|---|---|---|---|---|---|
| | – | SEE SHEET 1 | – | – | – |

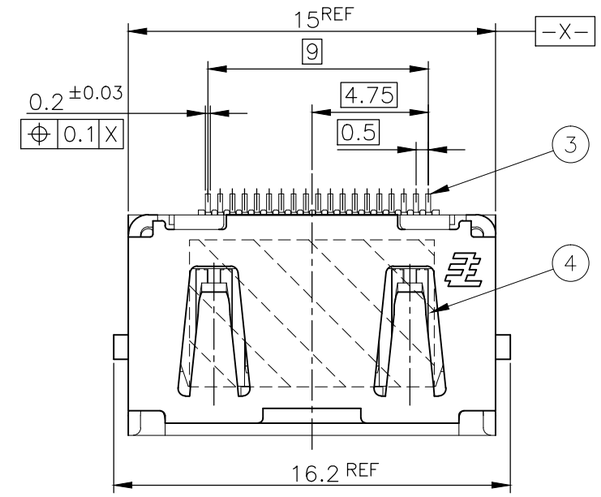


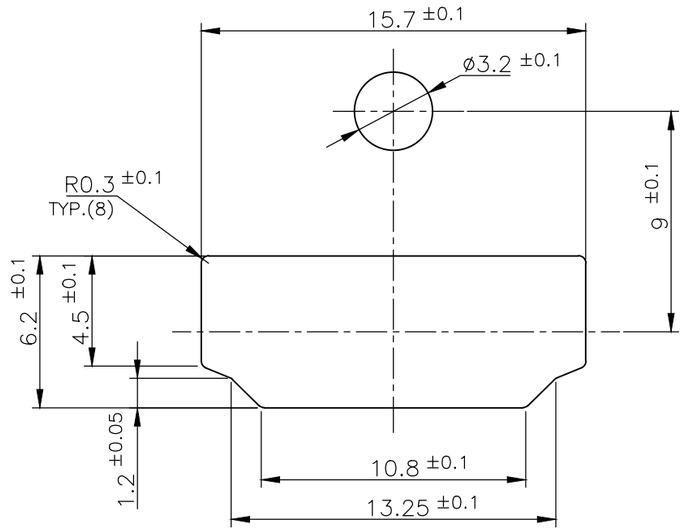


PANEL CUT OUT DIMENSION (REFERENCE)

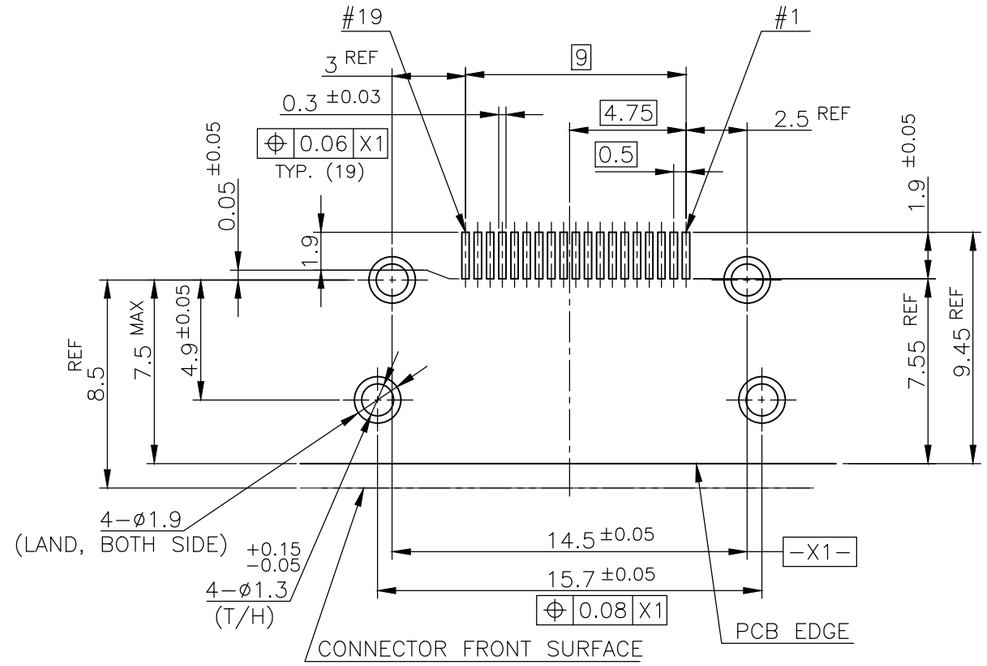


P.C.B LAYOUT (REFERENCE)
SHOWN AS CONNECTOR MOUNTING SIDE
TOLERANCE: NON–CUMULATIVE

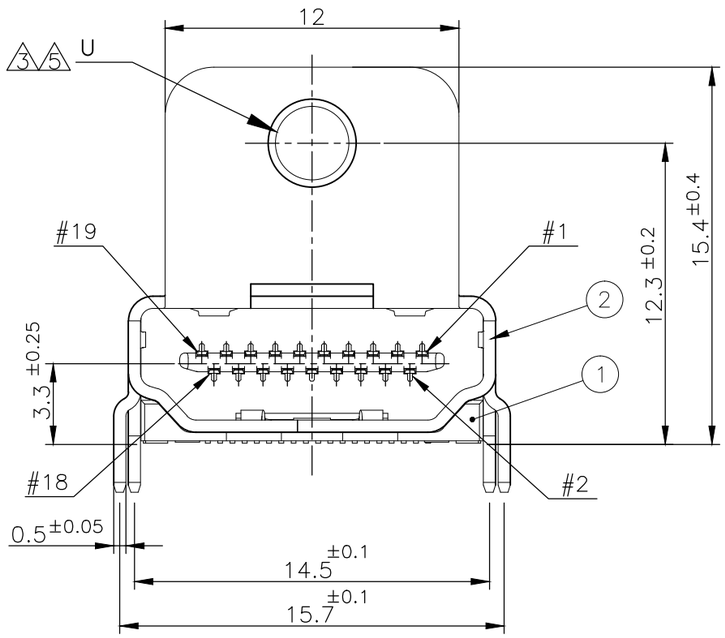


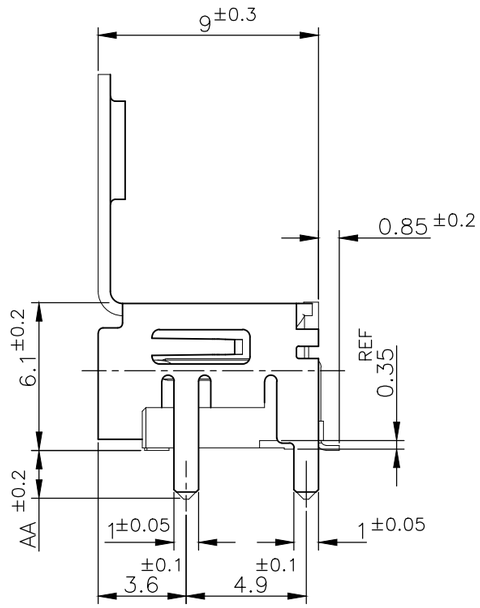


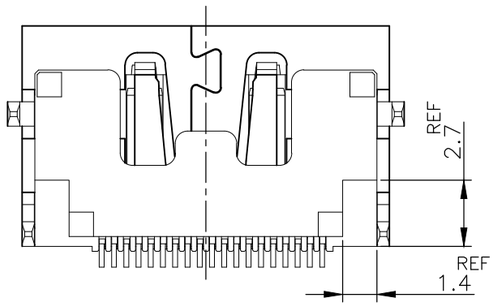


CONNECTOR: WITH FLANGE THROUGH HOLE TYPE

| MATERIAL | DESCRIPTION | ITEM |
|---|---|---|
| POLYIMIDE | TAPE | 4 |
| BRASS | CONTACT | 3 |
| PHOSPHOR BRONZE | SHELL | 2 |
| GLASS FILLED LCP UL94V–0, BLACK COLOR | HOUSING | 1 |

THIS DRAWING IS A CONTROLLED DOCUMENT.

DIMENSIONS: 単位： 粍 mm

TOLERANCES UNLESS OTHERWISE SPECIFIED: 一般公差

| | |
|---|---|
| 0 PLC | ± |
| 1 PLC | ± |
| 2 PLC | ± |
| 3 PLC | ± |
| 4 PLC | ± |
| ANGLES | ± |

MATERIAL 材料

FINISH 仕上

DWN
CHK
APVD
PRODUCT SPEC 製品規格
APPLICATION SPEC 取付適用規格
WEIGHT

TE Connectivity

NAME 名称: HDMI 19 POS RECEPTACLE ASSY SMT SHORT TYPE

| SIZE | CAGE CODE | DRAWING NO 番号 | RESTRICTED TO |
|---|---|---|---|
| A3 | 00779 | C–1903015 | — |

CUSTOMER DRAWING

| SCALE 尺度 | SHEET | REV |
|---|---|---|
| 4:1 | 3 OF 12 | S |

1470–19 (3/11)

THIS DRAWING IS UNPUBLISHED. RELEASED FOR PUBLICATION SEP ,2005.
© COPYRIGHT 2005 By – ALL RIGHTS RESERVED.

| LOC | DIST |
|---|---|
| — | — |

REVISIONS
変更

| P | LTR | DESCRIPTION | DATE | DWN | APVD |
|---|---|---|---|---|---|
| | – | SEE SHEET 1 | – | – | – |

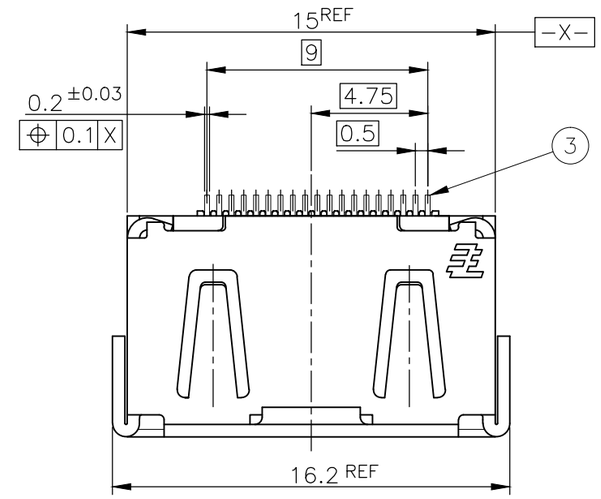


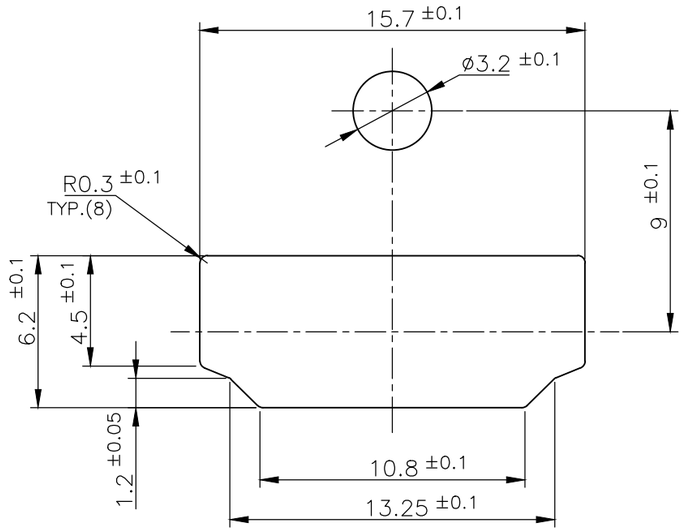


PANEL CUT OUT DIMENSION (REFERENCE)

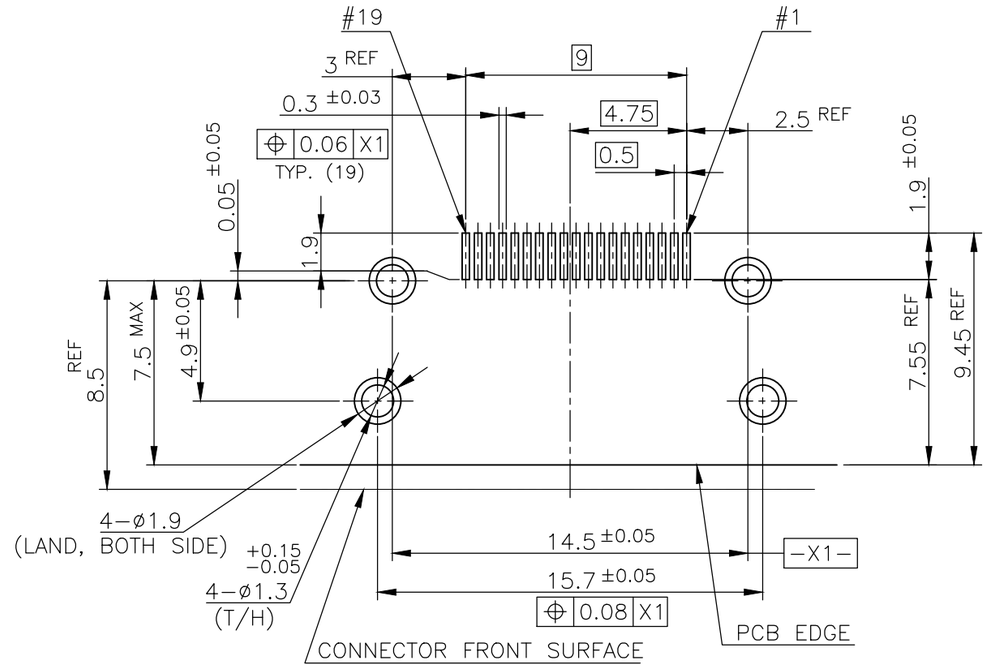


P.C.B LAYOUT (REFERENCE)
SHOWN AS CONNECTOR MOUNTING SIDE
TOLERANCE: NON–CUMULATIVE

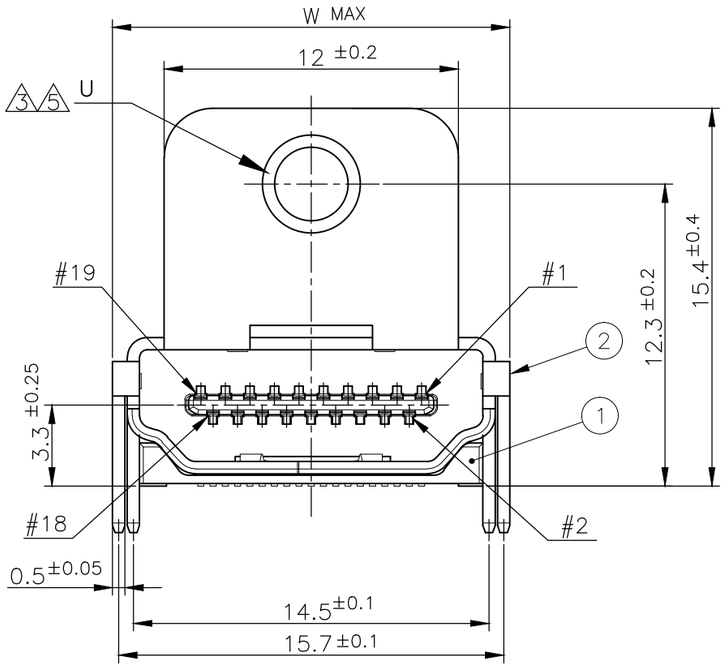


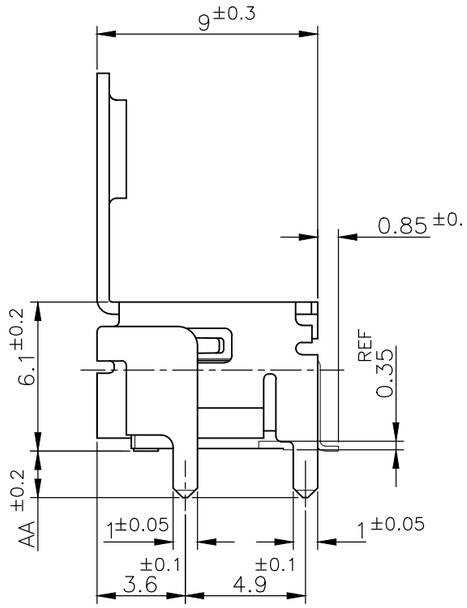


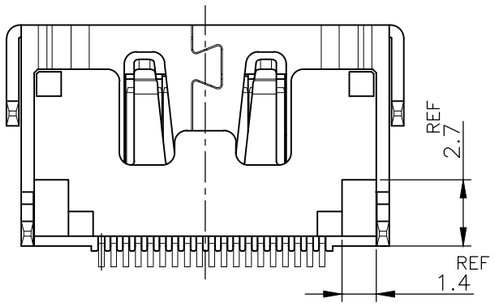


CONNECTOR: WITH FLANGE THROUGH HOLE TYPE

| MATERIAL | DESCRIPTION | ITEM |
|---|---|---|
| POLYIMIDE | TAPE | 4 |
| BRASS | CONTACT | 3 |
| PHOSPHOR BRONZE | SHELL | 2 |
| GLASS FILLED LCP UL94V–0, BLACK COLOR | HOUSING | 1 |

THIS DRAWING IS A CONTROLLED DOCUMENT.

DIMENSIONS: 単位： 耗 mm

TOLERANCES UNLESS OTHERWISE SPECIFIED: 一般公差
0 PLC ±
1 PLC ±
2 PLC ±
3 PLC ±
4 PLC ±
ANGLES ±

MATERIAL 材料
FINISH 仕上

DWN
CHK
APVD
PRODUCT SPEC 製品規格
APPLICATION SPEC 取付適用規格
WEIGHT

CUSTOMER DRAWING

TE Connectivity

NAME 名称: HDMI 19 POS RECEPTACLE ASSY SMT SHORT TYPE

| SIZE | CAGE CODE | DRAWING NO 番号 | RESTRICTED TO |
|---|---|---|---|
| A3 | 00779 | C–1903015 | – |

SCALE 尺度 4:1 | SHEET 4 OF 12 | REV S

THIS DRAWING IS UNPUBLISHED. RELEASED FOR PUBLICATION SEP ,2005.
© COPYRIGHT 2005 By – ALL RIGHTS RESERVED.

| LOC | DIST |
|---|---|
| — | — |

REVISIONS
変更

| P | LTR | DESCRIPTION | DATE | DWN | APVD |
|---|---|---|---|---|---|
| | – | SEE SHEET 1 | – | — | — |

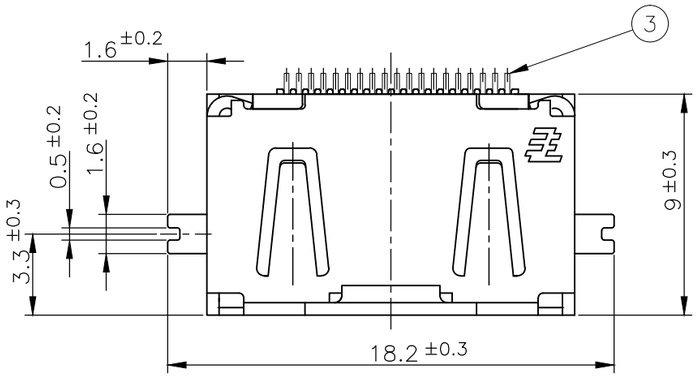


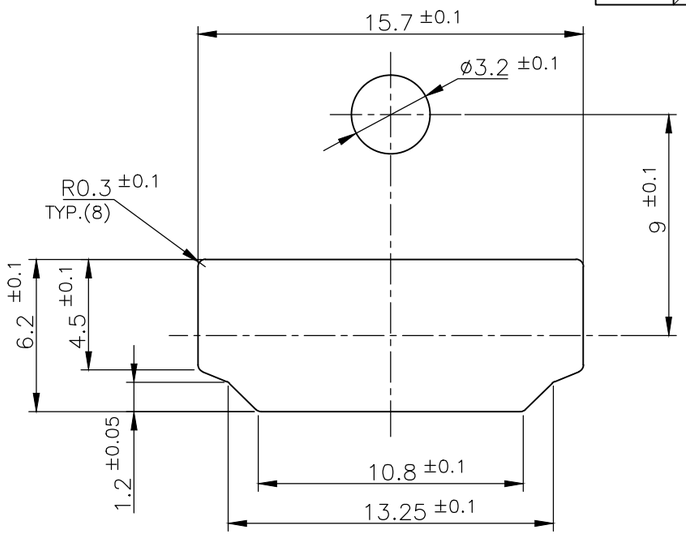


PANEL CUT OUT DIMENSION (REFERENCE)

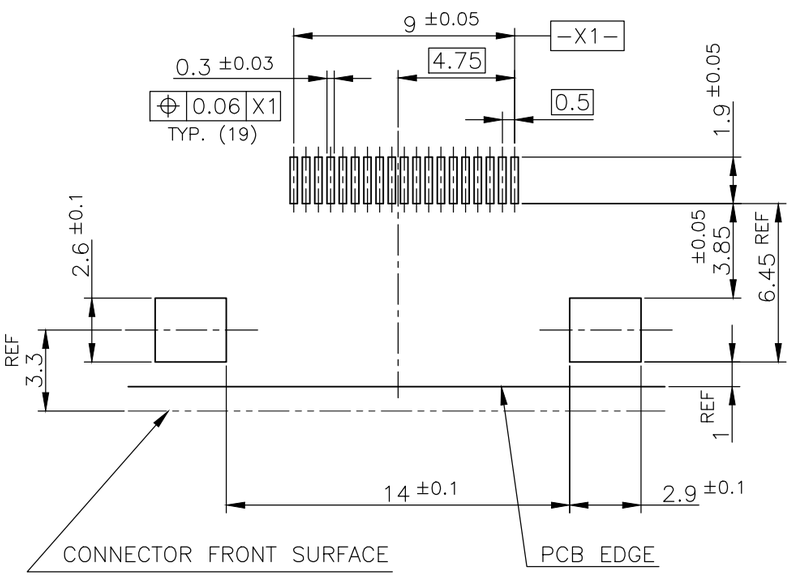


P.C.B LAYOUT (REFERENCE)
SHOWN AS CONNECTOR MOUNTING SIDE
TOLERANCE: NON–CUMULATIVE

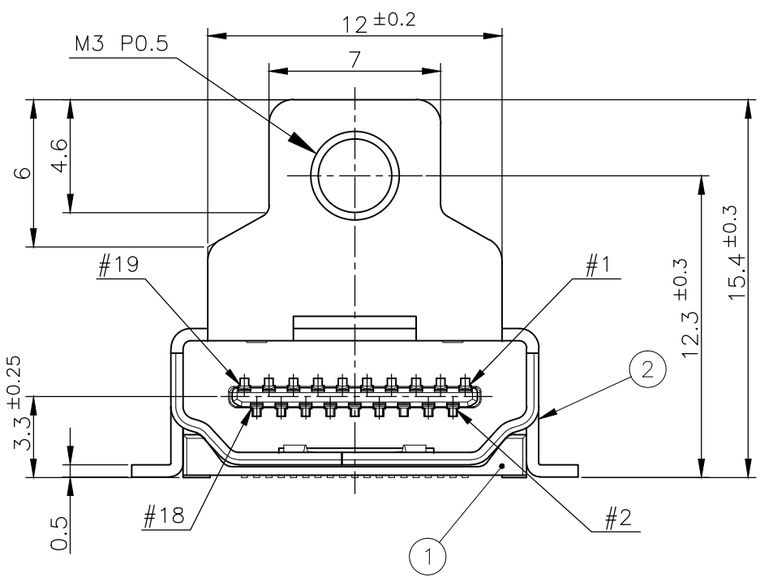


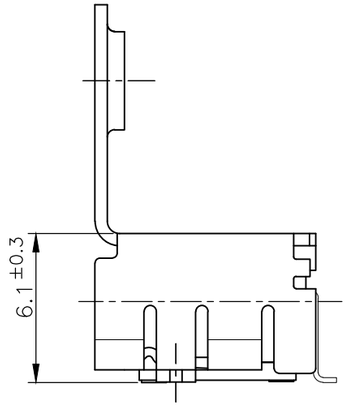


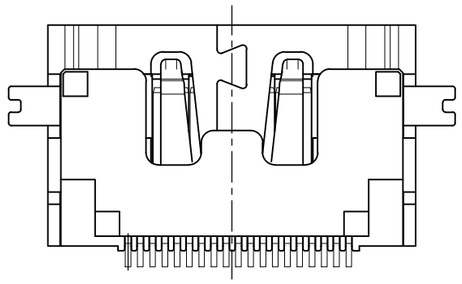

CONNECTOR: WITH FLANGE FULL SMT TYPE

| MATERIAL | DESCRIPTION | ITEM |
|---|---|---|
| BRASS | CONTACT | 3 |
| PHOSPHOR BRONZE | SHELL | 2 |
| GLASS FILLED LCP UL94V–0, BLACK COLOR | HOUSING | 1 |

THIS DRAWING IS A CONTROLLED DOCUMENT.

DIMENSIONS: 単位： 耗 mm

TOLERANCES UNLESS OTHERWISE SPECIFIED: 一般公差
0 PLC ±
1 PLC ±
2 PLC ±
3 PLC ±
4 PLC ±
ANGLES ±

MATERIAL 材料
FINISH 仕上

DWN
CHK
APVD
PRODUCT SPEC 製品規格
APPLICATION SPEC 取付適用規格
WEIGHT

TE Connectivity

NAME 名称: HDMI 19 POS RECEPTACLE ASSY SMT SHORT TYPE

| SIZE | CAGE CODE | DRAWING NO 番号 | RESTRICTED TO |
|---|---|---|---|
| A3 | 00779 | C–1903015 | — |

CUSTOMER DRAWING | SCALE 尺度 4:1 | SHEET 5 OF 12 | REV S

THIS DRAWING IS UNPUBLISHED. RELEASED FOR PUBLICATION SEP ,2005.
© COPYRIGHT 2005 By – ALL RIGHTS RESERVED.

| LOC | DIST |
|---|---|
| — | — |

REVISIONS 変更

| P | LTR | DESCRIPTION | DATE | DWN | APVD |
|---|---|---|---|---|---|
| | – | SEE SHEET 1 | – | – | – |

1903015–1, 2–1903015–2, 5–1903015–1
5–1903015–5, 7–1903015–1; AS SHOWN

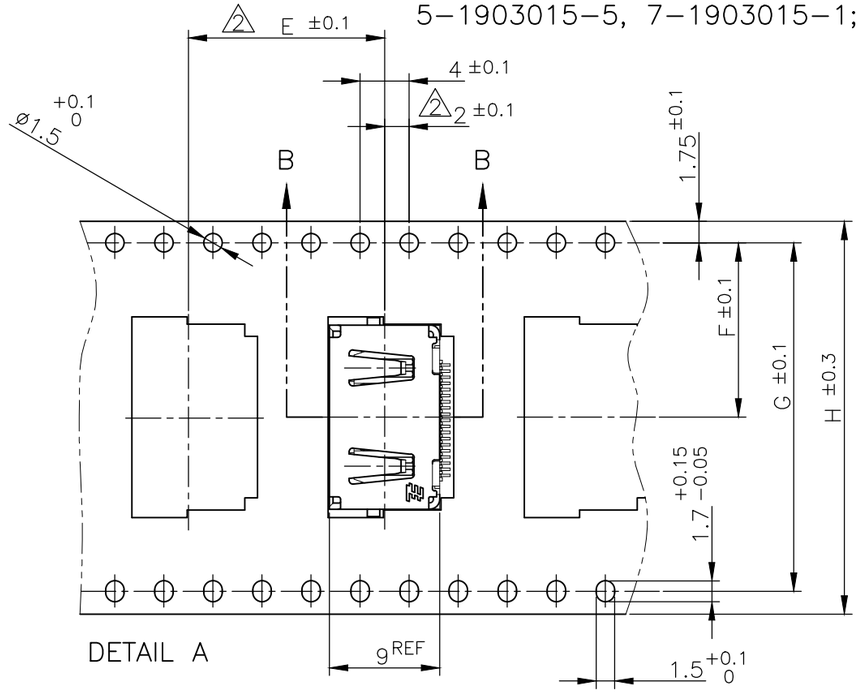


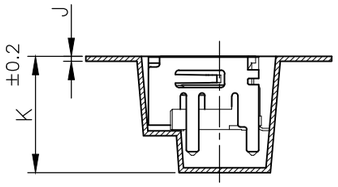


B–B

5–1903015–3; AS SHOWN
(SCALE 1:1)

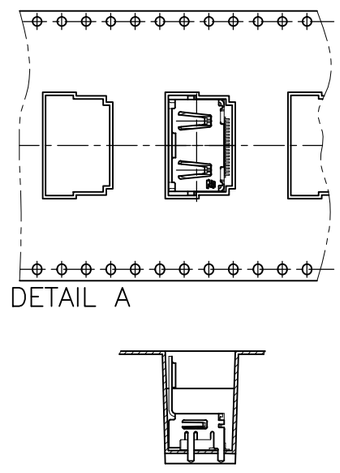


5–1903015–9; AS SHOWN
(SCALE 1:1)

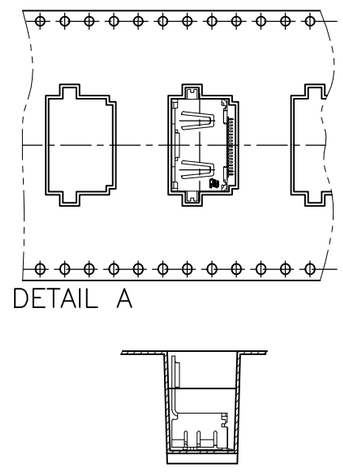


9–1903015–3; AS SHOWN
(SCALE 1:1)

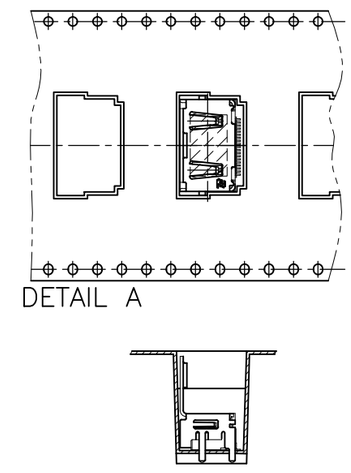


1903015–3; AS SHOWN
(SCALE 1:1)

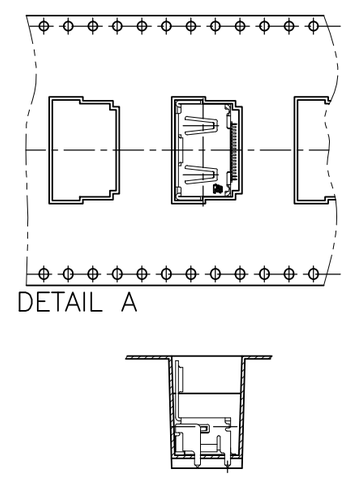


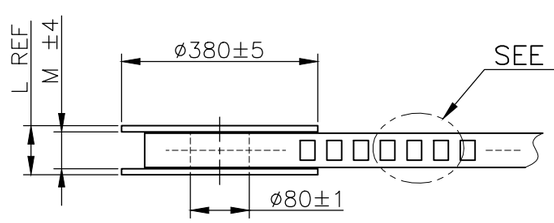


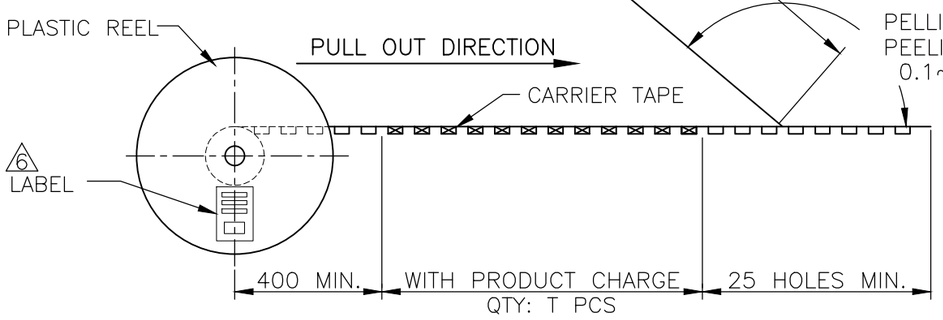


WEEDING THE COVER TAPE: 300 MIN
(NOT INCLUDE EMPTINESS POCKET)

PELLING ANGLE: 165°~180°
PEELING STRENGTH:
0.1~0.7N (300mm/min.)

6 LABEL DESCRIPTION

TYCO P/N: *–1903015–*
QTY: * pcs
D/C:
MADE IN CHINA

| | |
|---|---|
| PET | COVER TAPE |
| PS | CARRIER TAPE |
| PLASTIC | REEL |
| MATERIAL | DESCRIPTION |

THIS DRAWING IS A CONTROLLED DOCUMENT.

DIMENSIONS: 単位：耗 mm

TOLERANCES UNLESS OTHERWISE SPECIFIED: 一般公差
0 PLC ±
1 PLC ±
2 PLC ±
3 PLC ±
4 PLC ±
ANGLES ±

MATERIAL 材料
FINISH 仕上

DWN
CHK
APVD
PRODUCT SPEC 製品規格
APPLICATION SPEC 取付適用規格
WEIGHT

TE Connectivity

NAME 名称: HDMI 19 POS RECEPTACLE ASSY SMT SHORT TYPE

| SIZE | CAGE CODE | DRAWING NO 番号 | RESTRICTED TO |
|---|---|---|---|
| A3 | 00779 | C–1903015 | — |

CUSTOMER DRAWING | SCALE 尺度 4:1 | SHEET 6 OF 12 | REV S

THIS DRAWING IS UNPUBLISHED. RELEASED FOR PUBLICATION SEP ,2005.
© COPYRIGHT 2005 By – ALL RIGHTS RESERVED.

| LOC | DIST |
|---|---|
| — | — |

REVISIONS 変更

| P | LTR | DESCRIPTION | DATE | DWN | APVD |
|---|---|---|---|---|---|
| | – | SEE SHEET 1 | – | – | – |

1903015-2, 1903015-5, 4-1903015-1, ~~5-1903015-2,~~ 5-1903015-4
8-1903015-4, 9-1903015-4; AS SHOWN

OBSOLETE

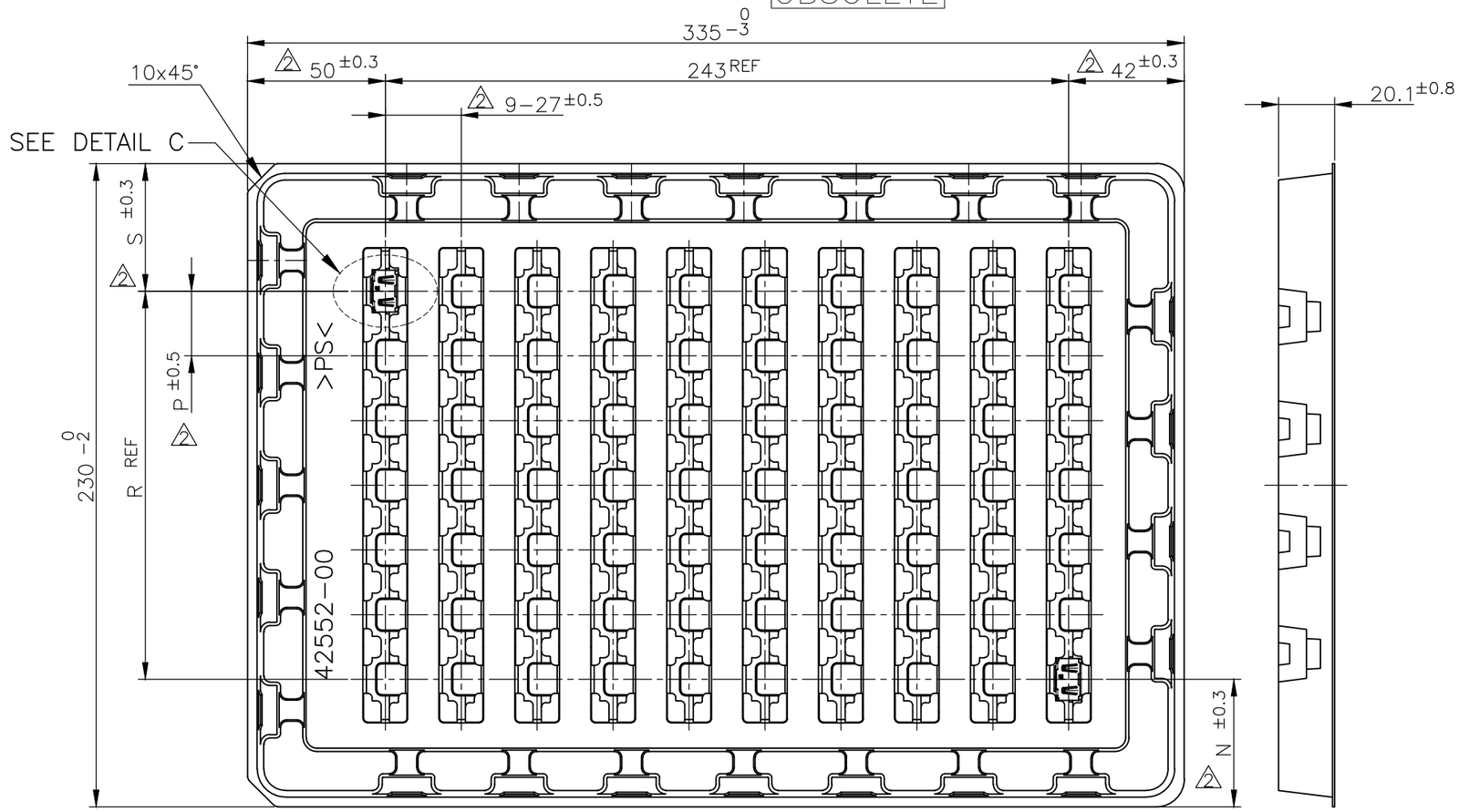


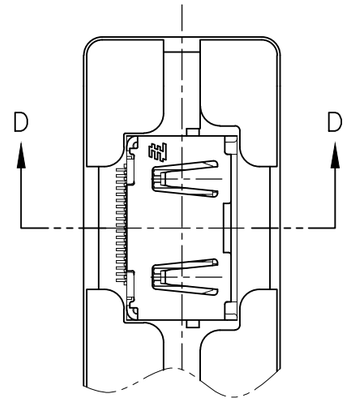


DETAIL C
(SCALE 2:1)

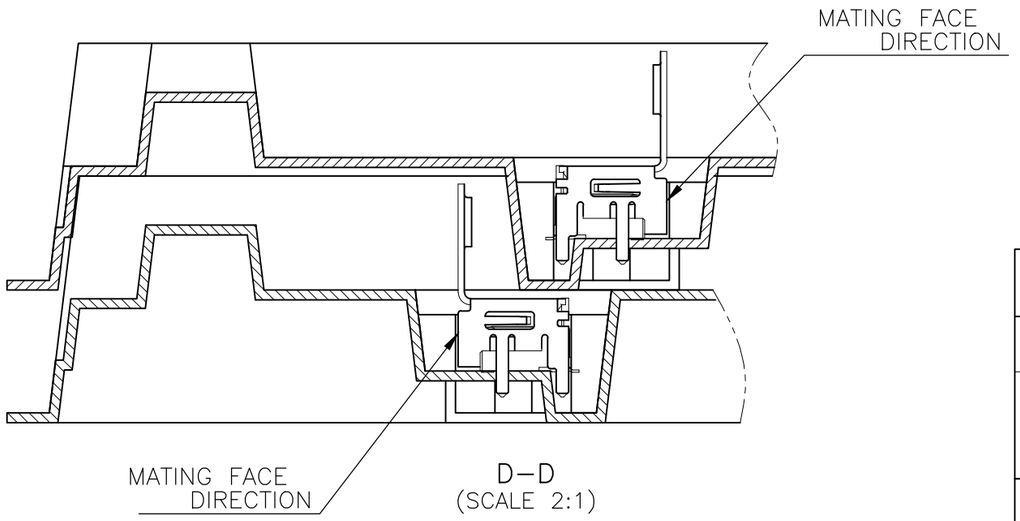


D–D
(SCALE 2:1)

| PS | TRAY |
|---|---|
| MATERIAL | DESCRIPTION |

THIS DRAWING IS A CONTROLLED DOCUMENT.

DIMENSIONS: 単位： 耗 mm

TOLERANCES UNLESS OTHERWISE SPECIFIED: 一般公差
0 PLC ±
1 PLC ±
2 PLC ±
3 PLC ±
4 PLC ±
ANGLES ±

MATERIAL 材料

FINISH 仕上

DWN
CHK
APVD
PRODUCT SPEC 製品規格
APPLICATION SPEC 取付適用規格
WEIGHT

TE Connectivity

NAME 名称: HDMI 19 POS RECEPTACLE ASSY SMT SHORT TYPE

| SIZE | CAGE CODE | DRAWING NO 番号 | RESTRICTED TO |
|---|---|---|---|
| A3 | 00779 | C-1903015 | — |

CUSTOMER DRAWING

| SCALE 尺度 | SHEET | REV |
|---|---|---|
| 4:1 | 7 OF 12 | S |

THIS DRAWING IS UNPUBLISHED. RELEASED FOR PUBLICATION SEP ,2005.
© COPYRIGHT 2005 By – ALL RIGHTS RESERVED.

| LOC | DIST |
|---|---|
| — | — |

REVISIONS 変更

| P | LTR | DESCRIPTION | DATE | DWN | APVD |
|---|---|---|---|---|---|
| | – | SEE SHEET 1 | – | — | — |

1903015–4; AS SHOWN

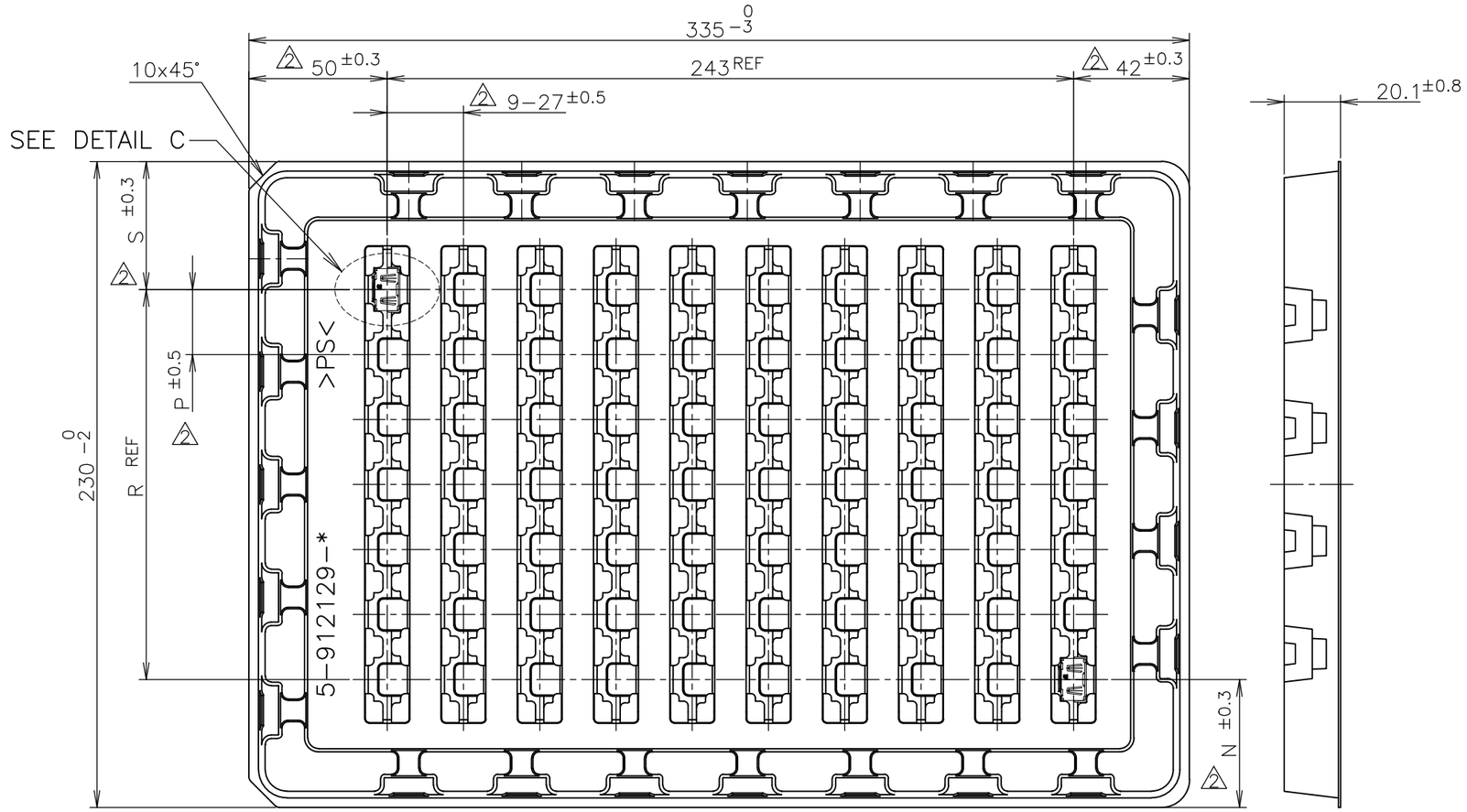


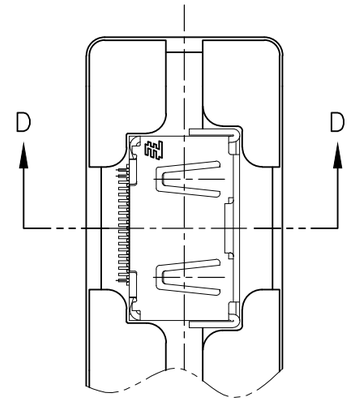


DETAIL C
(SCALE 2:1)

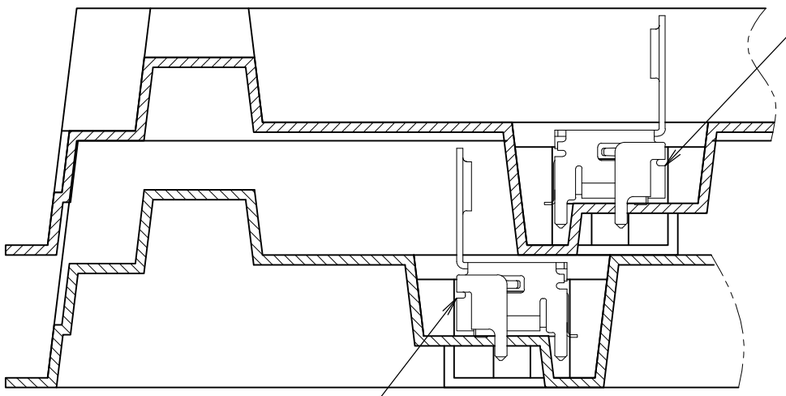


D–D
(SCALE 2:1)

| PS | TRAY |
|---|---|
| MATERIAL | DESCRIPTION |

THIS DRAWING IS A CONTROLLED DOCUMENT.

DIMENSIONS: 単位： 耗 mm

TOLERANCES UNLESS OTHERWISE SPECIFIED: 一般公差

| | |
|---|---|
| 0 PLC | ± |
| 1 PLC | ± |
| 2 PLC | ± |
| 3 PLC | ± |
| 4 PLC | ± |
| ANGLES | ± |

MATERIAL 材料

FINISH 仕上

DWN

CHK

APVD

PRODUCT SPEC 製品規格

APPLICATION SPEC 取付適用規格

WEIGHT

TE Connectivity

NAME 名称: HDMI 19 POS RECEPTACLE ASSY SMT SHORT TYPE

| SIZE | CAGE CODE | DRAWING NO 番号 | RESTRICTED TO |
|---|---|---|---|
| A3 | 00779 | C–1903015 | — |

CUSTOMER DRAWING

| SCALE 尺度 | SHEET | REV |
|---|---|---|
| 4:1 | 8 OF 12 | S |

THIS DRAWING IS UNPUBLISHED. RELEASED FOR PUBLICATION SEP ,2005.
© COPYRIGHT 2005 By – ALL RIGHTS RESERVED.

| LOC | DIST |
|---|---|
| — | — |

REVISIONS 変更

| P | LTR | DESCRIPTION | DATE | DWN | APVD |
|---|---|---|---|---|---|
| | – | SEE SHEET 1 | – | – | – |

1903015–7, 1903015–8; AS SHOWN

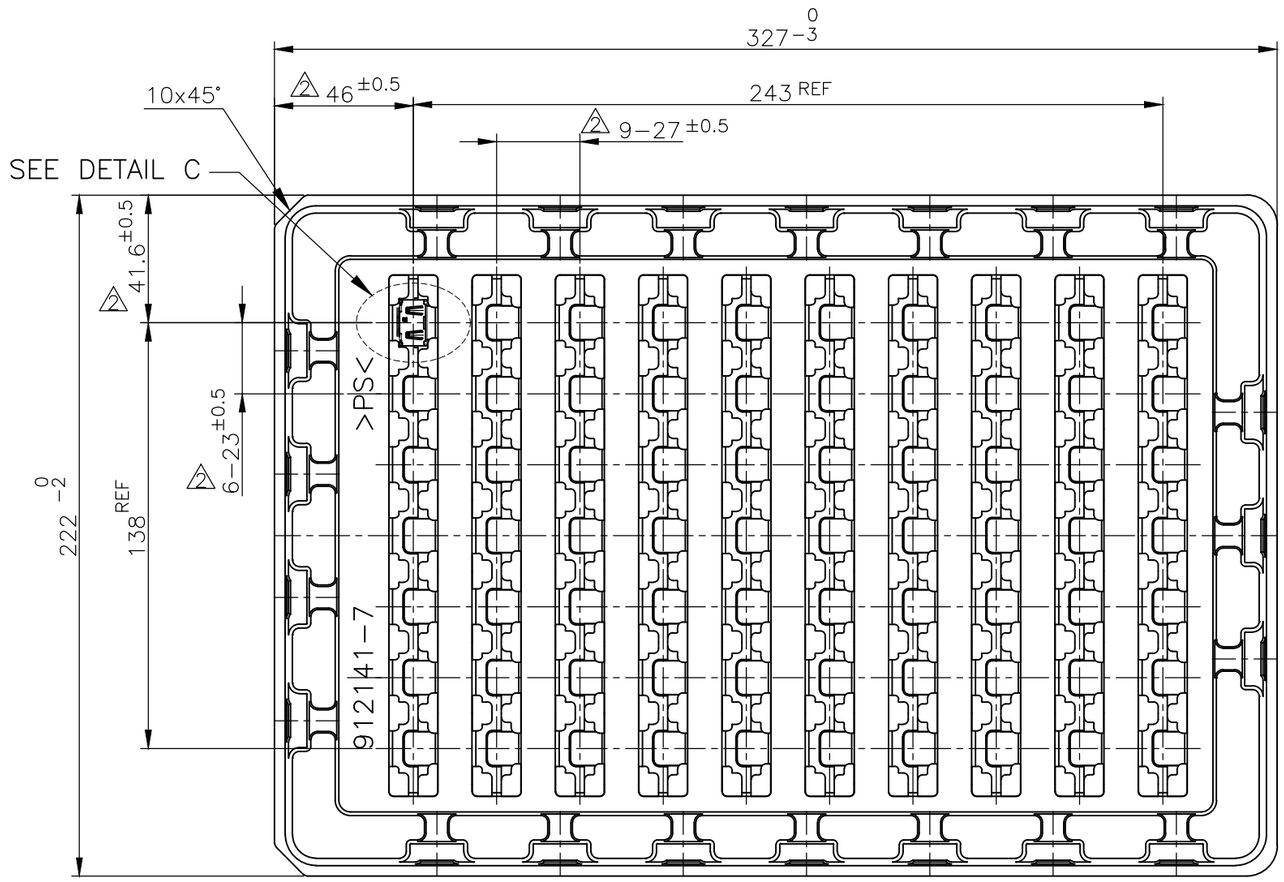


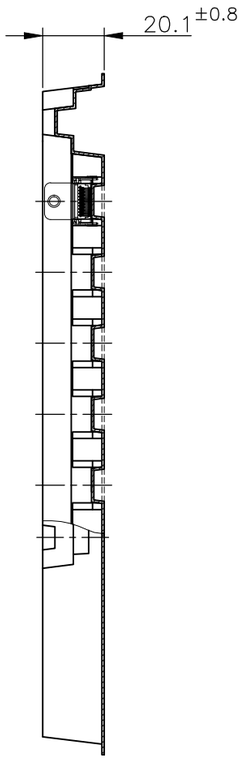


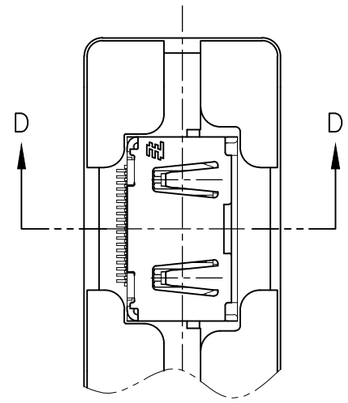


DETAIL C
(SCALE 2:1)

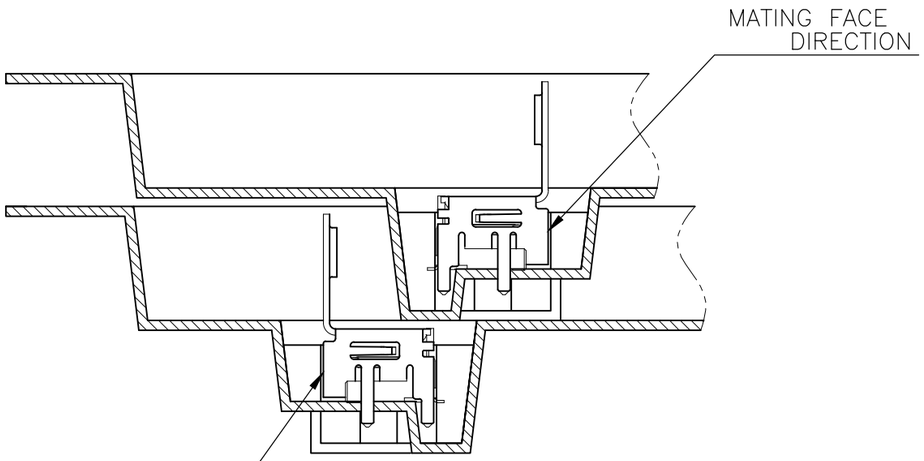


D–D
(SCALE 2:1)

| PS | TRAY |
|---|---|
| MATERIAL | DESCRIPTION |

THIS DRAWING IS A CONTROLLED DOCUMENT.

DIMENSIONS: 単位： 粍 mm

TOLERANCES UNLESS OTHERWISE SPECIFIED: 一般公差

| | |
|---|---|
| 0 PLC | ± |
| 1 PLC | ± |
| 2 PLC | ± |
| 3 PLC | ± |
| 4 PLC | ± |
| ANGLES | ± |

MATERIAL 材料

FINISH 仕上

DWN

CHK

APVD

PRODUCT SPEC 製品規格

APPLICATION SPEC 取付適用規格

WEIGHT

CUSTOMER DRAWING

TE Connectivity

NAME 名称: HDMI 19 POS RECEPTACLE ASSY SMT SHORT TYPE

| SIZE | CAGE CODE | DRAWING NO 番号 | RESTRICTED TO |
|---|---|---|---|
| A3 | 00779 | C–1903015 | — |

| CUSTOMER DRAWING | SCALE 尺度 4:1 | SHEET 9 OF 12 | REV S |
|---|---|---|---|

THIS DRAWING IS UNPUBLISHED. RELEASED FOR PUBLICATION SEP ,2005.
© COPYRIGHT 2005 By – ALL RIGHTS RESERVED.

| LOC | DIST |
|---|---|
| — | — |

REVISIONS 変更

| P | LTR | DESCRIPTION | DATE | DWN | APVD |
|---|---|---|---|---|---|
| | – | SEE SHEET 1 | – | – | – |

8–1903015–4; AS SHOWN

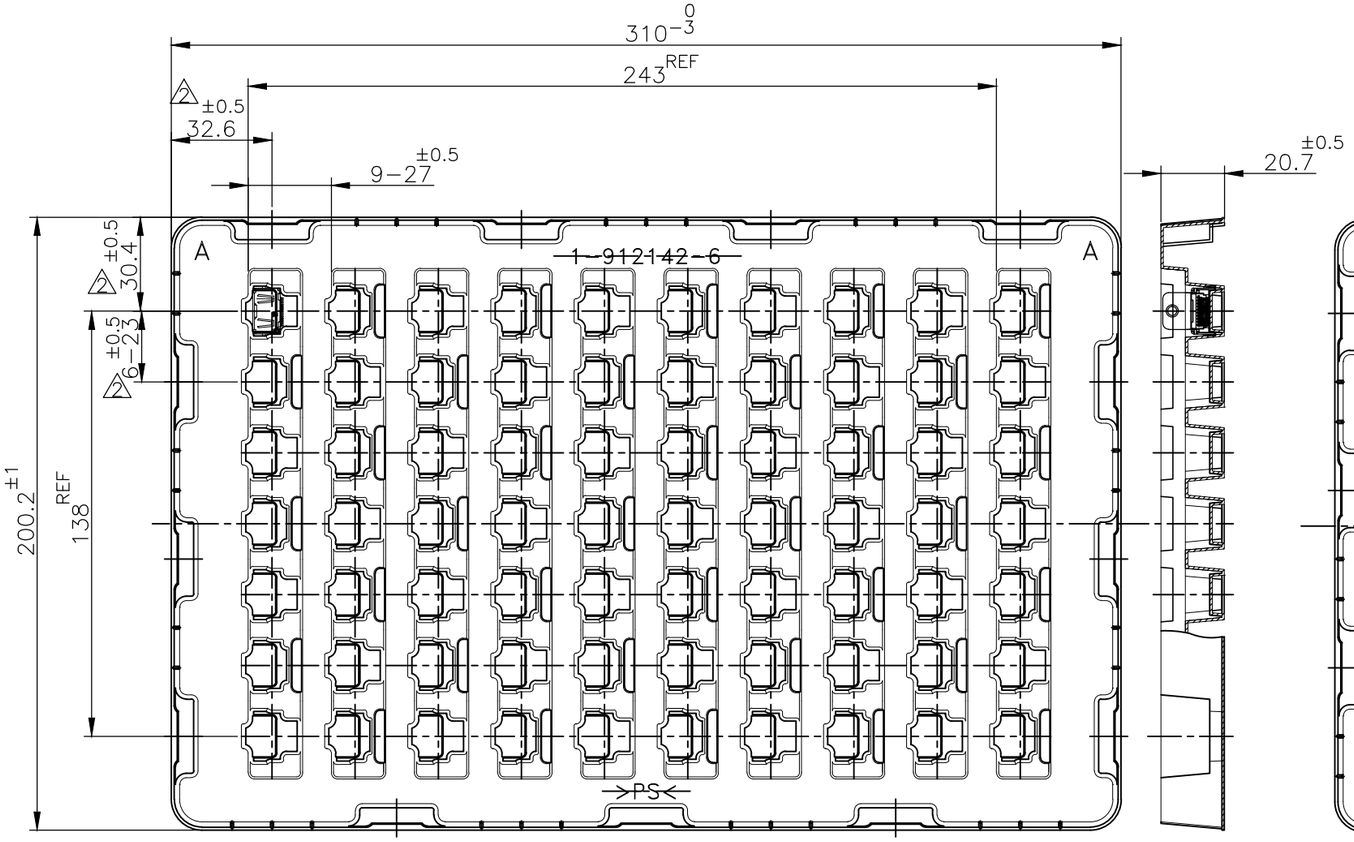


TRAY A

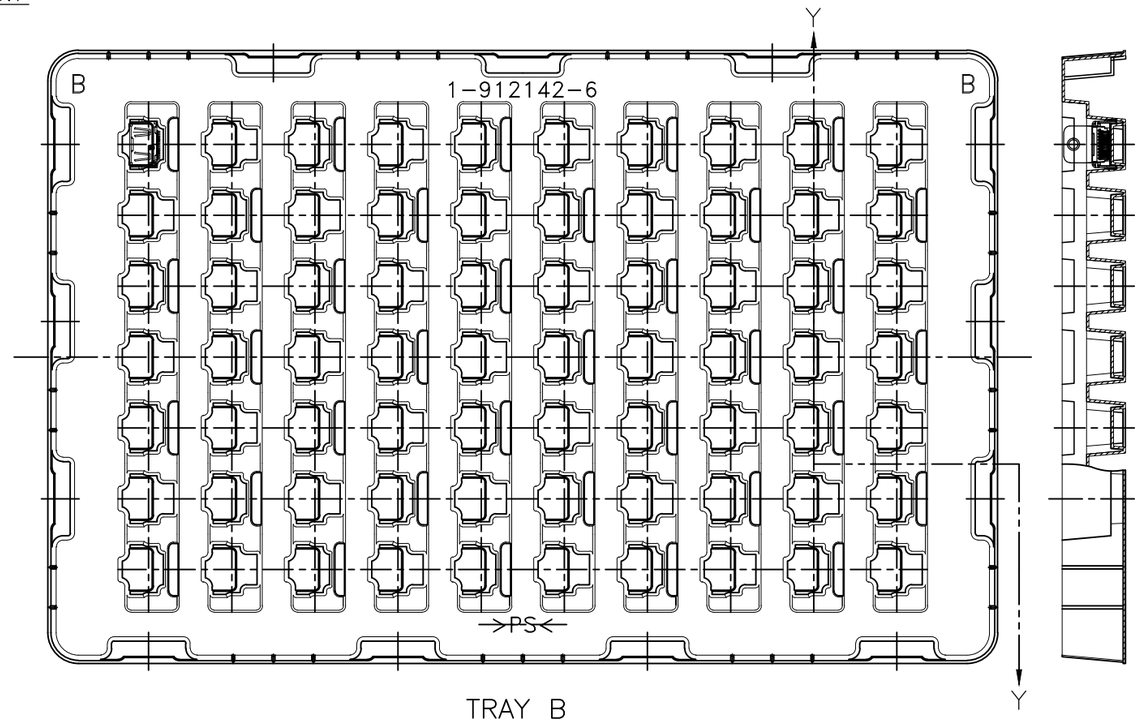


TRAY B

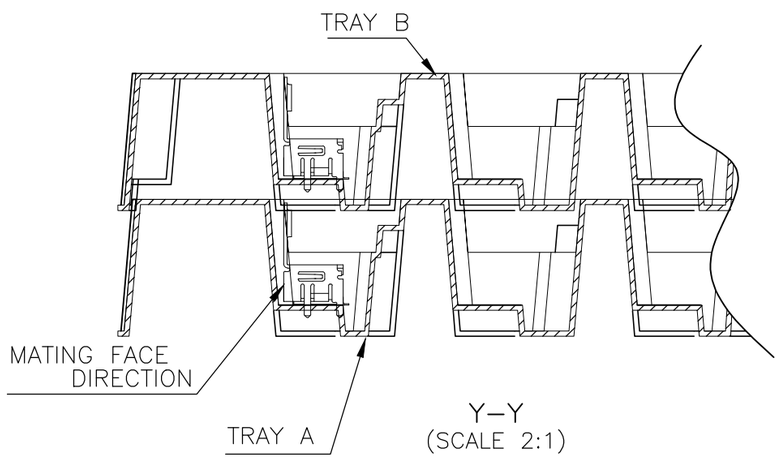


Y–Y
(SCALE 2:1)

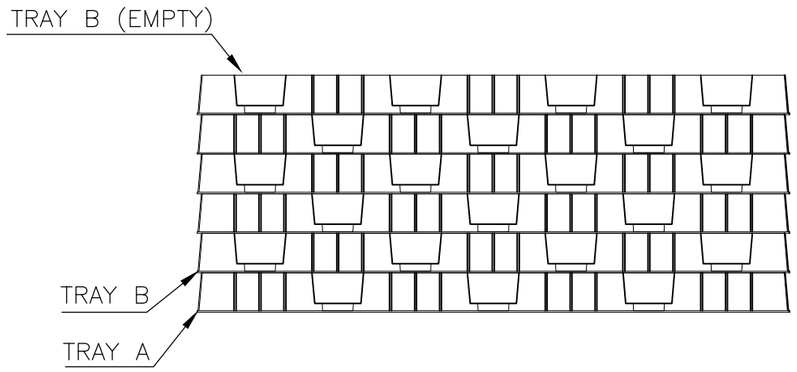


| PS | TRAY |
|---|---|
| MATERIAL | DESCRIPTION |

THIS DRAWING IS A CONTROLLED DOCUMENT.

DIMENSIONS: 単位： 耗 mm

TOLERANCES UNLESS OTHERWISE SPECIFIED: 一般公差

| | |
|---|---|
| 0 PLC | ± |
| 1 PLC | ± |
| 2 PLC | ± |
| 3 PLC | ± |
| 4 PLC | ± |
| ANGLES | ± |

MATERIAL 材料

FINISH 仕上

DWN

CHK

APVD

PRODUCT SPEC 製品規格

APPLICATION SPEC 取付適用規格

WEIGHT

CUSTOMER DRAWING

TE Connectivity

NAME 名称: HDMI 19 POS RECEPTACLE ASSY SMT SHORT TYPE

| SIZE | CAGE CODE | DRAWING NO 番号 | RESTRICTED TO |
|---|---|---|---|
| A3 | 00779 | C–1903015 | — |

| CUSTOMER DRAWING | SCALE 尺度 4:1 | SHEET 10 OF 12 | REV S |
|---|---|---|---|

THIS DRAWING IS UNPUBLISHED. RELEASED FOR PUBLICATION SEP ,2005.
© COPYRIGHT 2005 By – ALL RIGHTS RESERVED.

| LOC | DIST |
|---|---|
| — | — |

REVISIONS
変更

| P | LTR | DESCRIPTION | DATE | DWN | APVD |
|---|---|---|---|---|---|
| | – | SEE SHEET 1 | – | — | — |

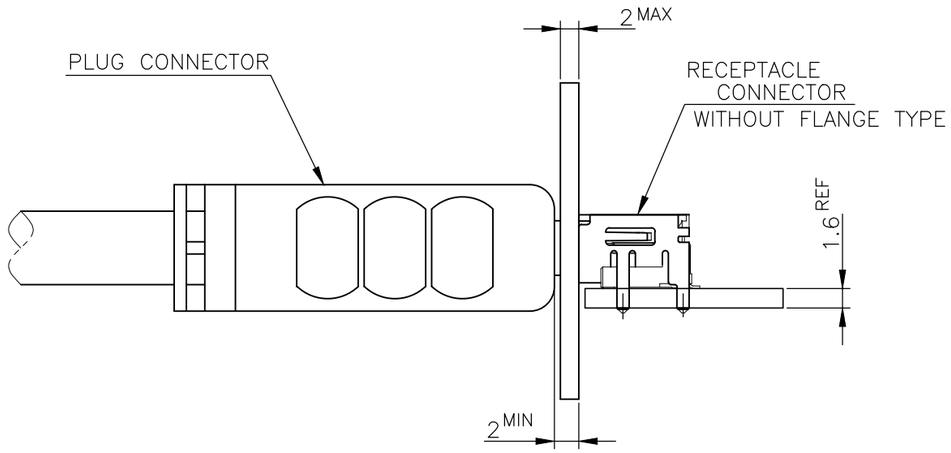


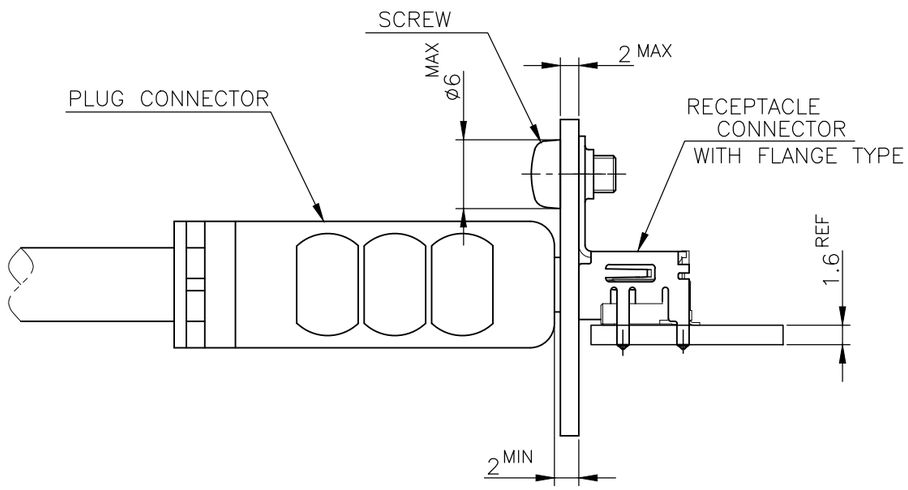


MATING CONDITION (REFERENCE)
(SCALE 2:1)

THIS DRAWING IS A CONTROLLED DOCUMENT.

DIMENSIONS:
単位： 耗
mm

TOLERANCES UNLESS OTHERWISE SPECIFIED:
一般公差

| | |
|---|---|
| 0 PLC | ± |
| 1 PLC | ± |
| 2 PLC | ± |
| 3 PLC | ± |
| 4 PLC | ± |
| ANGLES | ± |

MATERIAL
材料

FINISH
仕上

DWN
CHK
APVD
PRODUCT SPEC
製品規格
APPLICATION SPEC
取付適用規格
WEIGHT

TE Connectivity

NAME
名称
HDMI 19 POS RECEPTACLE ASSY
SMT SHORT TYPE

| SIZE | CAGE CODE | DRAWING NO 番号 | RESTRICTED TO |
|---|---|---|---|
| A3 | 00779 | C-1903015 | — |

CUSTOMER DRAWING

| SCALE 尺度 | SHEET | REV |
|---|---|---|
| 4:1 | 11 OF 12 | S |

THIS DRAWING IS UNPUBLISHED. RELEASED FOR PUBLICATION SEP ,2005.
© COPYRIGHT 2005 By – ALL RIGHTS RESERVED.

| LOC | DIST |
|---|---|
| — | — |

REVISIONS

| P | LTR | DESCRIPTION | DATE | DWN | APVD |
|---|---|---|---|---|---|
| | – | SEE SHEET 1 | – | — | — |

P/N:6-1903015-3

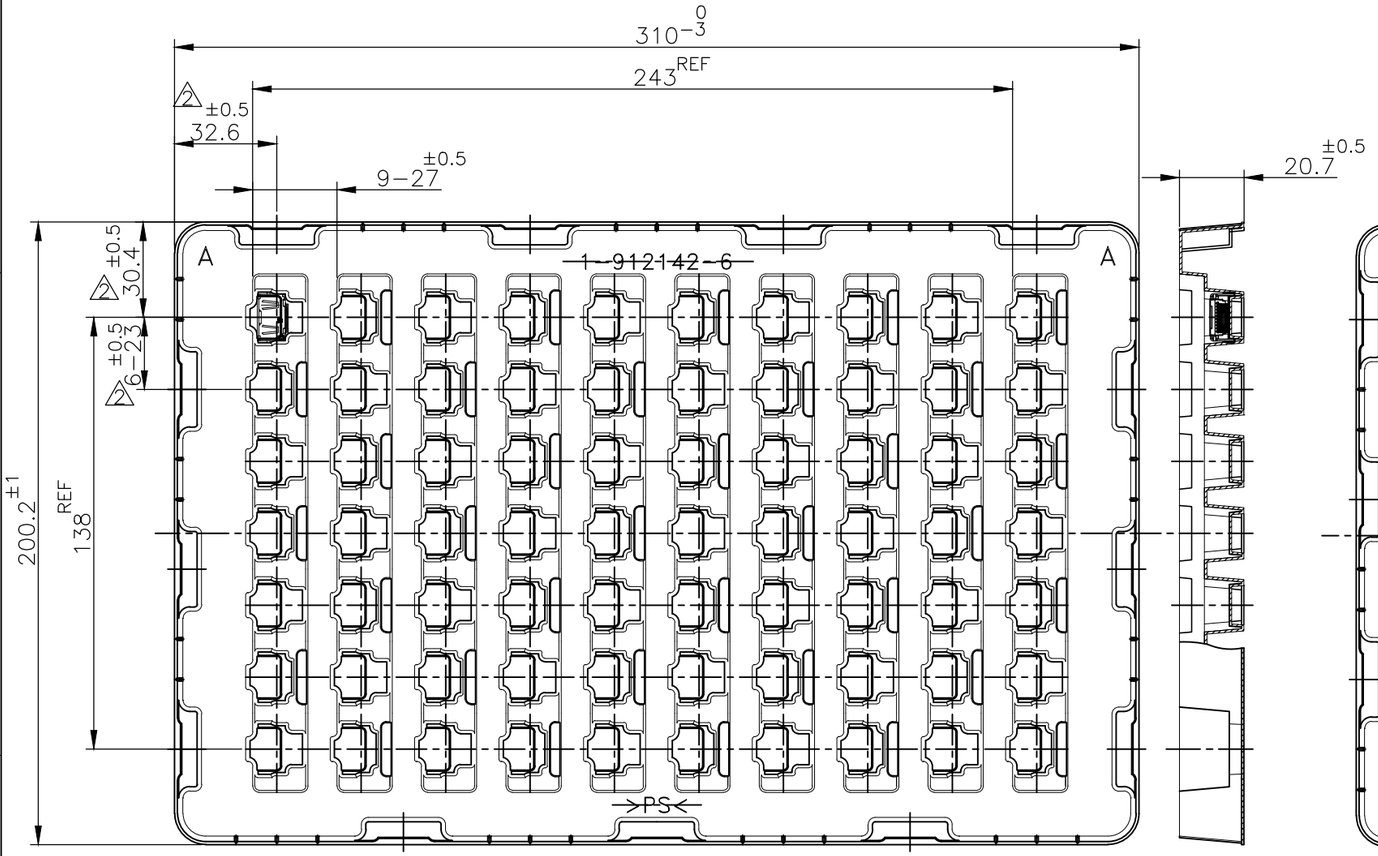


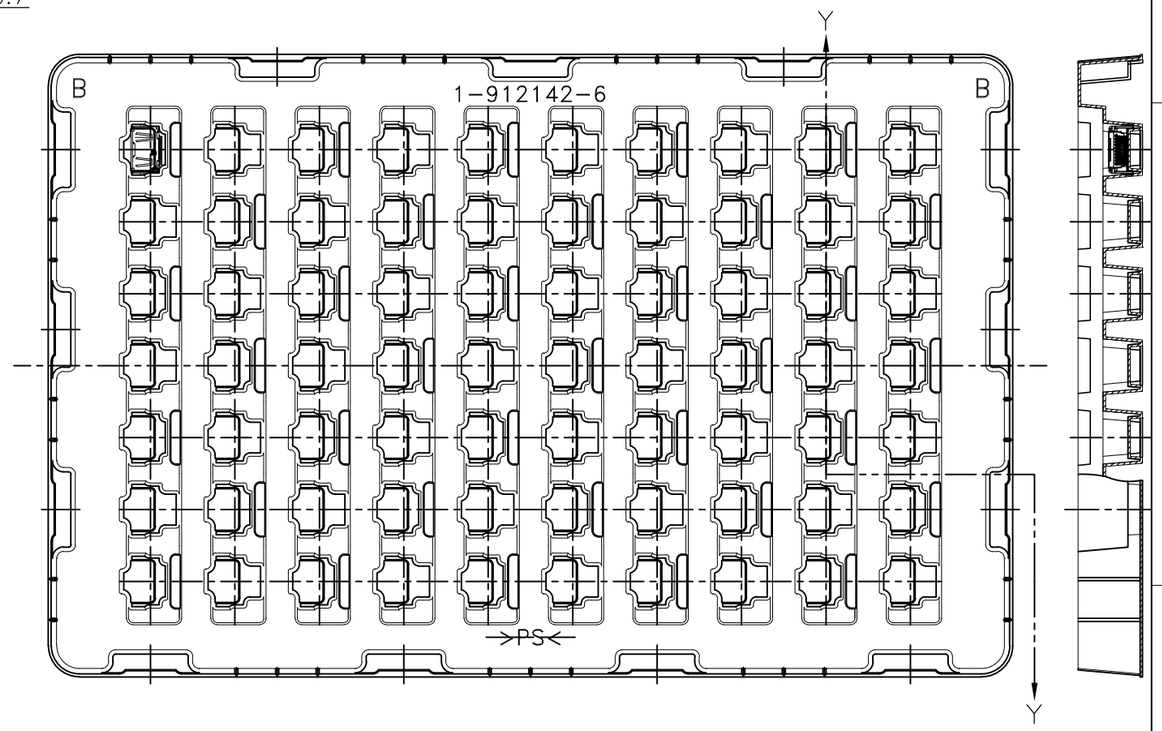


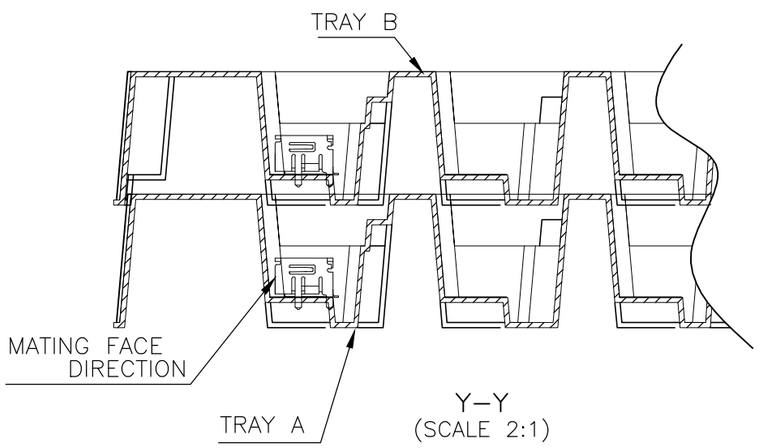


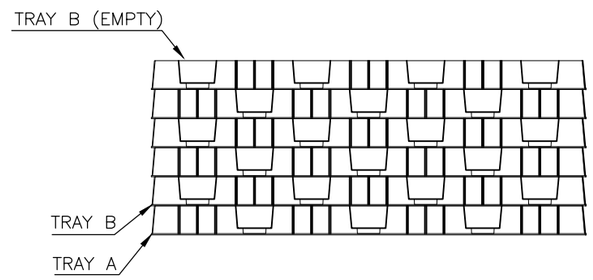


| PS | TRAY |
|---|---|
| MATERIAL | DESCRIPTION |

THIS DRAWING IS A CONTROLLED DOCUMENT.

DIMENSIONS: 単位： 粍 mm

TOLERANCES UNLESS OTHERWISE SPECIFIED: 一般公差

| | |
|---|---|
| 0 PLC | ± |
| 1 PLC | ± |
| 2 PLC | ± |
| 3 PLC | ± |
| 4 PLC | ± |
| ANGLES | ± |

MATERIAL 材料

FINISH 仕上

DWN

CHK

APVD

PRODUCT SPEC 製品規格

APPLICATION SPEC 取付適用規格

WEIGHT

TE Connectivity

NAME 名称: HDMI 19 POS RECEPTACLE ASSY SMT SHORT TYPE

| SIZE | CAGE CODE | DRAWING NO 番号 | RESTRICTED TO |
|---|---|---|---|
| A3 | 00779 | C-1903015 | — |

CUSTOMER DRAWING

| SCALE 尺度 | SHEET | REV |
|---|---|---|
| 4:1 | 12 OF 12 | S |