used for: D-SUB

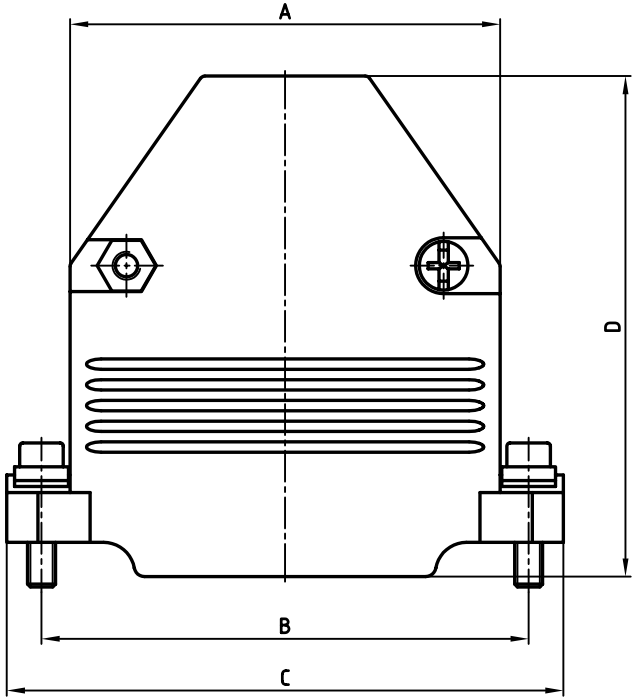

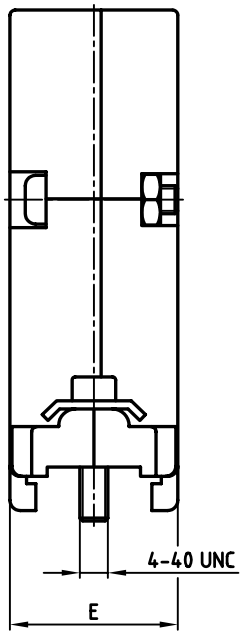

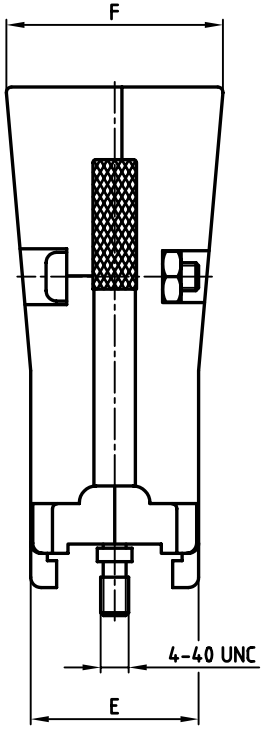

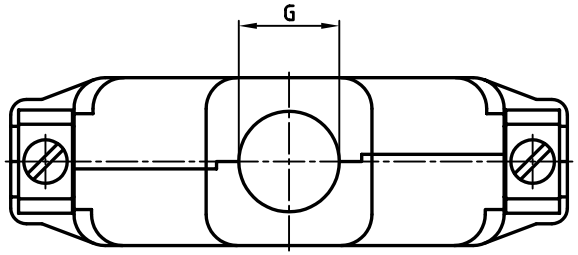

PRODUCT NO.		
POS.	SHORT SCREW	LONG SCREW
9	300X11129X	300X11179X
15	300X11139X	300X11189X
25	300X11149X	300X11199X
37	300X11159X	300X11209X
50	300X11169X	300X11219X

Directive 2002/95/EC „RoHS" Compliant

POS.	A	B	C	D	E	F	G
9	19.8	25.0	31.0	47.0	15.6	---	8.5
15	27.9	33.3	40.2	48.3	16.2	---	10
25	41.5	47.0	53.7	48.8	16.2	---	11
37	57.8	63.5	69.0	48.5	16.2	20.8	14
50	55.0	61.1	67.0	48.5	18.7	23.2	15

THIS DRAWING MAY NOT BE COPIED OR REPRODUCED IN ANY WAY, AND MAY NOT BE PASSED ON TO A THIRD PARTY WITHOUT WRITTEN PERMISSION. OWNERSHIP AND COPYRIGHT OF CONEC GmbH

DO NOT ALTER CAD DRAWING BY HAND

finish: ZINC PLATED

tolerance

rev.	description	date	name

1995	date	name
drawn	03.07.	Barcinski
appd.	03.07.	Mickenbecker
norm		
d-old		

CONEC®

scale: 2:1

material:

title: METALHOOD
9-50 pos.

dwg no: 16V1107A

CAD/ REL.14

DIN-A 3

sh: 1/1

product no: SEE TABLE