THIS DRAWING IS UNPUBLISHED. RELEASED FOR PUBLICATION 20
© COPYRIGHT 20 BY - ALL RIGHTS RESERVED.

REVISIONS

P	LTR	DESCRIPTION	DATE	DWN	APVD
	C2	REVISED PER ECO-11-005140	19APR11	RK	HMR
	D	REVISED PER ECO-17-004650	06APR2017	BDA	MZ

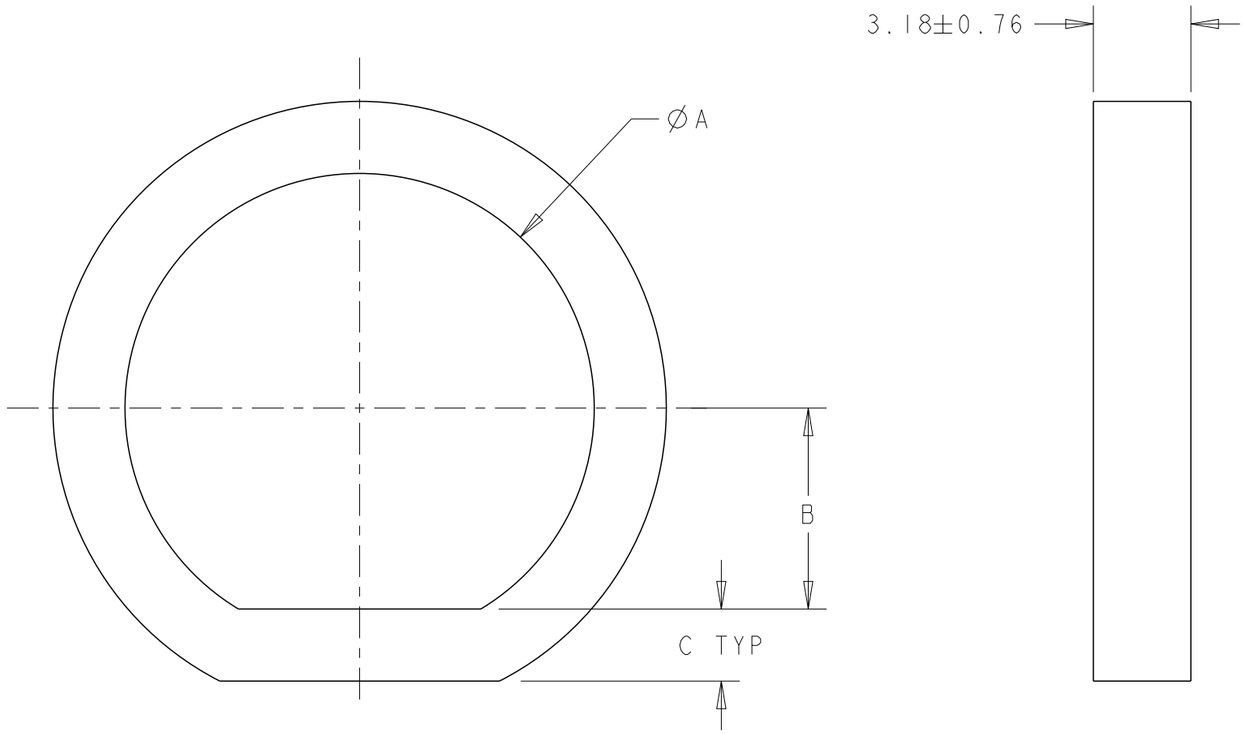

	C	B	A	PART NUMBER
OBSOLETE	1.50	6.55	15.3	1445420-8
OBSOLETE	2.35	10.5	23.1	1445420-7
2 OBSOLETE	2.35	5.25	12.5	1445420-6
OBSOLETE	2.35	6.0	14.0	1445420-5
2 OBSOLETE	2.35	4.2	9.25	1445420-4
OBSOLETE	2.35	4.5	10.9	1445420-3
	2.35	8.5	18.5	1445420-2
	2.35	6.55	15.3	1445420-1

1 MATERIAL: NEOPRENE CLOSED CELL SPONGE, COLOR-BLACK.

2 OBSOLETE PARTS: OBSOLETE CIS STREAMLINING PER D.RENAUD/D.SINISI

THIS DRAWING IS A CONTROLLED DOCUMENT.

DIMENSIONS: mm

TOLERANCES UNLESS OTHERWISE SPECIFIED:
0 PLC ±0
1 PLC ±0.51
2 PLC ±0.51
3 PLC ±-
4 PLC ±-
ANGLES ±-

MATERIAL 1

FINISH -

DWN G DOUTY 04JUN2003
CHK H.WALEEM 18JUL2003
APVD H.WAKEEM 18JUL2003
PRODUCT SPEC -
APPLICATION SPEC -
WEIGHT -

TE Connectivity

NAME SEAL, PANEL
-
-

SIZE	CAGE CODE	DRAWING NO	RESTRICTED TO
A3	00779	C-1445420	-

CUSTOMER DRAWING | SCALE 5:1 | SHEET 1 OF 1 | REV D

1470-19 (3/13)