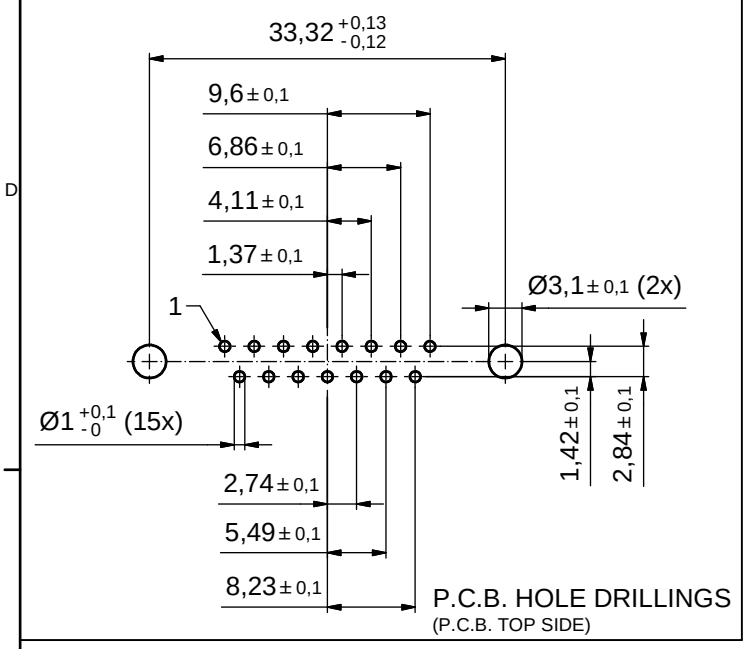

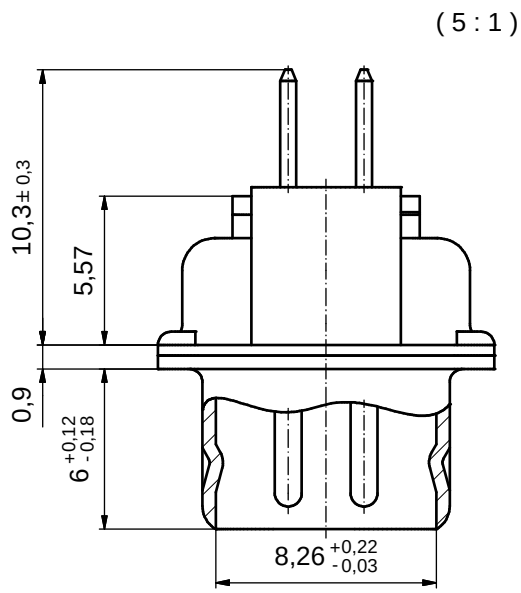

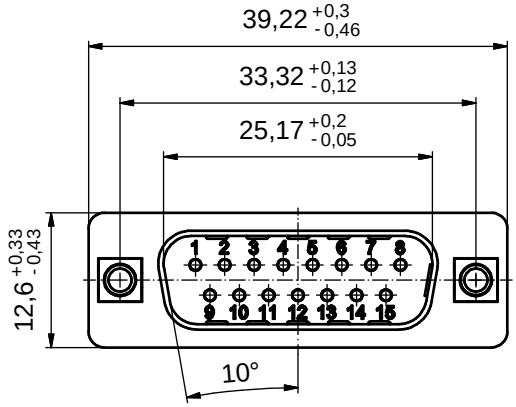

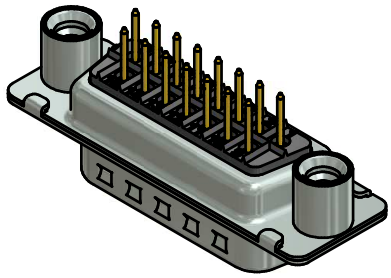

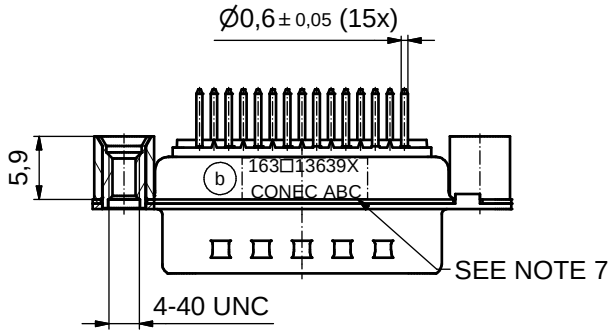

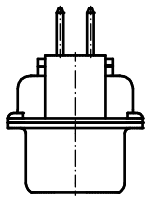

NOTES:

1. METALSHELLS: STEEL; min. 315µin TIN over 40-80µin NICKEL
2. INSULATORS: PBT GF UL 94 V-0; BLACK
3. (b) CONTACTS: COPPER ALLOY; PLATING (SEE PART NO.):
   - ☐ PLEASE ADD A for GOLD FLASH over NICKEL (PREFERRED TYPE)
   - ☐ PLEASE ADD B for 20µin HARD GOLD over min. 50µin NICKEL
   - ☐ PLEASE ADD C for 30µin HARD GOLD over min. 50µin NICKEL
4. THREADED REAR SPACERS: COPPER ALLOY; min. 200µin TIN over 80µin NICKEL
5. SLEEVES: COPPER ALLOY; min. 200µin TIN over 80µin NICKEL
6. MAXIMUM TORQUE VALUE FOR THREAD: 6 in.LB
7. CONNECTOR IS PART MARKED: 163□13639X CONEC ABC (see note 3)

Directive 2002/95/EC RoHS compliant

THIS DRAWING MAY NOT BE COPIED OR REPRODUCED IN ANY WAY, AND MAY NOT BE PASSED ON TO A THIRD PARTY WITHOUT WRITTEN PERMISSION. OWNERSHIP AND COPYRIGHT OF CONEC GmbH

DO NOT ALTER CAD DRAWING BY HAND

rev.	description	date	name
3 x b	Ä5058	31.01.14	Heinrich
a	Original		

tolerance — dim. in mm

	date	name
drawn	31.01.2014	M.Heinrich
appd.	31.01.2014	Lehmenkühler
norm		
d-old	16K1A801/16K1A906	

CONEC®

scale: 2:1 (5:1)
material: SEE NOTES

title:
D-SUB MALE
15pos. SOLDER PIN STRAIGHT
with threaded rear spacer

dwg no: 16K1A3385
DIN-A3
sh: 1

part no: (b) 163□13639X (see note 3)