Alle Rechte vorbehalten/ *All rights reserved*

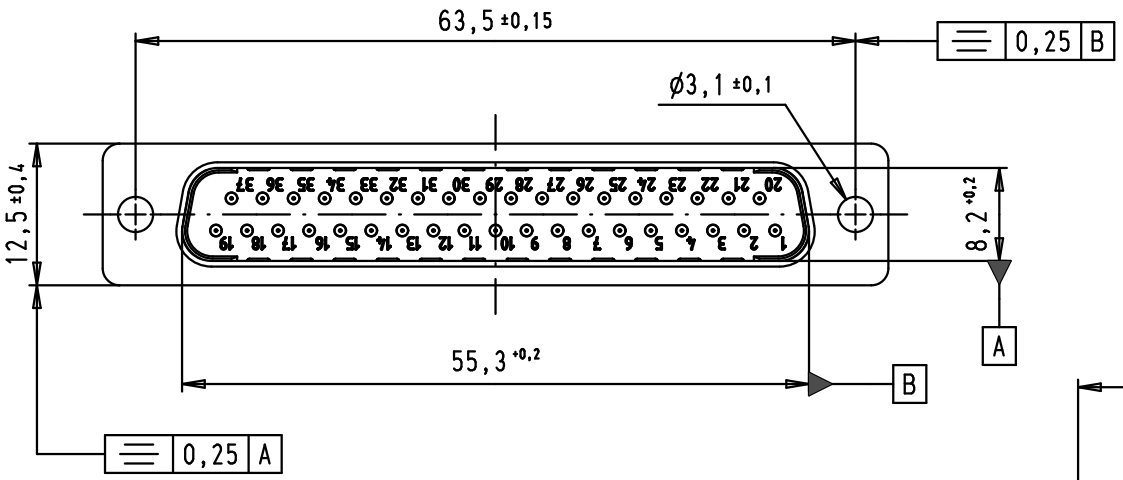


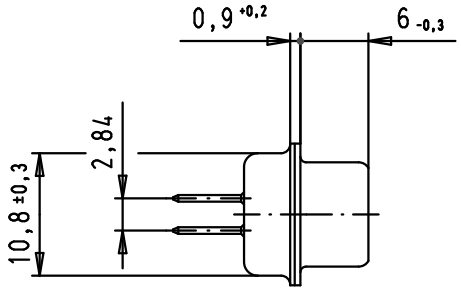


SPECIFICATIONS

| | |
|---|---|
| Performance level | PL2 |
| Filter type | C |
| Capacitance | 3900 pF±20% |
| Working voltage | 100 V |
| Current rating | 7,5 A |
| Insulation resistance | >1 GΩ |

| FREQUENCY (MHz) | ATTENUATION (dB) |
|---|---|
| 5 | 6 |
| 10 | 11 |
| 50 | 25 |
| 100 | 35 |
| 500 | 35 |
| 1000 | 32 |

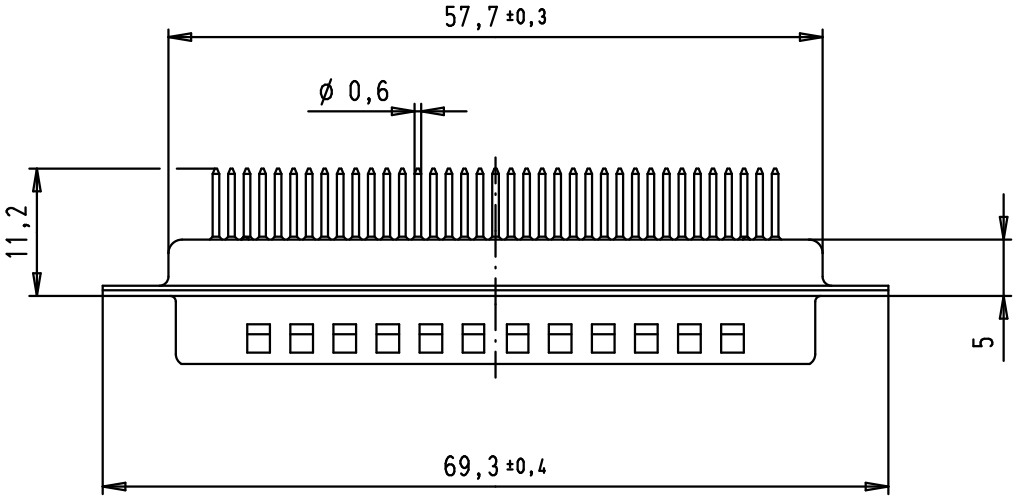


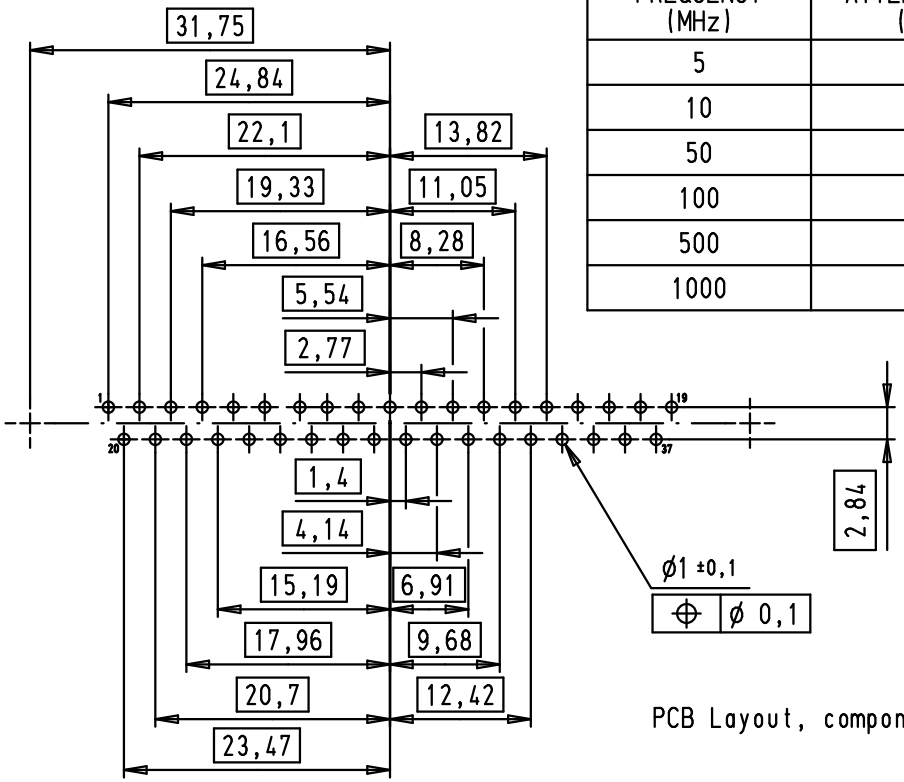


PCB Layout, component side

| | | | | Dat. | Name |
|---|---|---|---|---|---|
| | | | Detail. | 08/07/02 | CV |
| 36283 | 09/12/11 | SD | Insp. | 09/12/11 | JB |
| 35300 | 01/12/08 | PK | Stand. | | |
| 33800 | 16/08/06 | PK | | | |
| 31058 | 08/07/02 | CV | | | |
| Mod. | Dat. | Name | | | |

All Dim. in mm
Orig. Size DIN A 4

HARTING EURL
F-95972 Paris

D-Sub, male, straight,
37 poles,
turned solder pins

Maßstab/ *Scale* 1,5:1

TB 09 64 422 7240

Sub.

Blatt/ *Page* 1/1