THIS DRAWING IS UNPUBLISHED. RELEASED FOR PUBLICATION -.- .
© COPYRIGHT - By - ALL RIGHTS RESERVED.

REVISIONS

P	LTR	DESCRIPTION	DATE	DWN	APVD
	M	REVISED PER ECO-16-001548	24FEB2016	AP	DG

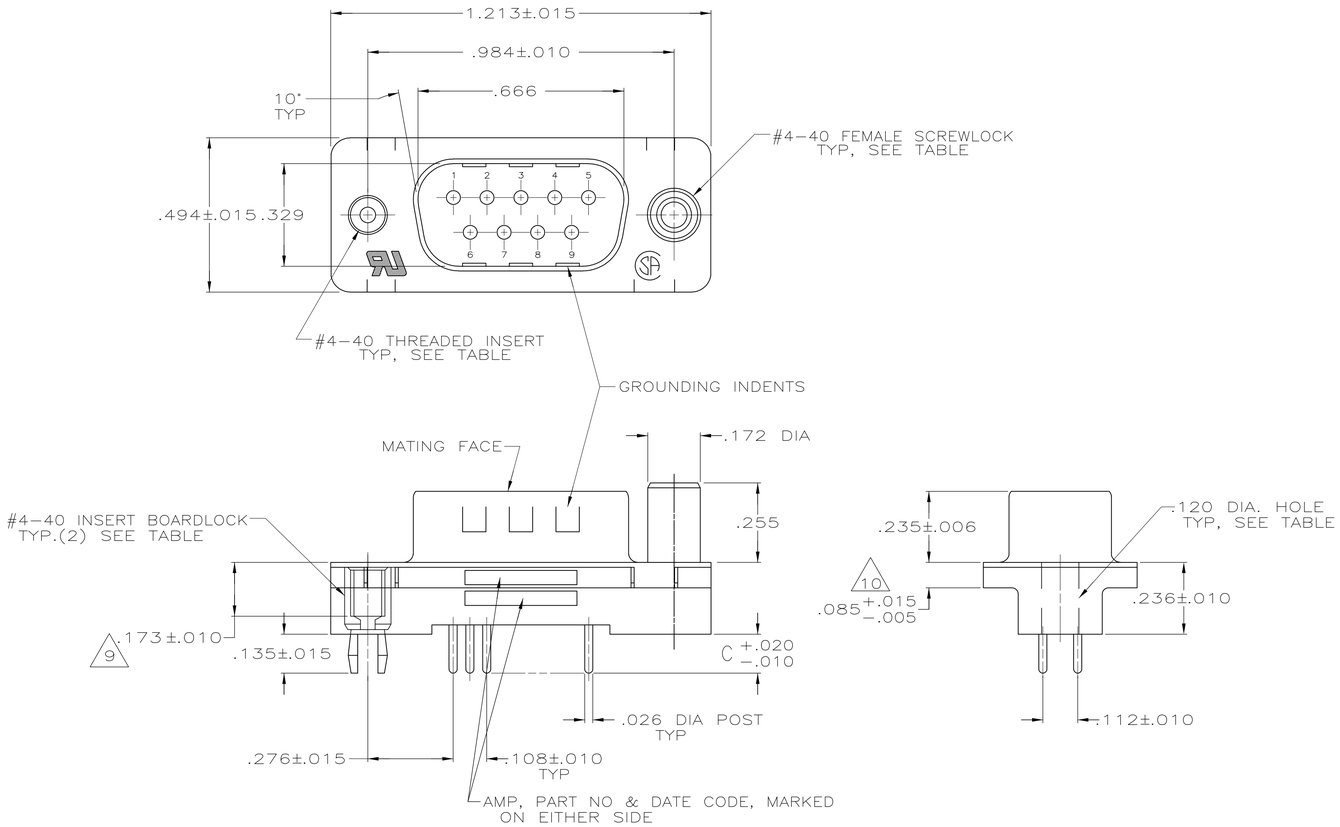

1. HOUSING: FLAME RETARDANT 94V-O RATED THERMOPLASTIC, BLACK
SHELLS: CARBON STEEL
CONTACTS: BRASS
INSERTS AND RETENTION INSERTS: BRASS
SCREWLOCKS: ZINC

2. SHELLS: .000200 MIN TIN OVER .000100 MIN COPPER.
INSERTS: UNPLATED.
RETENTION INSERTS: .00150 MIN TIN-LEAD OVER .000100 MIN COPPER.
SCREWLOCKS: UNPLATED.
CONTACTS: SEE TABLE.

3. GOLD FLASH FOR A LENGTH OF .150 MIN FROM MATING END, .000100-.000200 BRIGHT TIN OR BRIGHT TIN-LEAD ON SOLDER END, ALL OVER .000050 MIN NICKEL ON ENTIRE CONTACT.

4. GOLD PLATED FOR A LENGTH OF .150 FROM MATING END, .000030 MIN GOLD IN MATED AREA, .000100-.000200 BRIGHT TIN OR BRIGHT TIN-LEAD ON SOLDER END, ALL OVER .000050 MIN NICKEL ON ENTIRE CONTACT.
-OR-
GOLD FLASH OVER PALLADIUM NICKEL PLATED FOR LENGTH OF .150 FROM MATING END, .000030 MIN PALLADIUM NICKEL IN MATED AREA, .000100-.000200 BRIGHT TIN OR BRIGHT TIN-LEAD ON SOLDER END, ALL OVER .000050 MIN NICKEL ON ENTIRE CONTACT.

5. NOTE DELETED.

6. VERSION AVAILABLE UPON REQUEST.

7. OBSOLETE PART NUMBER.

8. DATUMS AND BASIC DIMENSIONS ESTABLISHED BY CUSTOMERS.

9. RECOMMENDED SCREWLOCK IS 5747877-3 WITH RETENTION INSERTS.

10. .110 MAX IN SHELL TAB CLINCH AREAS.

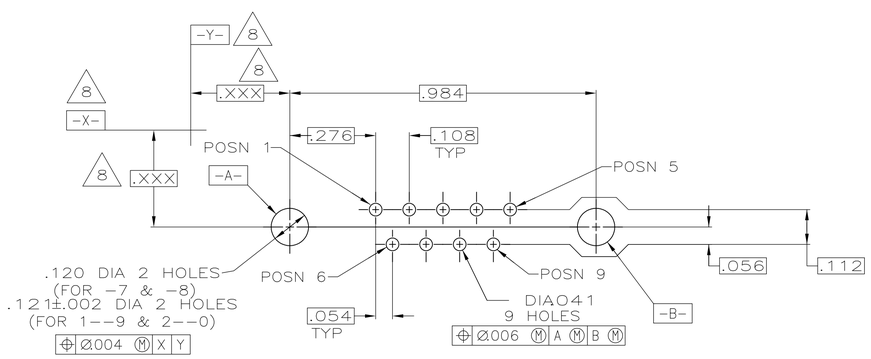

PC BOARD MOUNTING DIMENSIONS
CONNECTOR SIDE OF BOARD
.062 PC BOARD THICKNESS

SUPSD BY 2-748003-0	WITH RETENTION INSERTS	4	.125	2-748003-0
		3	.125	1-748003-9
	WITH FEMALE SCREWLOCKS	4	.250	6
		3	.250	6
		4	.170	6
		3	.170	6
		4	.125	6
		3	.125	6
SUPERSEDED BY 747871-8	WITH THREADED INSERTS	4	.250	6
		3	.250	6
		4	.170	6
		3	.170	6
		4	.125	748003-8
		3	.125	7 748003-7
	WITH .120 DIA. HOLE	4	.250	6
		3	.250	6
		4	.170	6
		3	.170	6
		4	.125	6
		3	.125	6
	REMARKS	CONTACT FINISH	DIM A	PART NUMBER

THIS DRAWING IS A CONTROLLED DOCUMENT.

DIMENSIONS: INCHES

TOLERANCES UNLESS OTHERWISE SPECIFIED:
0 PLC ± -
1 PLC ± -
2 PLC ± -
3 PLC ± .005
4 PLC ± -
ANGLES ± 2°

MATERIAL 1

FINISH 2
CONTACTS: SEE TABLE

DWN S. WELDON 2-27-85
CHK J. GERACE 2-27-85
APVD R. BRANDT 2-27-85

PRODUCT SPEC 108-40025
APPLICATION SPEC 114-40023
WEIGHT -

TE Connectivity

NAME PLUG ASSEMBLY, SIZE 1, 9 POS., VERTICAL, .026 DIA. DUPLEX PLATED TM

SIZE	CAGE CODE	DRAWING NO	RESTRICTED TO
A1	00779	C-748003	-

CUSTOMER DRAWING SCALE NTS SHEET 1 OF 1 REV M

4805 (1/15)