SIGN	DATE	DESCRIPTION	APPROVER
1	09/23`14	Added cULus standard	Airy min
2	09/23`14	update the drawing	Airy min

THIS IS CAD DRAWING, DO NOT REVISE MANUALLY!!!

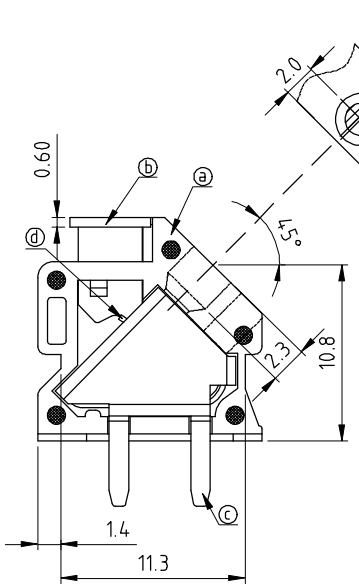

Section N-N

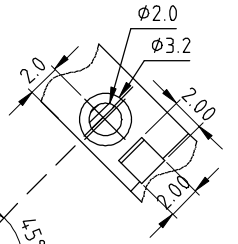

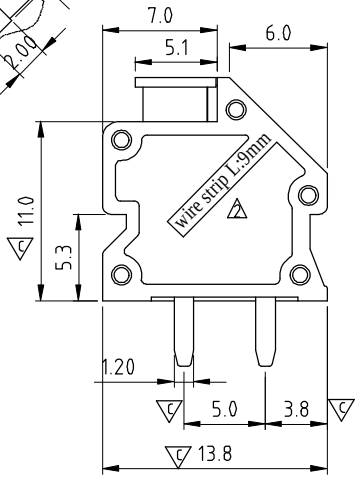

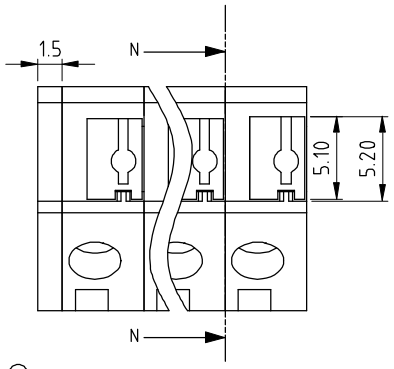

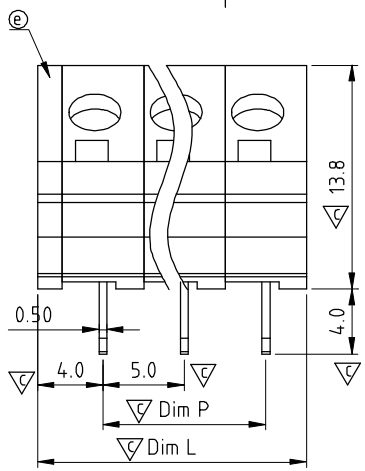

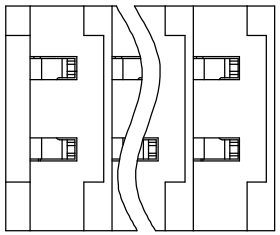

Material

- Item ⓐ Insulating body — Thermoplastic (UL94V-0)
- Item ⓑ Insulating lever — Thermoplastic (UL94V-0) Grey RAL7004/P
- Item ⓒ Contact pin — Brass, Tin plated
- Item ⓓ Spring clamp — Stainless steel
- Item ⓔ Insulating cover — Thermoplastic (UL94V-0)

Electrical — cULus

- Voltage rating: 300VAC
- Current rating: 7A
- Wire range:
- Solid wire(AWG): 16-24
- Stranded wire(AWG): 16-24
- Wire strip length: 8-9mm
- Withstanding Voltage: 1.6KV
- Operating temperature: -40°C to +115°C
- Soldering temperature: 260°C±5°C/5 Sec
- Safety Approval: c UL us
- Critical dimension:

NX xx 00 x 0 xxxx G

- xx — No. OF POLES
  - 01: 1 POLES
  - 02: 2 POLES
  - ⋮
  - 24: 24 POLES
- x — Body Color
  - 0 Black (RAL9005)
  - 2 Red (RAL3001/D)
  - 3 Orange(RAL2011/P)
  - 4 Yellow(RAL1018/A)
  - 5 Green(RAL6018/T)
  - 6 Blue (RAL5015/A)
  - 8 Grey(RAL7004/P)
  - 9 White(RAL1102)
  - C Multiple colors
- xxxx
  - 0000 Standard @ Logo
  - 000A Standard ANY Logo
  - Any special item by customer request, please contact sales department.
- G — RoHs compliant (lead<4%) In copper Alloy

N=NUMBER OF POLES

Dim L	N×5.0+1.50
Dim P	(N-1)×5.0

POLES	Dim L	Dim P
1p	±0.1	
2p-6p	±0.15	±0.15
7p-12p	±0.2	±0.2
13p-18p	±0.3	±0.3
19p-24p	±0.4	±0.4

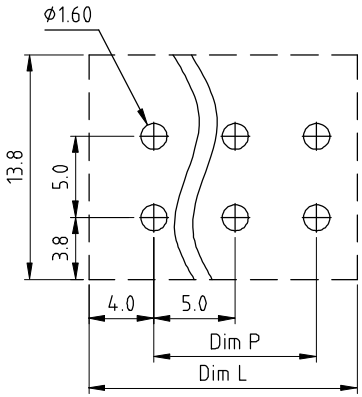

P.C.B. LAYOUT
Top view

ANYTEK

CUSTOMER COPY

ALL RIGHTS RESERVED. REPRODUCTION OR ISSUE TO THIRD PARTIES IN ANY FORM WHATEVER IS NOT PERMITTED WITHOUT WRITTEN AUTHORITY FROM THE PROPRIETOR. PROPERTY OF ANYTEK TECHNOLOGY CO., LTD

TITLE	NX-5.0mm 45° Series				
PART NO.	NXxx00x0xxxxG			DWG NO.	8NX0001
APPROVED	CHECKED	DESIGNED	DRAWN	CUST NO.	
		Airy min 2014.09.23	Airy min 2014.09.23	UNIT: mm	SCALE: NONE
				SHEET: 01/01	REV.: C

Tolerance	
X.	±0.50
X.X	±0.30
X.XX	±0.10
X°	±1°