PRODUCT NUMBER	SEE SHEET 2

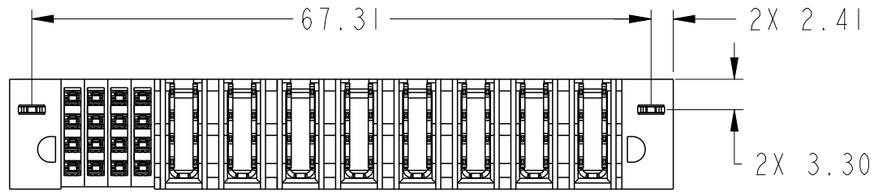

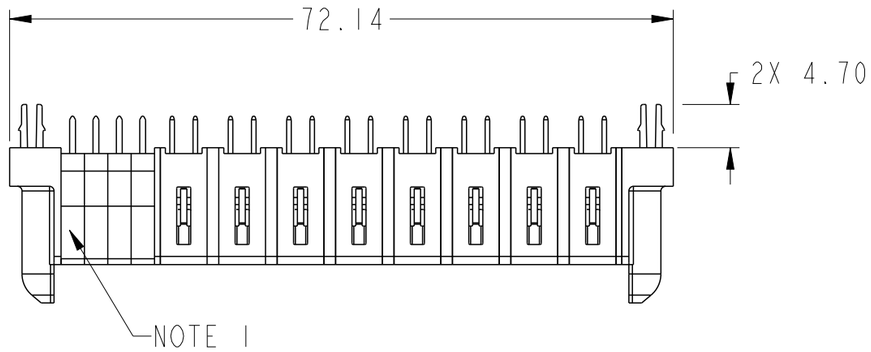

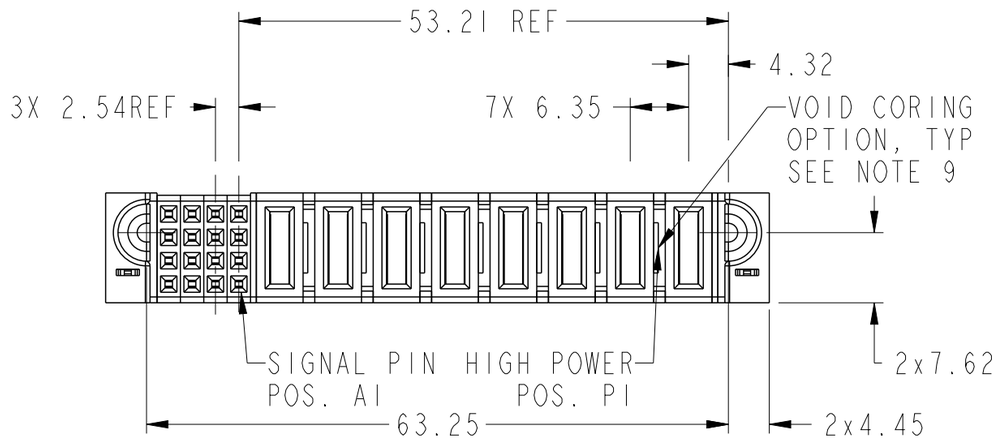

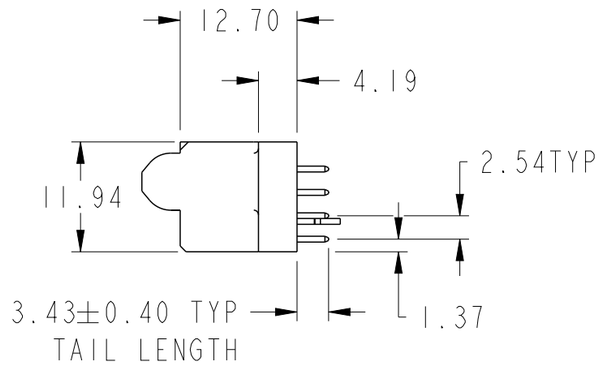

spec ref				dr	Peng-Bing Fu	2012/11/24	projection	MM	size A3 / scale 3:2
tolerance std ASME Y14.5	TOLERANCES UNLESS OTHERWISE SPECIFIED			eng	Peng-Bing Fu	2013/03/15			
				chr	-	-			ecn no -
				appr	Pei-Ming Zheng	2013/03/15	product family	PowerBlade+	rel level **Released**
surface ✓	linear	0.X	±0.50	FCI	title 8HP + 16S VT STB RECEPTACLE		dwg no 10106130-8004002		rev **A**
		0.XX	±0.25						
		0.XXX	±0.10						
ASME Y14.5	angular	0°	±2°	www.fci.com	cat. no.		Product - Customer Drw		sheet 1 of 3

Copyright FCI.

PRODUCT NO.	ROWS	SIGNAL				HIGH POWER								
		E1	4	3	2	1	P8	P7	P6	P5	P4	P3	P2	P1	E2
10106130-8004002LF	D C B A	HA	E	E	E	E	H3	H3	H3	H3	H3	H3	H3	H3	HA

CODE	DESCRIPTION
E	STD SIGNAL CONTACT
H3	STD HIGH POWER CONTACT (3.43)
HA	METAL HOLD DOWN

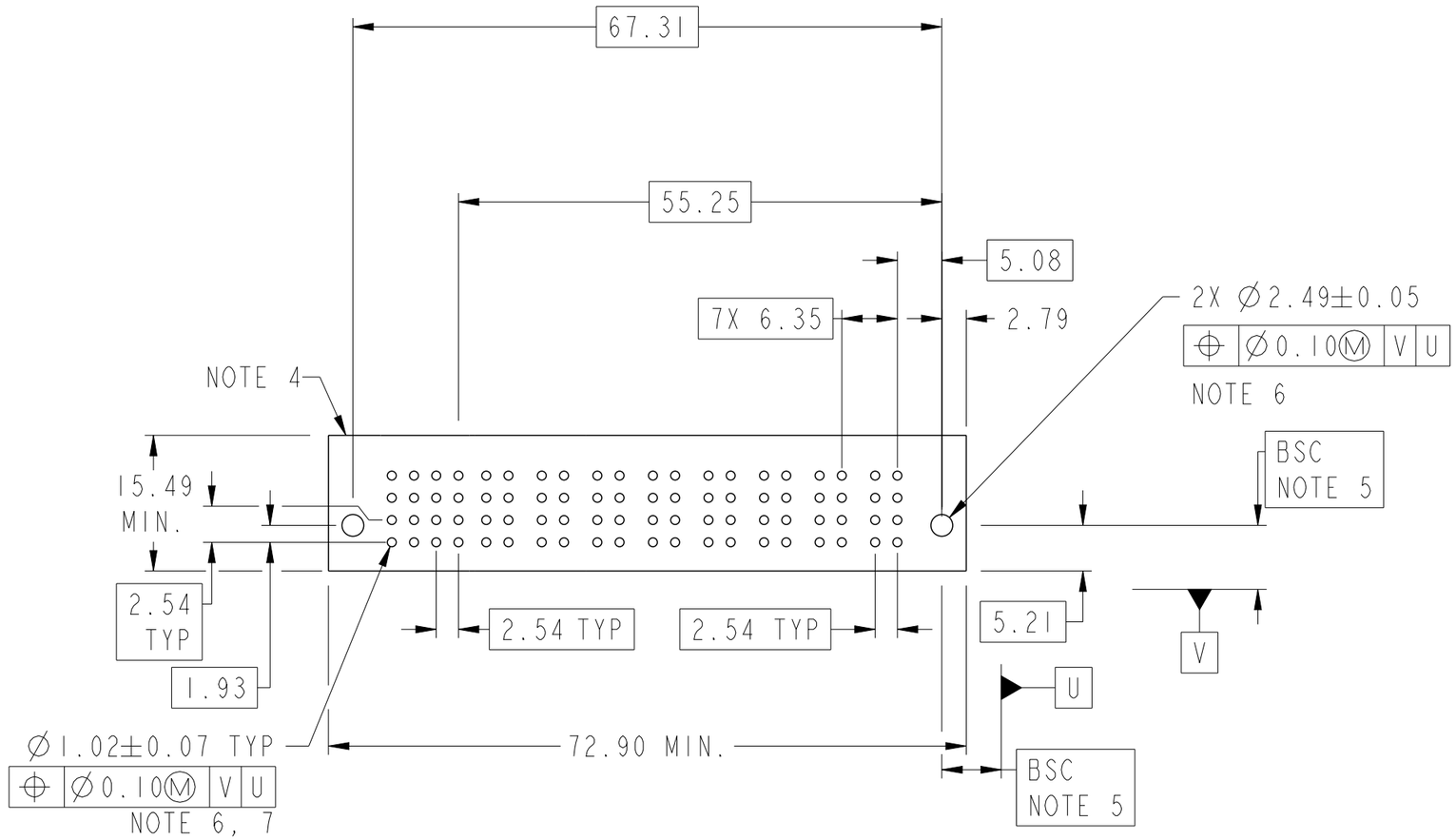

dr	Peng-Bing Fu	2012/11/24	projection	MM	size A3	scale 3:2
eng	Peng-Bing Fu	2013/03/15			ecn no	-
chr	-	-				
appr	Pei-Ming Zheng	2013/03/15	product family	PowerBlade+	rel level	Released
title	8HP + 16S VT STB RECEPTACLE		dwg no	10106130-8004002	rev	A
www.fci.com	cat. no.		Product - Customer Drw		sheet 2 of 3	

Copyright FCI.

Pro/E File - REV C - 2009-06-09

NOTES:

1) "FCI", PART NUMBER AND DATE CODE TO BE MARKED ON THIS SURFACE.
THE MARK CAN BE OMITTED IF THERE IS NOT ENOUGH SPACE ON THIS SURFACE.

2) MATERIALS:
-HOUSING - GLASS FILLED WITH HIGH TEMP THERMOPLASTIC, UL94V-0.
-SIGNAL CONTACT - COPPER ALLOY.
-POWER CONTACT - HIGH CONDUCTIVITY COPPER ALLOY.

3) PLATING SPECIFICATION REFER TO FCI 10116351

4) DENOTES CONNECTOR KEEP OUT ZONE.

5) DATUM AND BASIC DIMENIONS WERE ESTABLISHED BY CUSTOMER.

6) ALL HOLE DIAMETERS ARE FINISHED HOLE SIZES.

7) 1.15 ± 0.025MM DRILLED HOLE PLATED WITH 0.00762MM MIN Sn
OVER 0.0254-0.0762MM Cu PLATING TO ACHIEVE A 1.02 ± 0.07MM HOLE.

8) PRODUCT SPECIFICATION REFER TO FCI GS-12-658.
APPLICATION SPECIFICATION REFER TO FCI GS-20-141.
PRODUCT PACKAGED IN TRAYS, REFER TO FCI GS-14-1502.

9) THE VOID CORING IN BETWEEN POWER MODULES, SIGNAL
MODULES AND END MODULES ARE OPTIONAL AND THE SHAPE
MAY BE DIFFERENT FOR OPTIMIZE THE MOLDING PROCESS. THE
VOID CORING WILL NOT EFFECT TO PRODUCT FUNCTION.

Copyright FCI.

dr	Peng-Bing Fu	2012/11/24	projection	MM	size A3	scale 1:1
eng	Peng-Bing Fu	2013/03/15				
chr	-	-			ecn no	-
appr	Pei-Ming Zheng	2013/03/15	product family	PowerBlade+	rel level	Released
title	8HP + 16S VT STB RECEPTACLE		dwg no	10106130-8004002	rev	A
www.fci.com	cat. no.		Product - Customer Drw		sheet 3 of 3	