THIS DRAWING IS UNPUBLISHED. RELEASED FOR PUBLICATION 20
© COPYRIGHT 20 BY - ALL RIGHTS RESERVED.

REVISIONS

P	LTR	DESCRIPTION	DATE	DWN	APVD
	A	INITIAL RELEASE	04JUN2015	DL	CW

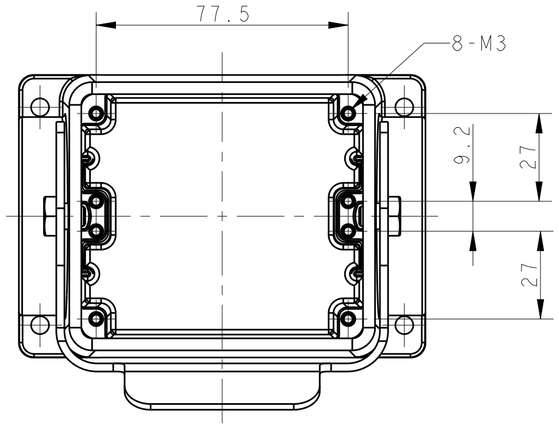

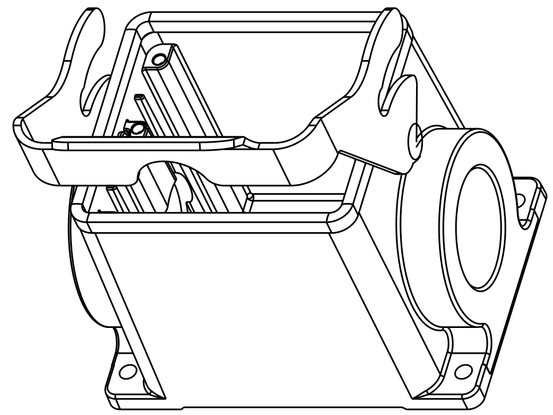

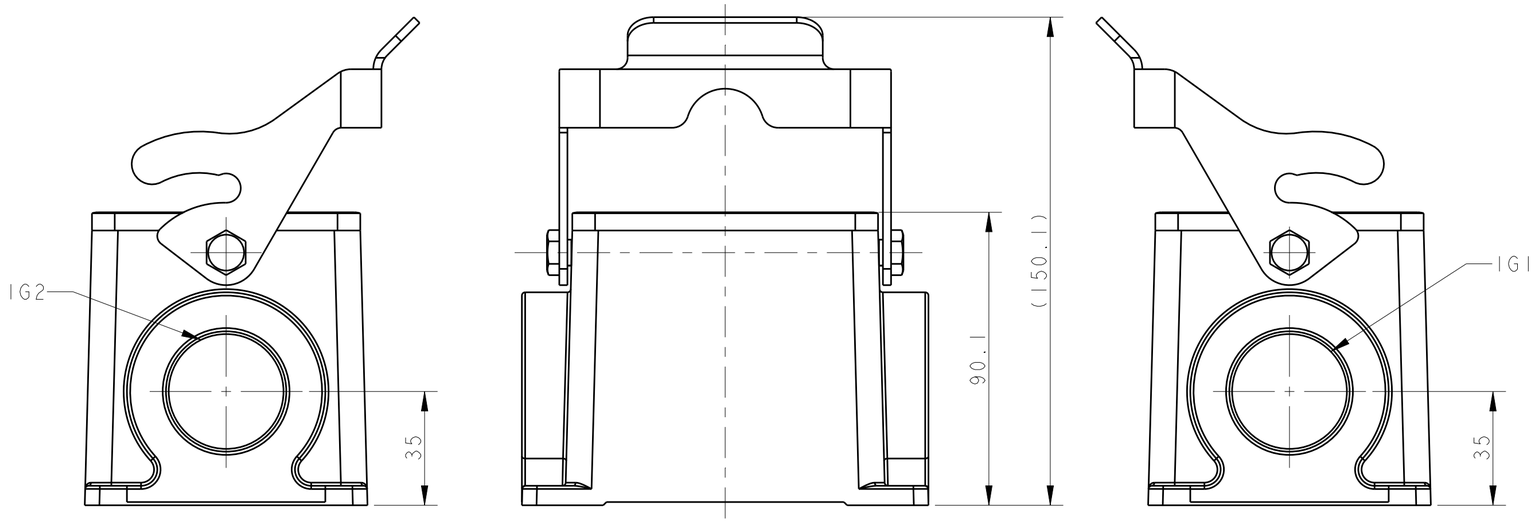

NOTES:
1. TECHNICAL CHARACTERISTICS:
   BODY MATERIAL: DIE CAST ALUMINIUM ALLOY
   SURFACE TREATMENT: POWDER-COATED, GRAY
   OPERATION TEMPERATURE: -40-+125°C
   DEGREE OF PROTECTION: IP65 (MATED)

注释：
1. 技术参数：
   主体材料： 铝合金
   表面处理： 粉末喷涂， 灰色
   工作温度： -40-+125°C
   防护等级： IP65(配合)

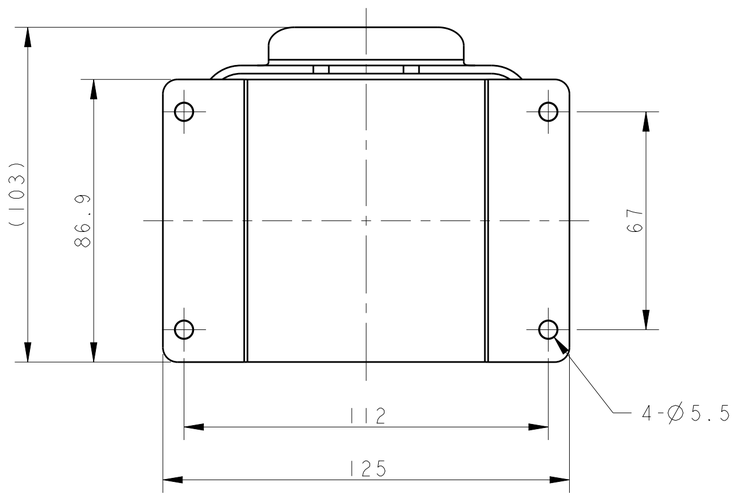

T1610322129-000	H32B-SGR-LB-PG29	PG29	-
T1610322132-000	H32B-SGR-LB-M32	M32	-
T1610322136-000	H32B-SGR-LB-PG36	PG36	-
T1610322140-000	H32B-SGR-LB-M40	M40	-
T1610322142-000	H32B-SGR-LB-PG42	PG42	-
T1610322150-000	H32B-SGR-LB-M50	M50	-
T1610322229-000	H32B-SGR-LB-2PG29	PG29	PG29
T1610322232-000	H32B-SGR-LB-2M32	M32	M32
T1610322236-000	H32B-SGR-LB-2PG36	PG36	PG36
T1610322240-000	H32B-SGR-LB-2M40	M40	M40
ASSEMBLY PART NUMBER	ASSEMBLY PART DESCRIPTION	IG1	IG2

THIS DRAWING IS A CONTROLLED DOCUMENT.

DIMENSIONS: mm

TOLERANCES UNLESS OTHERWISE SPECIFIED:
0 PLC ±-
1 PLC ±-
2 PLC ±-
3 PLC ±-
4 PLC ±-
ANGLES ±-

MATERIAL -
FINISH -
-
-

DWN 04JUN2015 DAVID LI
CHK 04JUN2015 CHRIS WANG
APVD 04JUN2015 XU XIANG
PRODUCT SPEC 108-137013
APPLICATION SPEC 114-137013
WEIGHT -

TE Connectivity

NAME H32B-SGR-LB-PG/M

SIZE	CAGE CODE	DRAWING NO	RESTRICTED TO
A2	-	C-T1610322XXX000	-

CUSTOMER DRAWING

SCALE 3:4 SHEET 1 OF 1 REV A

1471-9 (3/13)