LUG PATTERN "A"

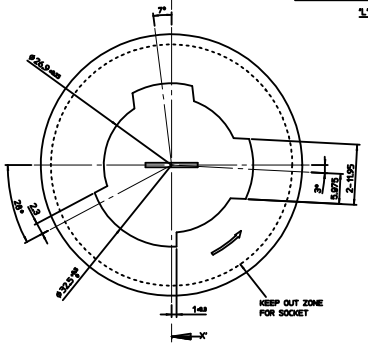

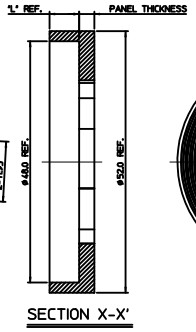

SECTION X-X'

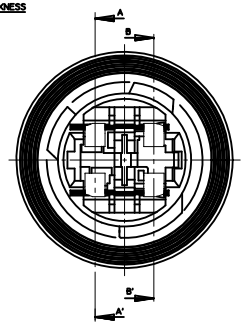

<TABLE 1>

LUG PATTERN	MATERIAL NO.	ORDER NO.	FOCAL LENGTH
"A"	104035032*	104035-032*	20.85
"B"	104035031*	104035-031*	
"C"	104035033*	104035-033*	
"D"	104035034*	104035-034*	
"A"	104036032*	104036-032*	22.35
"B"	104036031*	104036-031*	
"C"	104036033*	104036-033*	
"D"	104036034*	104036-034*	
"A"	49454032*	49454-032*	25.40
"B"	49454031*	49454-031*	
"C"	49454033*	49454-033*	
"D"	49454034*	49454-034*	

LUG PATTERN	MATERIAL NO.	ORDER NO.	FOCAL LENGTH
"A"	104037032*	104037-032*	29.45
"B"	104037031*	104037-031*	
"C"	104037033*	104037-033*	
"D"	104037034*	104037-034*	
"A"	104038032*	104038-032*	31.50
"B"	104038031*	104038-031*	
"C"	104038033*	104038-033*	
"D"	104038034*	104038-034*	
"A"	104039032*	104039-032*	34.90
"B"	104039031*	104039-031*	
"C"	104039033*	104039-033*	
"D"	104039034*	104039-034*	

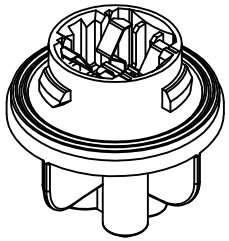

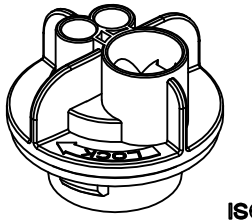

ISOVIEW

LUG PATTERN "B"

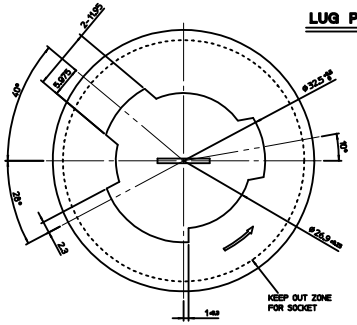

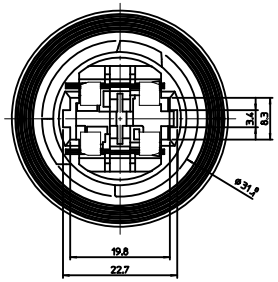

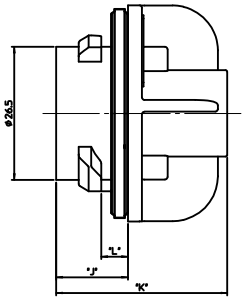

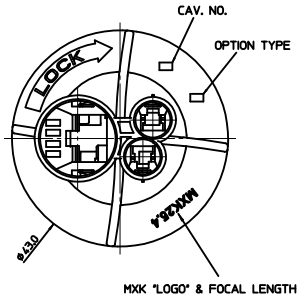

TYPE
0-SEALED
1-UNSEALED

LUG PATTERN
1 - LUG PATTERN "B"
2 - LUG PATTERN "A"
3 - LUG PATTERN "C"
4 - LUG PATTERN "D"

XXXXX - XXXX

MXK SERIES NO.
CIRCUIT NO.
SOCKET COLOR
0 - NATURAL
1 - BLACK
5 - GRAY

LUG PATTERN "C"

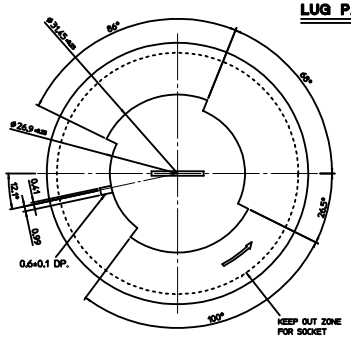

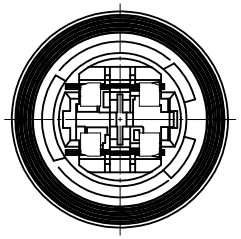

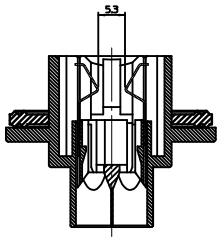

SECTION A-A'

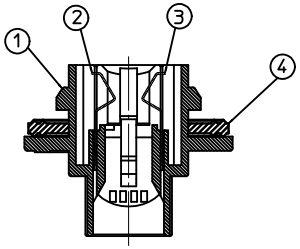

SECTION B-B'

ORDER NO.	FOCAL LENGTH	PANEL THICKNESS	SEAL THICKNESS	"L"	"J"	"K"
104035-XXXX	20.85	3.00mm ±0.1	3.8mm	5.90	10.40	34.0
104036-XXXX	22.35	3.00mm ±0.1	3.8mm	5.90	11.80	34.0
49454-XXXX	25.40	2.79mm ±0.1	3.3mm	5.30	14.25	34.0
104037-XXXX	29.45	3.00mm ±0.1	3.8mm	5.90	18.90	35.0
104038-XXXX	31.50	3.00mm ±0.1	3.8mm	5.90	20.95	35.0
104039-XXXX	34.90	3.00mm ±0.1	3.8mm	5.90	24.35	35.0

<NOTES>
1. APPLICABLE LAMP : P27/7W
2. PART MUST CONFORM TO SAE/USCAR-15.
3. MATES WITH

DESCRIPTION	MATERIAL	PART NO.	WIRE RANGE
SINGLE TERMINAL	BRASS	49869-9702	0.5~0.85mm²
DOUBLE TERMINAL	BRASS	49868-9702	0.5~0.85mm²
WIRE SEAL - S	SILICONE	49454-9002	1.8~2.2mm(INS. DIA.)
WIRE SEAL - L	SILICONE	49454-9003	1.8~2.2mm(INS. DIA.)
DUMMY SEAL	SILICONE	49454-9004	-

LUG PATTERN "D"

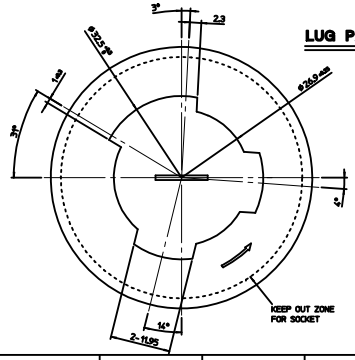

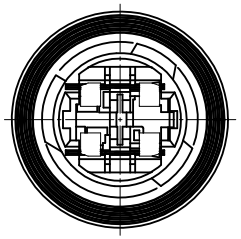

<PARTS LIST>

NO.	DESCRIPTION	MATERIAL	USAGE	REMARK
④	FLOOR SEAL	SILICONE	1	WHITE
③	LAMP HOLDER-R	SUS	1	UNPLATED
②	LAMP HOLDER-L	SUS	1	UNPLATED
①	S8 BULB SOCKET - D	PPE+PA, GF 30%	1	-
	S8 BULB SOCKET - C	PPE+PA, GF 30%		
	S8 BULB SOCKET - B	PPE+PA, GF 30%		
	S8 BULB SOCKET - A	PPE+PA, GF 30%		

REVISED
EC NO: KOR2010-0103 2010/10/27
DRWN:EOKIM 2010/10/28
CHKD:BCYOON 2010/10/28
APPR:YONSIKKIM 2010/10/28
DESCRIPTION
REV
A1

QUALITY SYMBOLS
▼=0
C=0

GENERAL TOLERANCES (UNLESS SPECIFIED)

	mm	INCH
4 PLACES	± ---	± ---
3 PLACES	± 0.20	± ---
2 PLACES	± 0.20	± ---
1 PLACE	± 0.30	± ---
ANGULAR	± 1 °	

DRAFT WHERE APPLICABLE MUST REMAIN WITHIN DIMENSIONS

DIMENSION STYLE: MM ONLY
SCALE: 2:1
DESIGN UNITS: METRIC
THIRD ANGLE PROJECTION

DRAWN BY: SMKIM DATE: 2009/03/17
CHECKED BY: BCYOON DATE: 2009/03/17
APPROVED BY: EHJUNG DATE: 2009/03/17

TITLE: SEALED S8 BULB SOCKET -AXIAL TYPE-

MOLEX INCORPORATED

MATERIAL NO.: SEE TABLE 1
DOCUMENT NO.: SD-49454-001
SHEET NO.: 1 OF 1
SIZE: A1

THIS DRAWING CONTAINS INFORMATION THAT IS PROPRIETARY TO MOLEX INCORPORATED AND SHOULD NOT BE USED WITHOUT WRITTEN PERMISSION