THIS DRAWING IS UNPUBLISHED. RELEASED FOR PUBLICATION -,- .
© COPYRIGHT - By - ALL RIGHTS RESERVED.

REVISIONS

P	LTR	DESCRIPTION	DATE	DWN	APVD
	F	REVISED PER ECR ECR-16-013298	02JUN2017	FL	SY

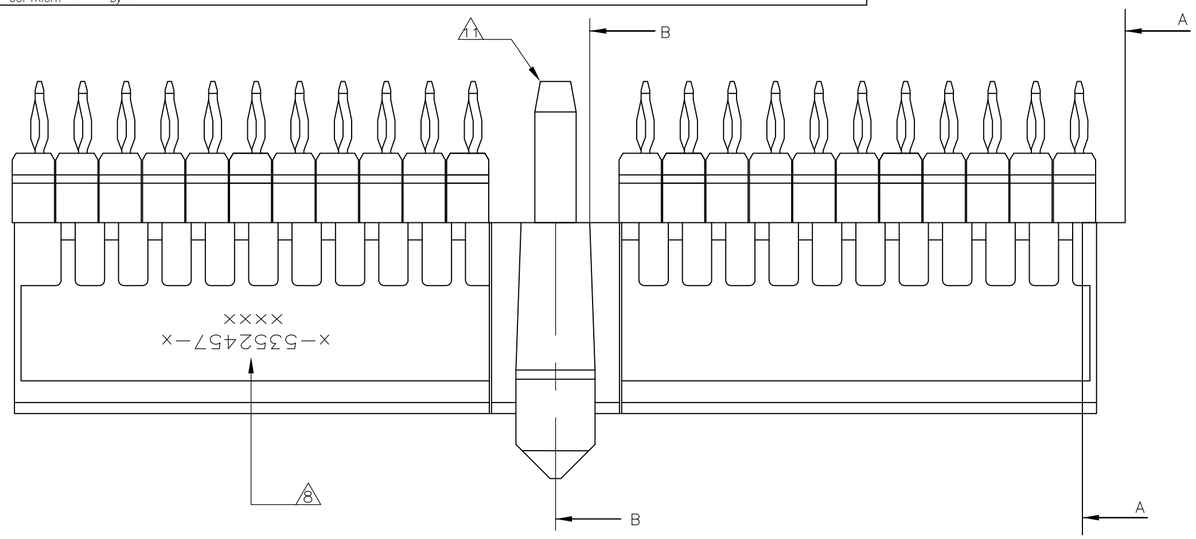

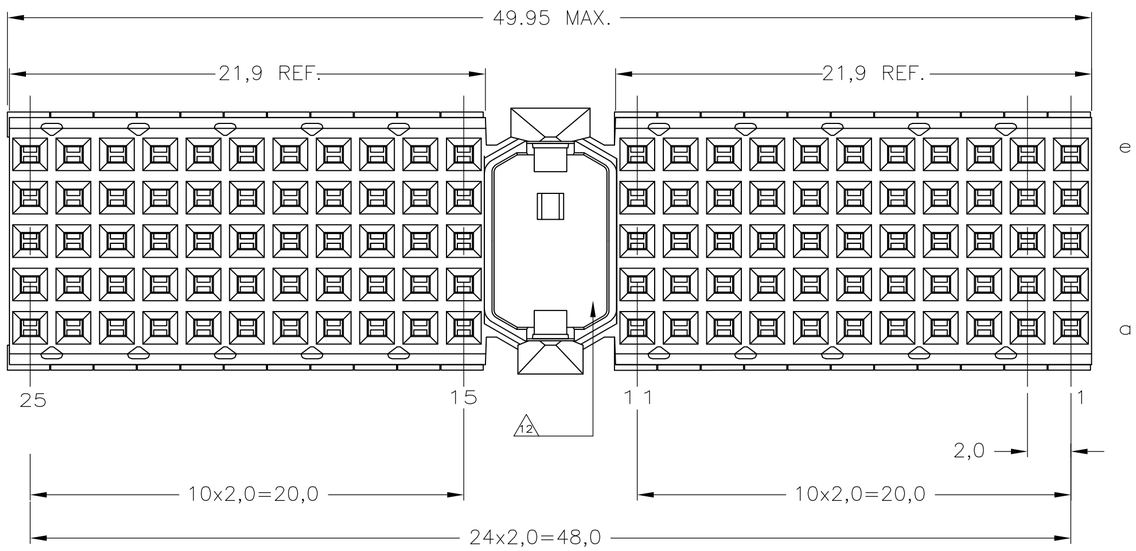

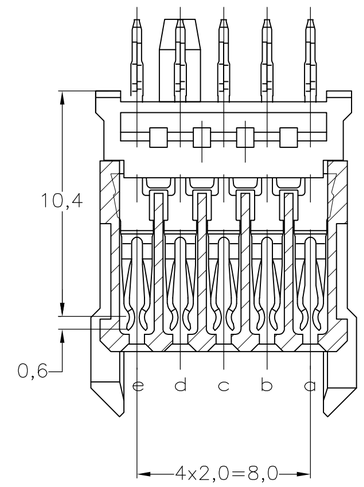

SECTION A-A

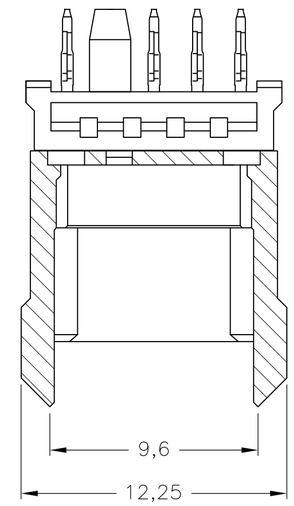

SECTION B-B

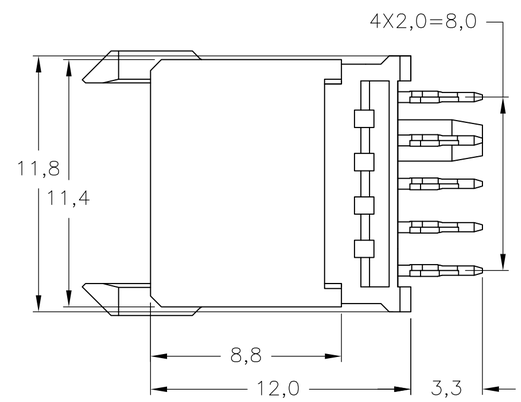

NOTES:

1. MATERIAL CONTACT; PHOSPHORBRONZE
   MATERIAL HOUSING; GLASSFILLED POLYESTER
   UL-RATING 94V0 (GRAY).
2. GENERAL PLATING SPECIFICATION: UNDERPLATING (ENTIRE CONTACT): 1,27µm NICKEL MIN. AND ACTION PIN: 0,5µm TIN MIN. FOR PLATING OF MATING SURFACES SEE APPLICABLE SPECIFICATION REFERENCE FOR EACH DASH NUMBER.
3. CONFORMS TO ALL TESTING ACCORDING IEC 61076-4-101 PERFORMANCE LEVEL 2.
4. CONFORMS TO ALL TESTING ACCORDING IEC 61076-4-101 PERFORMANCE LEVEL 1.
5. CONNECTOR TESTED AND QUALIFIED AGAINST TELCORDIA GR-1217-CORE QUALITY LEVEL III, CENTRAL OFFICE APPLICATIONS.
6. CONNECTOR TESTED AND QUALIFIED AGAINST TELCORDIA GR-1217-CORE QUALITY LEVEL III, UNCONTROLLED ENVIRONMENT APPLICATIONS.
7. CONNECTOR LUBRICATED WITH TELCORDIA GR-1217-CORE APPROVED LUBRICANT.
8. CONNECTOR PRINTED WITH PARTNUMBER AND DATECODE.
9. PLATED-THROUGH HOLES AT 2x2mm SQUARE GRID (110 HOLES).
10. HOLES IN ROW f AND z FOR POSSIBLE FUTURE USE OF GROUND RETURN SHIELD. (SHIELDS NOT YET TOOLED)
11. LOCATION PEG.
12. AREA RESERVED FOR KEYING PART (BASIC P.N.:100526).
13. OBSOLETE PARTS: OBSOLETE CIS STREAMLINING PER D.RENAUD/D.SINISI

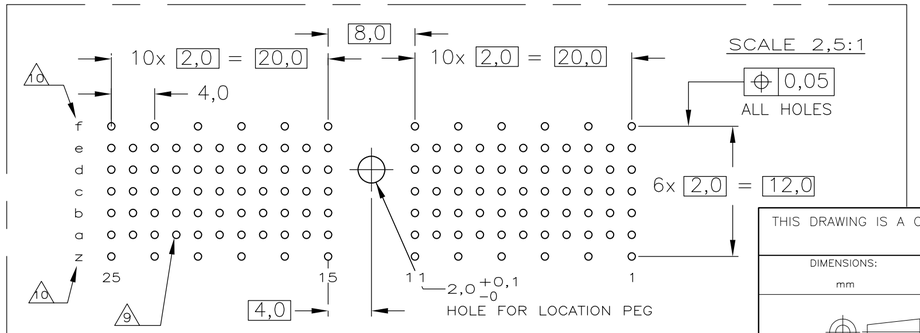

SCALE 2,5:1

COMPONENT SIDE AS SHOWN
RECOMMENDED PCB-HOLE LAY-OUT

P.C.B. HOLE DIM. ACTION PIN
FOR DETAILS SEE
APPLICATION SPECIFICATION

13 OBSOLETE	267	1	~~1-5352457-9~~
OBSOLETE	257	1	~~5352457-9~~
13 OBSOLETE	24	1	~~5352457-4~~
	23	1	5352457-1
	FINISH	MATERIAL	PARTNUMBER

THIS DRAWING IS A CONTROLLED DOCUMENT.

DIMENSIONS: mm

TOLERANCES UNLESS OTHERWISE SPECIFIED:
~~0 PLC~~ ± -
~~1 PLC~~ ± -
~~2 PLC~~ ± -
~~3 PLC~~ ± -
~~4 PLC~~ ± -
ANGLES ± -
±0.2

MATERIAL -
FINISH -

DWN K.N.KIRAN 25AUG2004
CHK B.MOOIJ 27OCT2004
APVD B.MOOIJ 27OCT2004
PRODUCT SPEC 108-19082
APPLICATION SPEC 114-19029
WEIGHT 0.000000
CUSTOMER DRAWING

TE Connectivity

NAME
Z-PACK 2mm HM TYPE A
110 POS. VERTICAL FEMALE CONNECTOR
WITH LOCATION PEG

SIZE	CAGE CODE	DRAWING NO	RESTRICTED TO
A2	00779	C-5352457	—

SCALE 5:1 SHEET 1 OF 1 REV F

5352457

1471-9 (1/15)