G-Series

Toggle Switches

General purpose workhorses with options tailored to meet most any need. Ratings to 20A 277VAC, international approvals, various actuator, bushing, termination, and circuit choices allow this toggle switch to easily integrate into a variety of different applications. The G-Series has a storied history in the Marine, Food Service, Generator, Industrial Control, and Office Automation markets and is appropriate for usage in low voltage DC applications as well.

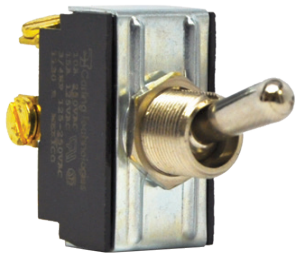

Carling Technologies®

Innovative Designs. Powerful Solutions.

Carling Technologies, Inc.
60 Johnson Avenue • Plainville, CT 06062-1177
Phone: (860) 793-9281 • Fax: (860) 793-9231
Email: sales@carlingtech.com • www.carlingtech.com

Dielectric Strength

UL/CSA: 1000V - live to dead metal parts & opposite polarity

VDE: 4000V - live to dead metal parts; 1250V - opposite polarity & across open contacts

Electrical Life

50,000 cycles - maintained
25,000 cycles - momentary

Mechanical Life

100,000 cycles

Operating Temperature

32°F to 185°F (0° to 85°C)

2GM51 - 73

1 Base Part Number — 2 Actuator Style

1 BASE PART NUMBER: SERIES/CIRCUITRY/RATING/TERMINATION[3]

Single Pole in Double Pole base — ***Double Pole***

10A 250VAC, 15A 125VAC, 3/4 HP 125-250VAC

solder lug	.250 tab	screw term.		solder lug	.250 tab	screw term.
2GA50	**2GA51**	**2GA54**	On-None-Off	**2GK50**	**2GK51**	**2GK54**
6GA5A	**6GA5B**	**6GA5E**	(On)-None-Off	**6GK5A**	**6GK5B**	**6GK5E**
6GA5L	**6GA5M**	**6GA5S**	On-None-(Off)	**6GK5L**	**6GK5M**	**6GK5S**
2GB50	**2GB51**	**2GB54**	On-None-On	**2GL50**	**2GL51**	**2GL54**
6GB5A	**6GB5B**	**6GB5E**	On-None-(On)	**6GL5A**	**6GL5B**	**6GL5E**
2GC50	**2GC51**	**2GC54**	On-Off-On	**2GM50**	**2GM51**	**2GM54**
6GC5A	**6GC5B**	**6GC5E**	On-Off-(On)	**6GM5A**	**6GM5B**	**6GM5E**
6GC5L	**6GC5M**	**6GC5S**	(On-Off-(On)	**6GM5L**	**6GM5M**	**6GM5S**
10A 250VAC, 15A 125VAC, 12 (6)A 250VAC T85/55 ENEC/VDE Approved[1]						
2GA90	**2GA91**	**-**	On-None-Off	**2GK90**	**2GK91**	
2GB90	**2GB91**	**-**	On-None-On	**2GL90**	**2GL91**	
2GC90	**2GC91**	**-**	On-Off-On	**2GM90**	**2GM91**	

Additional ratings up to 20A 125VAC, 12A 250VAC, 1HP 120-240 VAC available. Consult factory for specifics.

2 ACTUATOR STYLE[4]

	unsealed	sealed	toggle length	bushing length
BAT[5]	**73**	**78**	0.687	0.465
PADDLE[5]	**NBL3**	**NBL8**	0.687	0.465
BAT[2]	**D-3B-B**	**-**	0.687	0.379
PADDLE[2]	**-**	**D-4B-B**	0.687	0.379

Notes:

1 Not available with 73 or NBL3 style toggles, T55 with 78 and NBL8 style toggles.
2 All nylon bushing and toggle.
3 Consult factory for .187 tab, wire lead and combination screw/tab/solder lug termination callouts.
4 Additional actuator options available. Consult factory.
5 Nylon toggle with black ebanol plated bushing.
( ) Indicates momentary function.

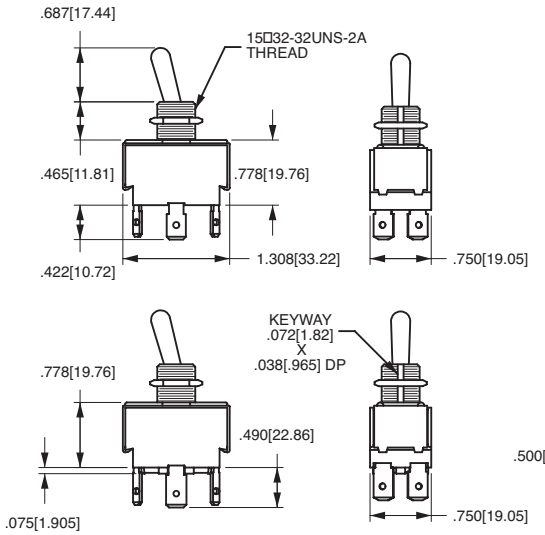

IEC APPROVED CONSTRUCTION

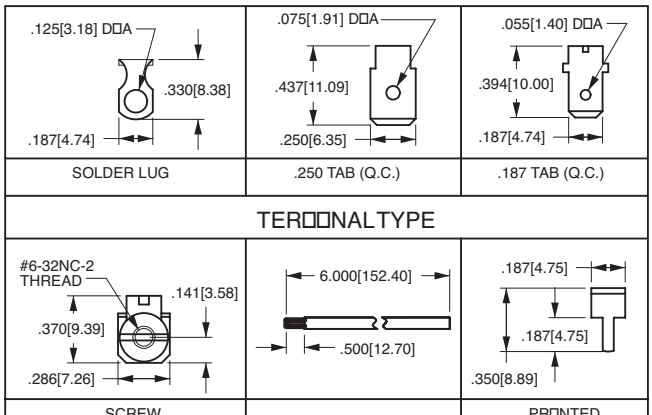

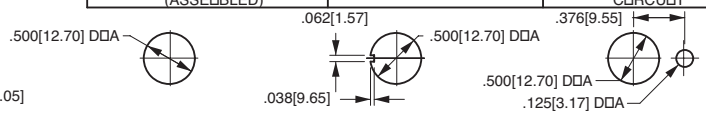

MOUNTING HOLE — WITH KEYWAY — WITH LOCKING RING

*Manufacturer reserves the right to change product specification without prior notice.

REV_SW_G_0912

60 Johnson Avenue • Plainville, CT 06062–1177 • Phone: (860) 793–9281 • Fax: (860) 793–9231
Email: sales@carlingtech.com • www.carlingtech.com