THIS DRAWING IS UNPUBLISHED. RELEASED FOR PUBLICATION 20
© COPYRIGHT 20 BY - ALL RIGHTS RESERVED.

LOC	DIST
CM	00

REVISIONS

P	LTR	DESCRIPTION	DATE	DWN	APVD
	G1	REVISED PER ECR-16-011506	27JUN2017	NK	CX

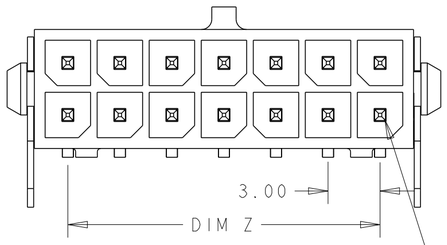

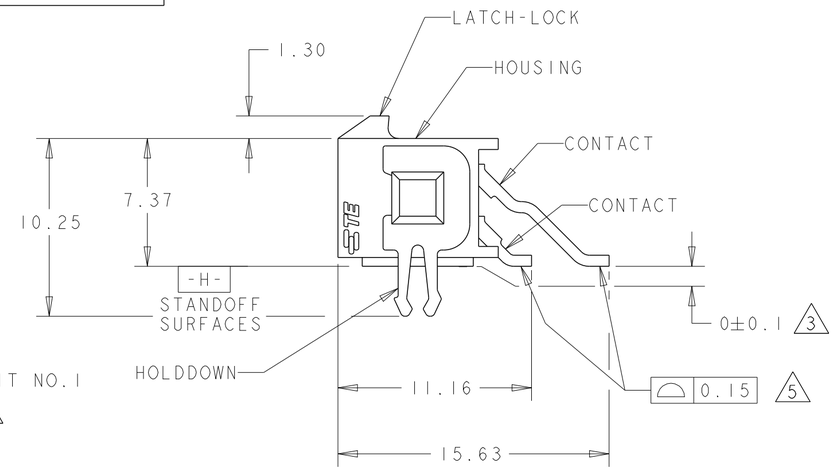

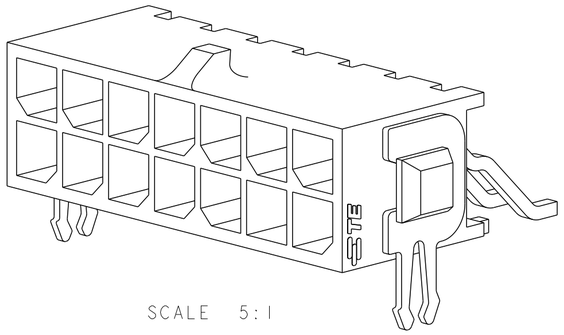

SCALE 5:1

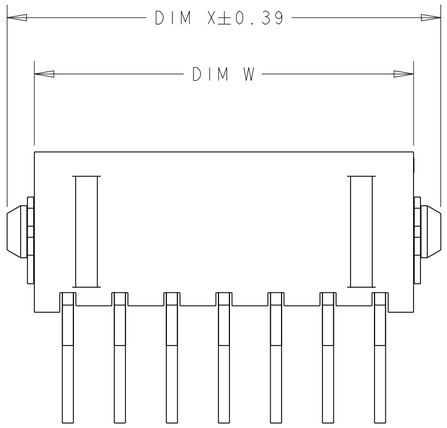

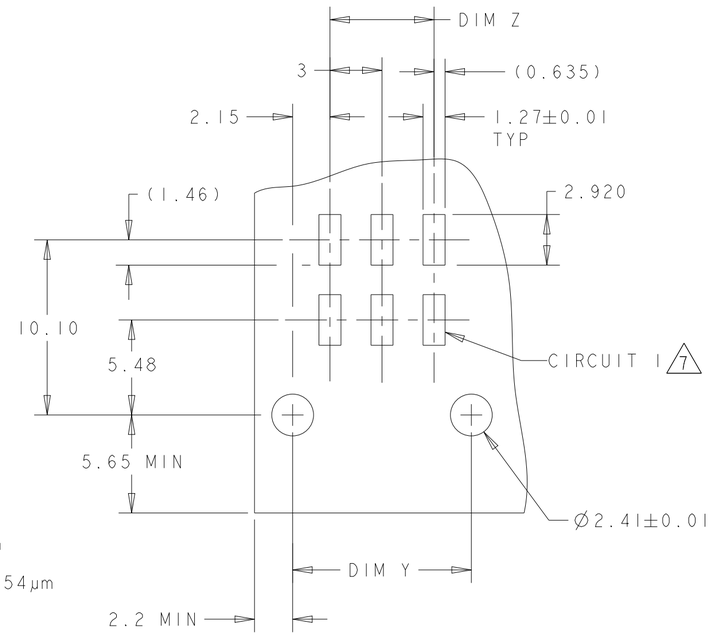

RECOMMENDED PCB LAYOUT 4
(COMPONENT SIDE)

1 MATERIAL;
CONTACTS - BRASS.
HOUSING - UL 94V-0 RATED HIGH TEMP NYLON, COLOR; BLACK.
HOLDDOWNS - PHOSPHOR BRONZE.

2 PLATING;
CONTACTS - 0.76µm MINIMUM GOLD OVER 2.54µm MINIMUM NICKEL ON MATING AREA. 2.54µm TIN-LEAD MINIMUM OVER 2.54µm NICKEL MINIMUM ON SOLDER TAILS.
HOLDOWNS - 2.54µm TIN LEAD.

3 DIMENSION APPLIES TO SOLDERTAIL SURFACES AND STANDOFF SURFACES.

4 RECOMMENDED PC BOARD THICKNESS OF 1.57.

5 ALL SOLDERTAILS.

6 PLATING;
CONTACTS - 0.76µm MINIMUM GOLD OVER 2.54µm MINIMUM NICKEL ON MATING AREA. 2.54µm MATTE TIN MINIMUM OVER 2.54µm NICKEL MINIMUM ON SOLDER TAILS.
HOLDOWNS - 2.54µm MATTE TIN.

7 CIRCUIT NUMBER 1 IS LOCATED AT THE BOTTOM RIGHT WITH THE LATCH-LOCK ON TOP LOOKING INTO THE CAVITIES

	FINISH	DIM W	DIM Y	DIM Z	DIM X	NO. OF POSN.	PART NUMBER
	6	36.86	37.30	33.00	40.00	24	5-794626-4
	6	33.86	34.30	30.00	37.00	22	5-794626-2
	6	30.86	31.30	27.00	34.00	20	5-794626-0
	6	27.86	28.30	24.00	31.00	18	4-794626-8
	6	24.86	25.30	21.00	28.00	16	4-794626-6
	6	21.86	22.30	18.00	25.00	14	4-794626-4
	6	18.86	19.30	15.00	22.00	12	4-794626-2
	6	15.86	16.30	12.00	19.00	10	4-794626-0
	6	12.86	13.30	9.00	16.00	8	3-794626-8
	6	9.86	10.30	6.00	13.00	6	3-794626-6
	6	6.86	7.30	3.00	10.00	4	3-794626-4
	6	3.86	4.30	-	7.00	2	3-794626-2
SUPERSEDED BY 5-794626-4	2	36.86	37.30	33.00	40.00	24	~~2-794626-4~~
SUPERSEDED BY 5-794626-2	2	33.86	34.30	30.00	37.00	22	~~2-794626-2~~
SUPERSEDED BY 5-794626-0	2	30.86	31.30	27.00	34.00	20	~~2-794626-0~~
SUPERSEDED BY 4-794626-8	2	27.86	28.30	24.00	31.00	18	~~1-794626-8~~
SUPERSEDED BY 4-794626-6	2	24.86	25.30	21.00	28.00	16	~~1-794626-6~~
SUPERSEDED BY 4-794626-4	2	21.86	22.30	18.00	25.00	14	~~1-794626-4~~
SUPERSEDED BY 4-794626-2	2	18.86	19.30	15.00	22.00	12	~~1-794626-2~~
SUPERSEDED BY 4-794626-0	2	15.86	16.30	12.00	19.00	10	~~1-794626-0~~
SUPERSEDED BY 3-794626-8	2	12.86	13.30	9.00	16.00	8	~~794626-8~~
SUPERSEDED BY 3-794626-6	2	9.86	10.30	6.00	13.00	6	~~794626-6~~
SUPERSEDED BY 3-794626-4	2	6.86	7.30	3.00	10.00	4	~~794626-4~~
SUPERSEDED BY 3-794626-2	2	3.86	4.30	-	7.00	2	~~794626-2~~

THIS DRAWING IS A CONTROLLED DOCUMENT.

DIMENSIONS: mm

TOLERANCES UNLESS OTHERWISE SPECIFIED:
0 PLC ±-
1 PLC ±-
2 PLC ±0.13
3 PLC ±-
4 PLC ±-
ANGLES ±-

MATERIAL 1

FINISH SEE TABLE

DWN K. WHITAKER 19MAR2003
CHK C. JONES 19MAR2003
APVD C. JONES 19MAR2003
PRODUCT SPEC -
APPLICATION SPEC -
WEIGHT -

TE Connectivity

NAME SURFACE MOUNT, RIGHT ANGLE, MECHANICAL HOLDDOWN, ASSEMBLY, 30 GOLD HEADER, DUAL ROW, MICRO MATE-N-LOK TM

SIZE	CAGE CODE	DRAWING NO	RESTRICTED TO
A2	00779	C-794626	-

CUSTOMER DRAWING SCALE 4:1 SHEET 1 OF 1 REV G1