THIS DRAWING IS UNPUBLISHED. RELEASED FOR PUBLICATION 20
© COPYRIGHT 20 BY - ALL RIGHTS RESERVED.

LOC	DIST
-	-

REVISIONS

P	LTR	DESCRIPTION	DATE	DWN	APVD
	B1	REVISED PER ECO-11-005150	28MAR11	RK	HMR

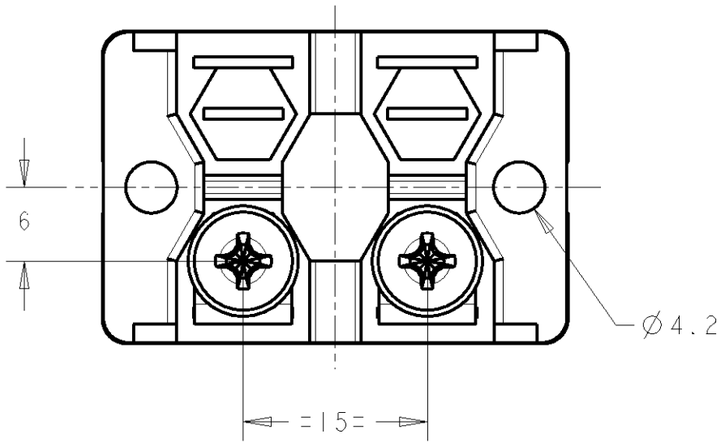

TYPE	POWER RATING AT 60°C	RESISTANCE	TOLERANCE
BDS 2A	100 Watts	1R to 1M0	K = ±10% J = ± 5%

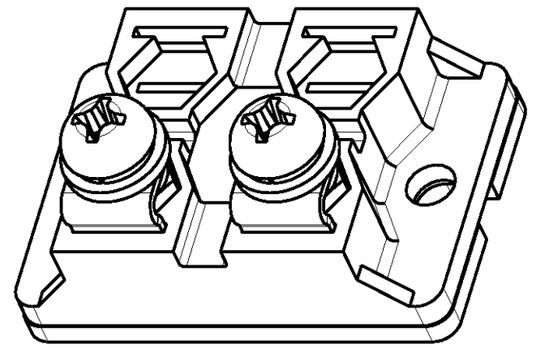

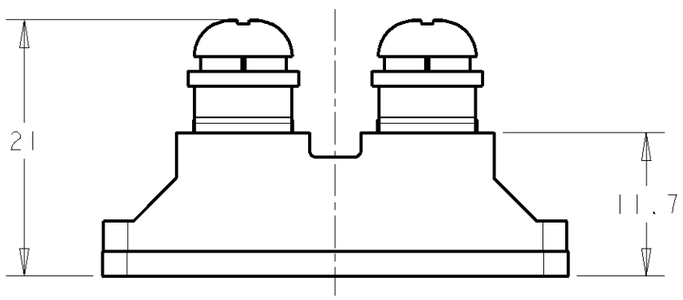

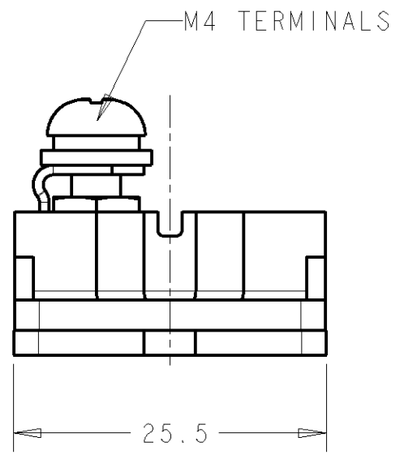

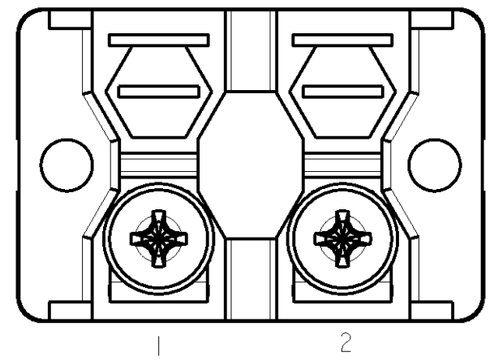

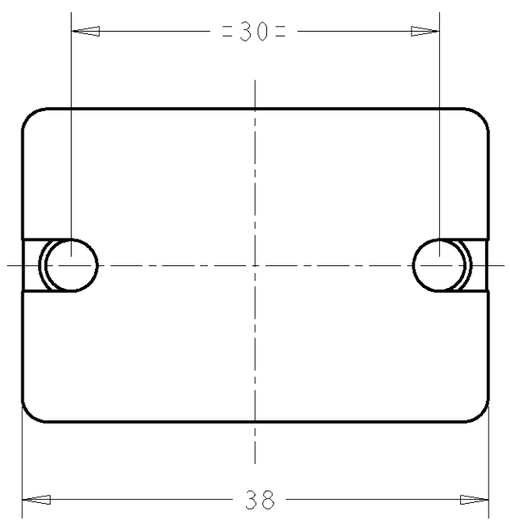

LIMITING ELEMENT VOLTAGE: 500V dc/ac rms (100W or less)
ISOLATION VOLTAGE (TERMINAL TO HEATSINK): 2.5kV
SINGLE SHOT (1,5/50ms): 4kV
MAXIMUM RATED POWER (HEATSINK TEMP @ 60°C): 100W
SHORT TERM OVERLOAD: 3 x RATED POWER, 10 sec's
PARTIAL DISCHARGE: <20pC/2kV

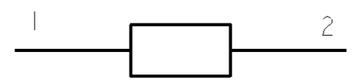

RoHS COMPLIANT

DIMENSIONS: mm

TOLERANCES UNLESS OTHERWISE SPECIFIED:

0 PLC	±0.5
1 PLC	±0.2
2 PLC	±0.02
3 PLC	±0.005
4 PLC	±0.0005
ANGLES	±0.5

MATERIAL -
FINISH -

DWN T MOORE 15MAR2005
CHK J CATCHPOLE 15MAR2005
APVD J CATCHPOLE 15MAR2005
PRODUCT SPEC -
APPLICATION SPEC -
WEIGHT 35g

TE Connectivity

NAME BDS2A100
-
-

SIZE	CAGE CODE	DRAWING NO	RESTRICTED TO
A3	00779	C-1614782	-

CUSTOMER DRAWING
SCALE 2:1 SHEET 1 OF 1 REV B1