PART NUMBER	ITEM ① BODY	ITEM ② CONTACT	ITEM ③ INTERFACE	ITEM ④ INSULATOR	ITEM ⑤ INSULATOR	ITEM ⑥ CRIMP SLEEVE	ITEM ⑦ END CAP
133-9402-101	COPPER ALLOY GOLD PL .00005 MIN OVER COPPER PL .00005 MIN	COPPER ALLOY GOLD PL .00005 MIN OVER COPPER PL .00005 MIN	COPPER ALLOY GOLD PL .00005 MIN OVER COPPER PL .00005 MIN	TEFLON	TEFLON	COPPER ALLOY GOLD PL .00005 MIN OVER COPPER PL .00005 MIN	COPPER ALLOY GOLD PL .00005 MIN OVER COPPER PL .00005 MIN

DRAWING NO.
C-133-9402-101/110

0	REVISIONS					
ENGINEERING RELEASE						
1	2-5-08	PAT	RJB	MJU	TJS	JCN	2-6-08 ECN 51376
VERSION UPDATE * REVISION NUMBER FOLLOWED BY AN ALPHA CHARACTER INDICATES DRAWING CLARIFICATION OR PART NUMBER ADDITION ONLY. *						
1a	1-22-09	PAT	RJB	MJU	RB	JCN	1-27-09 ECN 51755

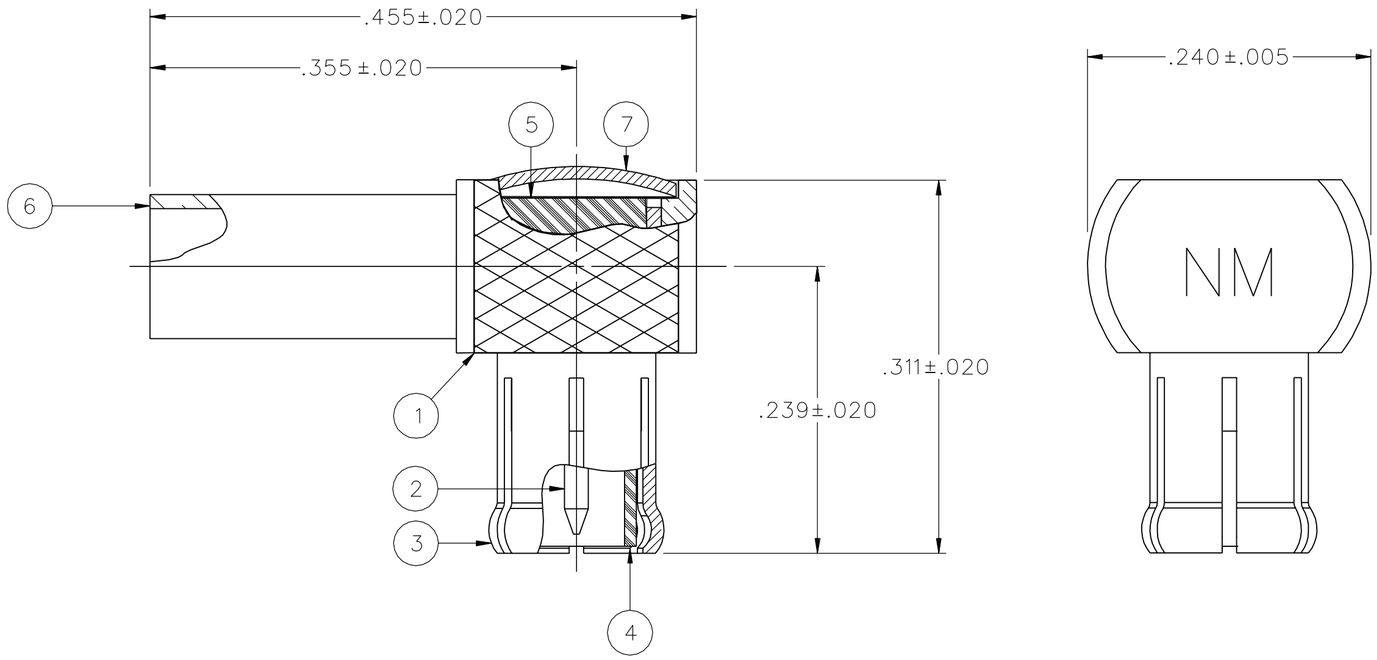

NOTES:

1. SPECIFICATIONS:

IMPEDANCE: 50 OHMS

WORKING VOLTAGE: 250 VRMS MAX AT SEA LEVEL
DIELECTRIC WITHSTANDING VOLTAGE: 750 VRMS MIN AT SEA LEVEL
INSULATION RESISTANCE: 10000 MEGOHM MIN
CONTACT RESISTANCE:
CENTER CONTACT - INITIAL 5 MILLIOHM MAX, AFTER ENVIRONMENTAL 15 MILLIOHM MAX
OUTER CONDUCTOR - GOLD PLATED INITIAL 1 MILLIOHM MAX, AFTER ENVIRONMENTAL 1.5 MILLIOHM MAX
NICKEL PLATED INITIAL 2.5 MILLIOHM MAX, AFTER ENVIRONMENTAL 3.5 MILLIOHM MAX
BODY TO CABLE - GOLD PLATED INITIAL 1 MILLIOHM MAX, AFTER ENVIRONMENTAL NOT APPLICABLE
NICKEL PLATED INITIAL 2.5 MILLIOHM MAX, AFTER ENVIRONMENTAL NOT APPLICABLE
CORONA LEVEL: 250 VOLTS MINIMUM AT 70,000 FEET
INSERTION LOSS: .2 DB MAX AT 1 GHz
RF LEAKAGE: -70 DB AT 2.5 GHz
RF HIGH POTENTIAL WITHSTANDING VOLTAGE: 500 VRMS AT 4 AND 7 MHz

MECHANICAL:

ENGAGE/DISENGAGE FORCE: 5.6 LBS MAX ENGAGEMENT
1.0/8.0 LBS MIN/MAX DISENGAGEMENT
CONTACT RETENTION FORCE: 2.3 LBS MIN AXIAL FORCE
CONTACT RETENTION TORQUE: NOT APPLICABLE
COUPLING MECHANISM RETENTION: NOT APPLICABLE
CABLE ACCEPTABILITY: RG 178, RG 196
CABLE HEX CRIMP SIZE: .105
CABLE RETENTION: 10 LBS MIN AXIAL FORCE
DURABILITY: 500 CYCLES MIN

ENVIRONMENTAL:

(MEETS OR EXCEEDS THE APPLICABLE PARAGRAPH OF MIL-PRF-39012)
THERMAL SHOCK: MIL-STD-202, METHOD 107, CONDITION F
OPERATING TEMPERATURE: -65 DEG C TO 165 DEG C
CORROSION: MIL-STD-202, METHOD 101, CONDITION B
SHOCK: MIL-STD-202, METHOD 213, CONDITION B
VIBRATION: MIL-STD-202, METHOD 204, CONDITION B
MOISTURE RESISTANCE: MIL-STD-202, METHOD 106

2. CONNECTOR MARKED "NM" FOR NON-MAGNETIC

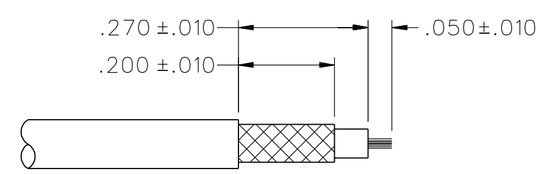

CABLE STRIP DIMENSIONS

4:1

CUSTOMER DRAWING

THIS DRAWING TO BE INTERPRETED PER ASME Y 14.5M - 1994

"μSTATION"

COMPANY CONFIDENTIAL

TOLERANCE UNLESS OTHERWISE SPECIFIED		DRAWN BY RJB	DATE 2-5-08
DECIMALS .XX	mm	CHECKED BY RJB	DATE 2-6-08
.XXX		APPROVED BY TJS	DATE 2-6-08
MATL		RELEASE DATE	2-6-08
FINISH		U/M INCH	SCALE 10:1

cinch CONNECTIVITY SOLUTIONS a bel group
Cinch Connectivity Solutions
P.O. Box 1732
Waseca, MN 56093
1-800-247-8256

TITLE
PLUG ASSEMBLY,
RIGHT ANGLE CABLED,
NON-MAGNETIC MCX, RG 178

SHEET 2 OF 2

DRAWING NO.
C-133-9402-101/110