THIS DRAWING IS UNPUBLISHED. RELEASED FOR PUBLICATION -,- .
© COPYRIGHT - BY TYCO ELECTRONICS CORPORATION. ALL RIGHTS RESERVED.

LOC	DIST
AJ	16

REVISIONS

P	LTR	DESCRIPTION	DATE	DWN	APVD
	G	REVISED PER ECO-10-008433	22MAY10	HMR	KW

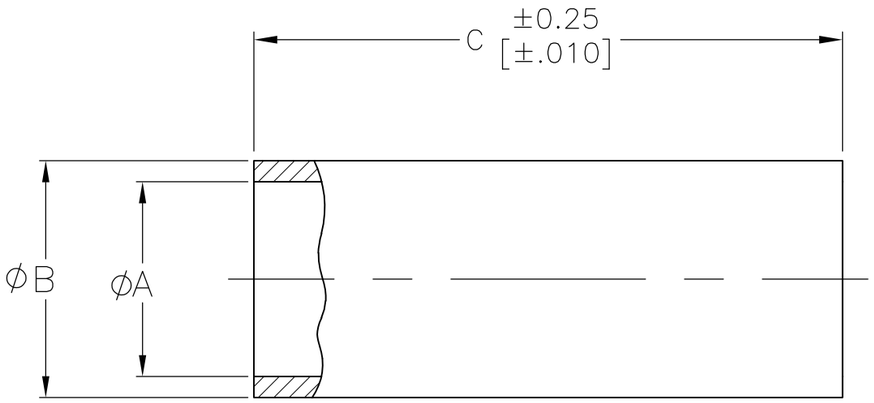

C	B	A	FINISH	PART NUMBER
9.60 [.380]	4.55 [.179]	3.51 [.138]	6	9-413889-1
9.60 [.380]	3.86 [.152]	3.20 [.126]	6	9-413889-0
9.60 [.380]	4.55 [.179]	3.51 [.138]	4	3-413889-4
7.87 [.310]	3.15 [.124]	2.49 [.098]	4	3-413889-3
7.87 [.310]	4.55 [.179]	3.20 [.138]	4	3-413889-2
7.87 [.310]	3.86 [.152]	3.20 [.126]	4	3-413889-1
7.87 [.310]	3.15 [.124]	2.49 [.098]	3	3-413889-0
7.87 [.310]	4.55 [.179]	3.51 [.138]	3	2-413889-7
7.87 [.310]	3.86 [.152]	3.20 [.126]	3	2-413889-4
9.60 [.380]	3.86 [.152]	3.20 [.126]	5	2-413889-1
9.60 [.380]	3.86 [.152]	2.67 [.105]	4	2-413889-0
9.60 [.380]	3.15 [.124]	2.49 [.098]	4	1-413889-9
9.60 [.380]	4.55 [.179]	3.51 [.138]	4	1-413889-8
9.60 [.380]	3.86 [.152]	3.20 [.126]	4	1-413889-7
9.60 [.380]	3.86 [.152]	2.67 [.105]	3	1-413889-6
9.60 [.380]	3.15 [.124]	2.49 [.098]	3	1-413889-5
9.60 [.380]	4.55 [.179]	3.51 [.138]	3	1-413889-4
9.60 [.380]	3.86 [.152]	3.20 [.126]	3	1-413889-3
9.60 [.380]	3.86 [.152]	2.67 [.105]	2	1-413889-2
9.60 [.380]	3.15 [.124]	2.49 [.098]	2	413889-9
9.60 [.380]	4.55 [.179]	3.51 [.138]	2	413889-6
OBSOLETE 9.60 [.380]	3.86 [.152]	3.20 [.126]	2	413889-3

1. COPPER ALLOY
2. BRIGHT TIN-LEAD PLATE PER ASTM B 545 WITH SUPPLEMENTAL ANTI-FRETTING LUBRICANT.
3. NICKEL PLATE.
4. GOLD PLATE
5. BLACK NICKEL PLATE.
6. TIN PLATE PER ASTM B 545 WITH SUPPLEMENTAL ANTI-FRETTING LUBRICANT.

THIS DRAWING IS A CONTROLLED DOCUMENT.

DIMENSIONS: mm [INCHES]

TOLERANCES UNLESS OTHERWISE SPECIFIED:
0 PLC ± -
1 PLC ± -
2 PLC ± 0.05 [.002]
3 PLC ± -
4 PLC ± -
ANGLES ± -

MATERIAL 1

FINISH SEE TABLE

DWN M. O'BRINE 29OCT99
CHK B. MOYER 29OCT99
APVD B. MOYER 29OCT99
PRODUCT SPEC —
APPLICATION SPEC —
WEIGHT —

Tyco Electronics
Tyco Electronics Corporation
Harrisburg, Pa 17105-3608

NAME FERRULE

SIZE	CAGE CODE	DRAWING NO	RESTRICTED TO
A3	00779	C-413889	—

CUSTOMER DRAWING

SCALE 10:1 SHEET 1 OF 1 REV G