THIS DRAWING IS UNPUBLISHED. RELEASED FOR PUBLICATION ,19 .
© COPYRIGHT 19 BY AMP INCORPORATED. ALL RIGHTS RESERVED.

LOC	DIST
AA	20

REVISIONS

P	LTR	DESCRIPTION	DATE	DWN	APVD
	B	REVISED; EC 0UFO-0130-01	28SEP01	DLD	EWB

1. MATERIAL: POLYETHYLENE MOLDING COMPOUND, NATURAL.

2. DIMENSIONS ARE MAXIMUM UNLESS OTHERWISE SPECIFIED.

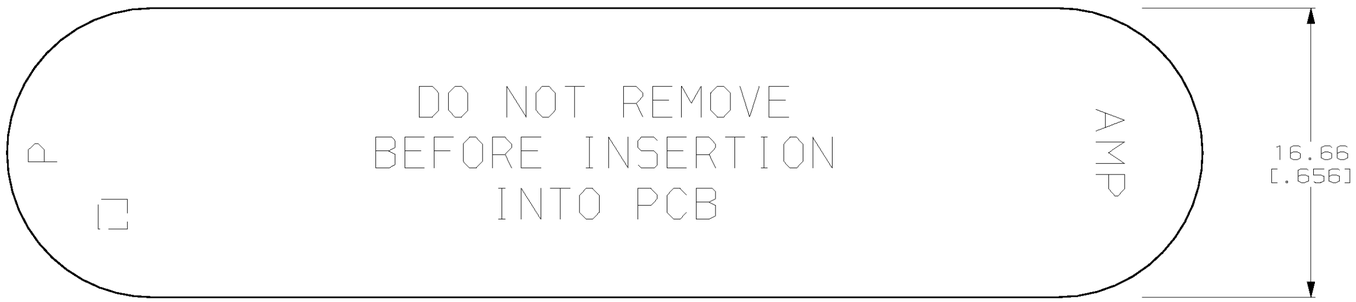

553442-4 SHOWN

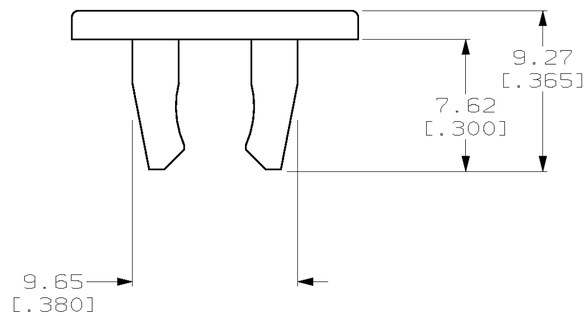

POSITION	DIM. B	DIM. A	PART NUMBER
64	84.07[3.310]	73.91[2.910]	553442-5
50	68.84[2.715]	58.67[2.310]	553442-4
36	53.59[2.110]	43.43[1.710]	553442-3
24	40.89[1.610]	30.73[1.210]	553442-2
14	29.72[1.170]	19.56[.770]	553442-1

THIS DRAWING IS A CONTROLLED DOCUMENT.

DIMENSIONS: mm[INCHES]

TOLERANCES UNLESS OTHERWISE SPECIFIED:
0 PLC ±-
1 PLC ±-
2 PLC ±-
3 PLC ±-
4 PLC ±-
ANGLES ±-

MATERIAL 1

FINISH –

DWN 26SEP2001 DL DRUMMOND
CHK 26SEP2001 DL DRUMMOND
APVD 28SEP2001 EW BEILES
PRODUCT SPEC –
APPLICATION SPEC –
WEIGHT –

AMP Incorporated
Harrisburg, PA 17105-3608

NAME
RETAINER PLUG,
ACTION PIN, CHAMP-LOK

SIZE	CAGE CODE	DRAWING NO	RESTRICTED TO
A2	00779	C-553442	–

CUSTOMER DRAWING | SCALE 4:1 | SHEET 1 OF 1 | REV B

553442

AMP 1471-9 REV 11JUN97