UTS SERIES

SOURIAU

Waterproof Plastic Connectors

IP68 and IP69K

Esterline
Connection Technologies

Contents

Overview

Typical Applications 06
Features & Benefits 07
Range Overview 08
Layouts 10
General Technical Characteristics 12

Connector

Overmoulded Cable Assembly 16
2 contacts 20
2 + ground contacts 28
3 contacts 36
3 + ground contacts 52
4 contacts 60
5 contacts 72
6 contacts 80
6 + ground contacts 92
7 contacts 96
8 contacts 100
10 contacts 112
12 contacts 116
14 contacts 128
15 contacts 132
18 contacts 136
19 contacts 140
23 contacts 144
32 contacts 148
LC (Fiber Optic) 152
MPO (Fiber Optic) 156

Contacts

Description 162
Contact Plating Selector Guide 163
Contact Selector Guide 164
Packaging 164
Crimp Contacts 165
#16 Coaxial Contacts 167
PCB Contacts 168
Fiber Optic Contacts 170

Technical Information

Tooling 174
Crimping Instructions 176
Handle & Interchangeable Heads 178
Extraction Tools 179
Overmoulded Cable Assembly Dimensions 179
Assembly Instructions 180
Mated Connector Lengths 184
Mating Procedure 185
Rated Current & Working Voltage 186
UV Resistance 187
UL94 + UL1977 188
IEC 61984 & IP Codes Explained 191
IEC 61140 Explained 193
What is NEMA Rating ? 194
Ethernet for the Layman 195

Appendices

#16 Coaxial Contacts/Cabling Notices 200
Glossary of Terms 201
Discrimination/Keying Methods 208
Part Number Index 209

UTS SERIES

© 2014 SOURIAU - SOURIAU is a registered trademark

UTS Series

Overview

Typical Applications 06

Features & Benefits 07

Range Overview 08

Layouts 10

General Technical Characteristics 12

Typical Applications

Energy - Power

Off-Road

Building Automation & Control

Instrumentation - Measurement

Rail

Stage - Light

Features & Benefits

WATER PROOF

IP68/69K Dynamic Mated & Unmated

Ideal for outdoor and indoor dynamic applications requiring continuous underwater immersion, routine pressure washing and dust protection.

UV RESISTANT

No Degradation Over Time

No mechanical deterioration or important variation in colour after 5 years of exposure in natural environment (equivalent exposure to sun and moisture as per ISO4892) and F1 rated per UL 746C.

UL/IEC COMPLIANT

Qualified & Certified

In accordance with:
- UL 1977 - Certificate ECBT2, File number: E169916
- CSA C22.2 n°182.3 - Certificat ECBT8, File number: E169916.

QUICK MATING

1/3 Bayonet Coupling

With only 1/3 twist of the bayonet coupling system, connectors are mated with audible "click" and tactile feel to confirm proper mating. This mating feature eliminates connection uncertainty and reduces time and labor during installation.

COST SAVINGS

Mixed Power & Signal Contacts

Power supply and signal transmission can be combined in a unique interconnect solution to reduce system complexity and minimize component installation cost.

Range

UTS Series

Cable Sealed

Single Wire Sealed

UTS Standard

Sealed: IP68/69K dynamic
UV resistant
UL/IEC compliant

Corrosion-proof
Plastic housing

UTS Backshells

Cable Sealing

Double Sealing (Wires + Cable)

Grommet

Single Wire Sealed

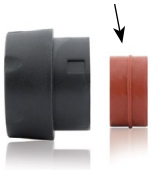

Flexible conduit adaptators

Contact us for more information

Contacts Supplied Separately

Choice of Crimp Contacts
- Machined
- Stamped and Formed
- Coaxial

PCB Contacts

Fiber Optic

Contacts Loaded Screw Termination

Contacts Loaded Handsolder

Plug

UTS Sealed Unmated

Sealed Unmated: IP68/69K dynamic
MIL-C-26482 compatible
UV resistant
UL/IEC compliant

Corrosion-proof
Plastic housing

Overmoulded Cable Assembly

Overview

UTS Standard Receptacle

Square Flange

Threaded Receptacle

Contacts Supplied Separately

Choice of Crimp Contacts
- Machined
- Stamped and Formed
- Coaxial

PCB Contacts

Fiber Optic

In-line

Jam Nut

Contacts Supplied Separately

Choice of Crimp Contacts
- Machined
- Stamped and Formed
- Coaxial

PCB Contacts

Fiber Optic

Contacts Loaded

Screw Termination

PCB

UTS Backshells

Cable Sealing

Double Sealing (Wires + Cable)

Grommet

Single Wire Sealed

Flexible conduit adaptators

Contact us for more information

UTS Sealed Unmated Receptacle

Jam Nut

Square Flange

Contacts Loaded

Handsolder

PCB

UTS PCB Contacts

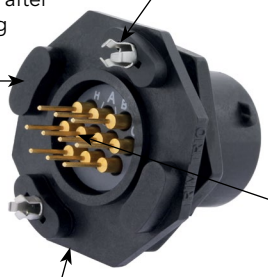

Stand-offs to allow cleaning after soldering

Metal hold down clips
- to lock the connector easily on the PCB and to release stress on solder joints
- suitable for soldering in a metallic hole

Pre-assembled PCB contacts
- machined or stamped versions available
- different solder tails lengths possible
- different plating options

Low profile housing to limit space between panel and PCB

Layouts (Electrical parameter according to IEC)

Shell Size	Contact #16 (Ø 1.6mm)	Contact #20 (Ø 1.0mm)	Contact #8 (Ø 3.6mm)	Hybrid & others
8		**8E2/8D2**[1] 7A 32V 2 contacts Page 20 **8E3/8D3**[1] 7A 32V 3 contacts Page 36 **8E3A/8D3A**[1] 7A 50V 3 contacts Page 40 **8E98/8D98**[1] 7A 50V 3 contacts Page 40 **8E33/8D33**[1] 7A 50V 3 contacts Page 44 **8E4/8D4**[1]* 7A 32V 4 contacts Page 60		
10	**103** 16A 300V 2+ground Page 28 **104**[3] 13A 150V 4 contacts 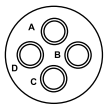 Page 68	**106*** **10E6**[1]**/10D6** 7A 32V 6 contacts 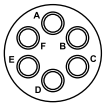 Page 84 **10E98/10D98** 7A 50V 6 contacts 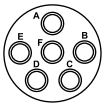 Page 88 **10E7**[1]**/10D7** 7A 50V 7 contacts 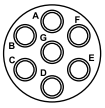 Page 96		**102W2** 25A 150V 4 contacts 2xØ2.4 (#12) 2xØ1.0 (#20) 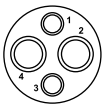 Page 64 **103W3** 5A 32V 6 contacts 3xØ1.6 (#16) 3xØ1.0 (#20) 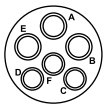 Page 80
12	**12E2/12D2** 16A 150V 2 contacts 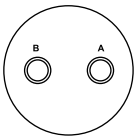 Page 24 **12E3/12D3** 16A 150V 3 contacts 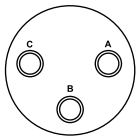 Page 48 **124** **12E4/12D4** 16A 300V 3+ground 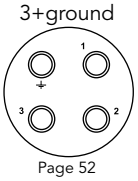 Page 52 **128**[1] [3] 10A 80V 8 contacts 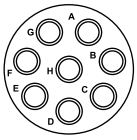 Page 100	**1210*** **12E10/12D10** 6A 50V 10 contacts 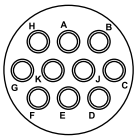 Page 112 **12E8/12D8** 6A 32V 8 contacts 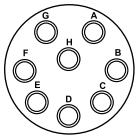 Page 104 **12E14/12D14** 5A 32V 14 contacts 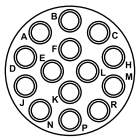 Page 128		

1: M12, M16 and M20 threaded receptacle available 2: NPT available 3: Discrete wire grommet option * Ethernet compatible: see pages 195 & 196

Shell Size	Contact #16 (Ø 1.6mm) Contacts #20: from AWG 26 to 18, 0.13 to 0.93 mm²	Contact #20 (Ø 1.0mm) Contacts #16: from AWG 30 to 14, 0.05 to 2.5 mm²	Contact #8 (Ø 3.6mm) Contacts #12: from AWG 22 to 12, 0.13 to 4 mm²	Mixed Power Contacts #8: from AWG 16 to 8, 1.5 to 10 mm²
14	**14E5/14D5** 16A 150V 5 contacts 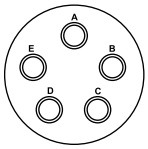 Page 72 **147**[3] **14E7/14D7** 16A 300V 6+ground 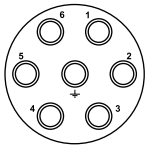 Page 92 **1412**[3] 10A 63V 12 contacts 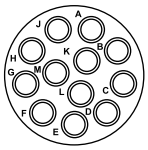 Page 116 **1492**[3] 10A 63V 12 contacts 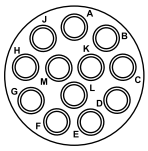 Page 124	**14E18/14D18** 5A 50V 18 contacts 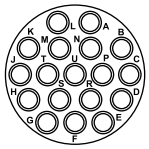 Page 136 **1419** **14E19/14D19** 5A 32V 19 contacts 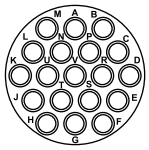 Page 140	**142G1**[2] 40A 300V 2+ground 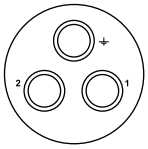 Page 32	**148** 17A 230V 8 contacts 4xØ1.6 (#16)+4xØ2.4 (#12) 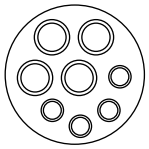 Page 108 **14E12/14D12** 4A 50V 12 contacts 4xØ1.6 (#16)+8xØ1.0 (#20) 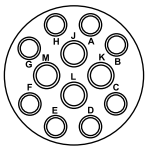 Page 120 **14E15/14D15** 4A 50V 15 contacts 1xØ1.6 (#16)+14xØ1.0 (#20) 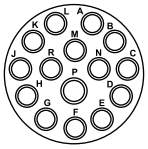 Page 132
18	**1823** 9A 63V 23 contacts 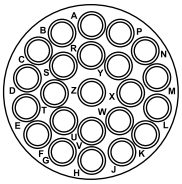 Page 144	**18E32/18D32** 4A 32V 32 contacts 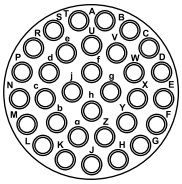 Page 148	**183G1**[2] 32A 300V 3+ground 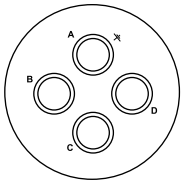 Page 56	**18X2M3**[2] 32A 300V 5 contacts 3xØ1.6 (#16)+2xØ3.6 (#8) 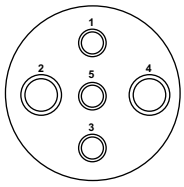 Page 76 **LC** 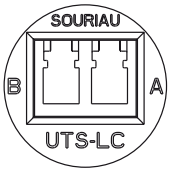 Page 152 **MPO** 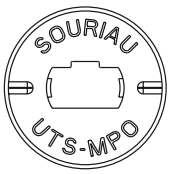 Page 156

XXXXXX blue highlighted items: UTS Sealed in Unmated Condition

General Technical Characteristics

Materials

- **Body connector + Backshell:** Thermoplastic
- **Insert:**
  - UTS Standard, UTS Single Wire Sealed, UTS Screw Termination Contacts: Thermoplastic
  - UTS Sealed Unmated Handsolder & UTS Sealed Unmated with PC Tails Contacts: Elastomer
- **Nut:** Metal
- **Contacts:** See page 161
- **Halogen free**
- **RoHS compliant & conforms to the Chinese standard SJ/T1166-2006 (Chinese RoHS equivalent)**

Environmental

- **Operating temperature:**
  from -40°C to +105°C
  40/100/21 per NFF 61-030
- **Flammability rating:**
  - UL94 V-0 (all UTS except the Sealed Unmated version) see page 180
  - UL94 HB (UTS Sealed Unmated version only) see page 180
  - I2F3 according to NFF 16101 & NFF 16102
- **Salt spray:**
  per EIA-026A ≥500 hours
- **UV resistant:**
  No mechanical degradation or important variation of colour after 5 years of exposure in natural environment (equivalence exposure to sun and moisture as per ISO 4892) and F1 rated per UL 746C
- **Sealing:**
  - UTS Standard: IP68/IP69K dynamic (mated)
  - UTS Sealed Unmated version: IP68/IP69K dynamic (unmated)
  - UTS Single Wire Sealed: IP67/69K (up to IP68 with double sealing backshell)
  - UTS Screw Termination Contacts: IP68/IP69K dynamic (mated)

  Note: IP68=10 m underwater during 1 week
- **Fluid resistance:**
  - Gas and Oil
  - Mineral oil
  - Acid bath
  - Basic bath

Electrical

- **In accordance with:**
  - UL 1977: Certificat ECBT2
    File number: E169916
  - CSA C22.2 n°182.3: Certificat ECBT8
    File number: E169916
- Also see pages 10 & 11

Mechanical

- **Durability:**
  250 matings & unmatings per MIL-C-26482
- **Vibration resistance (all UTS versions except UTS Screw Termination contacts):**
  Sinusoidal vibrations per IEC 60512-4 - from 10 to 2000 Hz
- **Thermal shock:**
  5 cycles 30 min. from -40°C to 105°C per MIL-STD-1344 method 1003

UTS SERIES

© 2014 SOURIAU - SOURIAU is a registered trademark

Connector

Overmoulded Cable Assembly 16

2 contacts
- 8E2/8D2: 7A 32V 20
- 12E2/12D2: 16A 150V 24

2 contacts + ground
- 103: 16A 300V 28
- 142G1: 40A 300V 32

3 contacts
- 8E3/8D3: 7A 32V 36
- 8E3A/8E98 - 8D3A/8D98: 7A 50V 40
- 8E33/8D33: 7A 50V 44
- 12E3/12D3: 16A 150V 48

3 contacts + ground
- 124 - 12E4/12D4: 16A 300V 52
- 183G1: 32A 300V 56

4 contacts
- 8E4/8D4*: 7A 32V 60
- 102W2: 25A 150V 64
- 104: 13A 150V 68

5 contacts
- 14E5/14D5: 16A 150V 72
- 18X2M3: 32A 300V 76

6 contacts
- 103W3: 5A 32V 80
- 106* - 10E6/10D6: 7A 32V 84
- 10E98/10D98: 7A 50V 88

6 contacts + ground
- 147 - 14E7/14D7: 16A 300V 92

7 contacts
- 10E7/10D7: 7A 50V 96

8 contacts
- 128: 10A 80V 100
- 12E8/12D8: 6A 32V 104
- 148: 17A 230V 108

10 contacts
- 1210* - 12E10/12D10: 6A 50V 112

12 contacts
- 1412: 10A 63V 116
- 14E12/14D12: 4A 50V 120
- 1492: 10A 63V 124

14 contacts
- 12E14/12D14: 5A 32V 128

15 contacts
- 14E15/14D15: 4A 50V 132

18 contacts
- 14E18/14D18: 5A 50V 136

19 contacts
- 1419 - 14E19/14D19: 5A 32V 140

23 contacts
- 1823: 9A 63V 144

32 contacts
- 1832 - 18E32: 4A 32V 148

LC 152

MPO 156

Electrical parameters according to IEC

* Ethernet compatible see pages 195 & 196

Overmoulded Cable Assembly

SOURIAU has provided connectors in various applications for more than 90 years and used in the most extreme environments. Conscious about the difficulty to finding a quick and a reliable harness manufacturer, we began in-house cable assembly production. It allows customers to reduce the number of suppliers, and to take advantage of the "best in class" quality of the SOURIAU group. Overmoulding is a process that further enhances the sealing properties of the UTS range, especially over many years of use. Overmoulding provides the opportunity to change the cable exit from straight to 90 degrees and avoid stress on the cable terminated to the connector. Also, as the wires are encapsulated inside the molding, a barrier is created which prevents any liquid from entering the equipment through the connector if the cable jacket is breached.

How to choose the outer jacket material

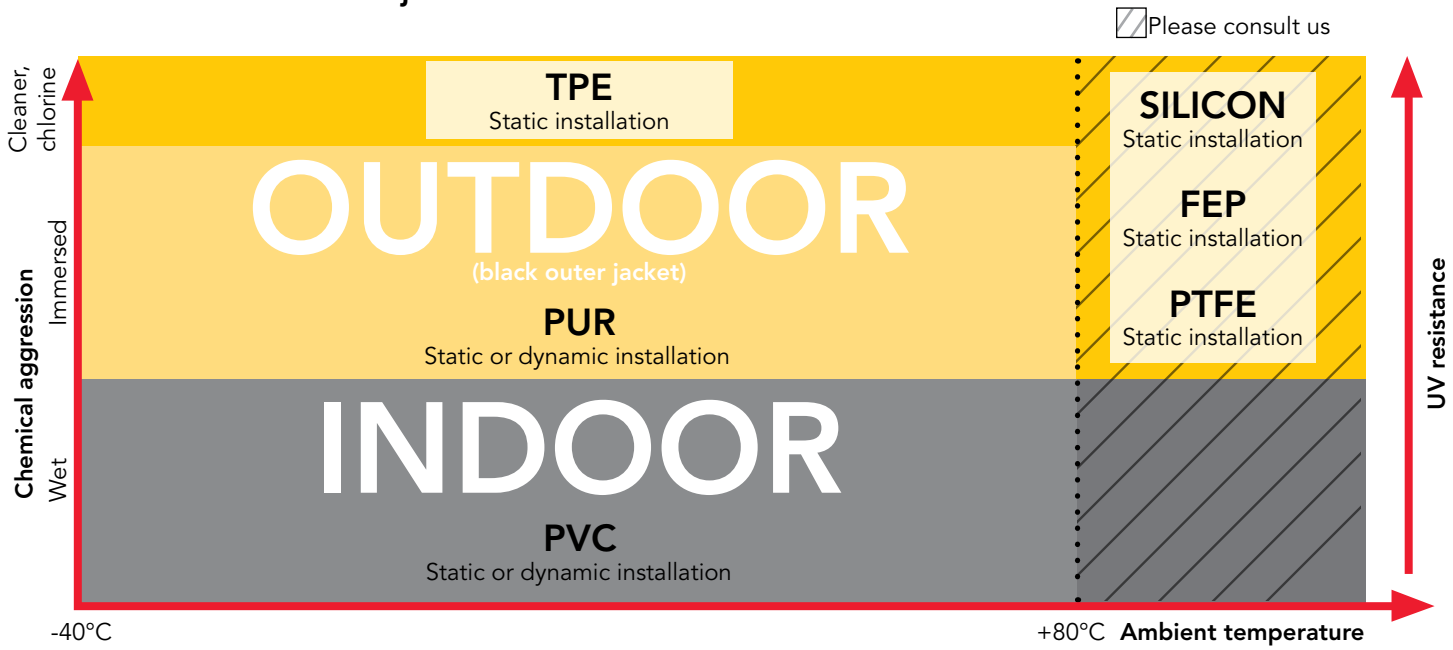

Overmoulding Description

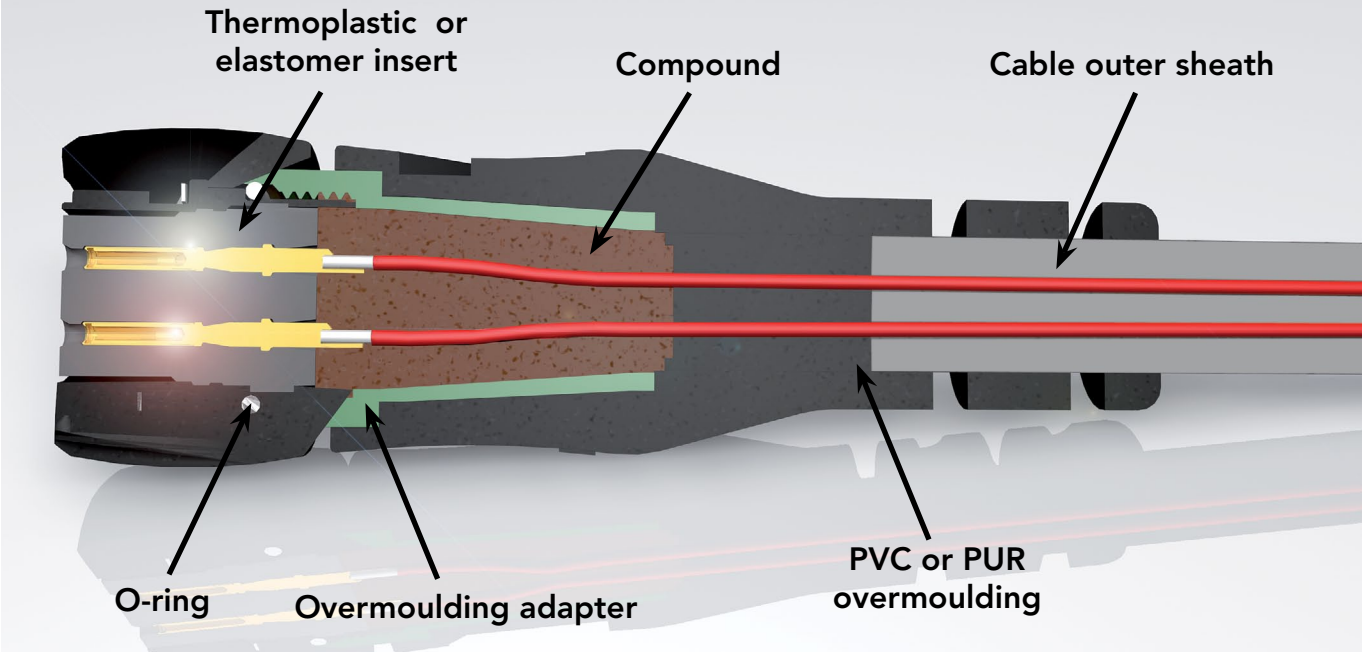

Connector with cable gland backshell

GOOD

...water ingress unhampered, leading to damage.

Overmoulded connector

BEST

...prevents water ingress via capillary action.

UTS Waterproof Plastic Overmould

HAUTS Standard Offering Description

Cable

- PVC outer sheath (grey color)
- Wire section 1.5 mm² for #16 contact
- Wire section 0.5 mm² for #20 contact
- 300V
- Unshielded
- Flammability rating IEC (UL1581 Sec.1160)
- Operating temperature: -40°C +70°C

Overmoulding Specifications

PLATING	SALT SPRAY	TEMPERATURE*	WATERPROOF*	MECHANICAL
No plating	500 H	-40°C up to + 105°C	IP68/IP69K dynamic (mated)	250 matings/unmatings

* With appropriate cable and overmoulding

Example of Customized Cable Assemblies

Overmoulding on Curly Cable

Overmoulding with Double Ends

Harness for PCB Connection

To define your customized cable assembly, please consult our technical services.

Cable Information

Range of temperature: Occasional flexing: -5°C up to +70°C
Fixed installation: -40°C up to +80°C

Rated voltage: U0/U: 300/500V

Wire section : Layouts with #16 contact: wire section 1.5 mm²
Layouts with #20 contact: wire section 0.5 mm²

Harmonized reference: H05 VV - F XX

Standardisation of European Cable - DIN VDE 0281/DIN VDE 0282/DIN VDE 0292

Harmonized wire coding system

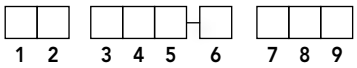

1. Basic type	2. Working voltage	3. Insulating	4. Sheath-cladding material	5. Special features	6. Conductor types	7. Number of conductors	8. Protective conductor	9. Conductor cross-sectional
H: Harmonized Type	03: 300/300V	V: PVC	V: PVC	H: Ribbon cable, separable	U: Single wire		X: Without protective conductor	Area specified in mm²
A: National Type	05: 300/500V	R: Rubber	R: Rubber	H2: Ribbon cable non-separable	R: Multi-wire		G: With protective conductor	
	07: 450/750V	S: Silicone Rubber	N: Cloroprene Rubber		K: Fine wire (permanently installed)			
			J: Glass-filament braiding		F: Fine wire (flexible)			
			T: Textile braiding		H: Super fine wire			
					Y: Tinsel strand			

Example: Harmonized type, 300/500V, PVC insulating, PVC sheath- cladding, Fine wire, 3x1.5 cross-sectional: H05VVF3x1.5

8E2/8D2 (Shell size 8, 2x#20)

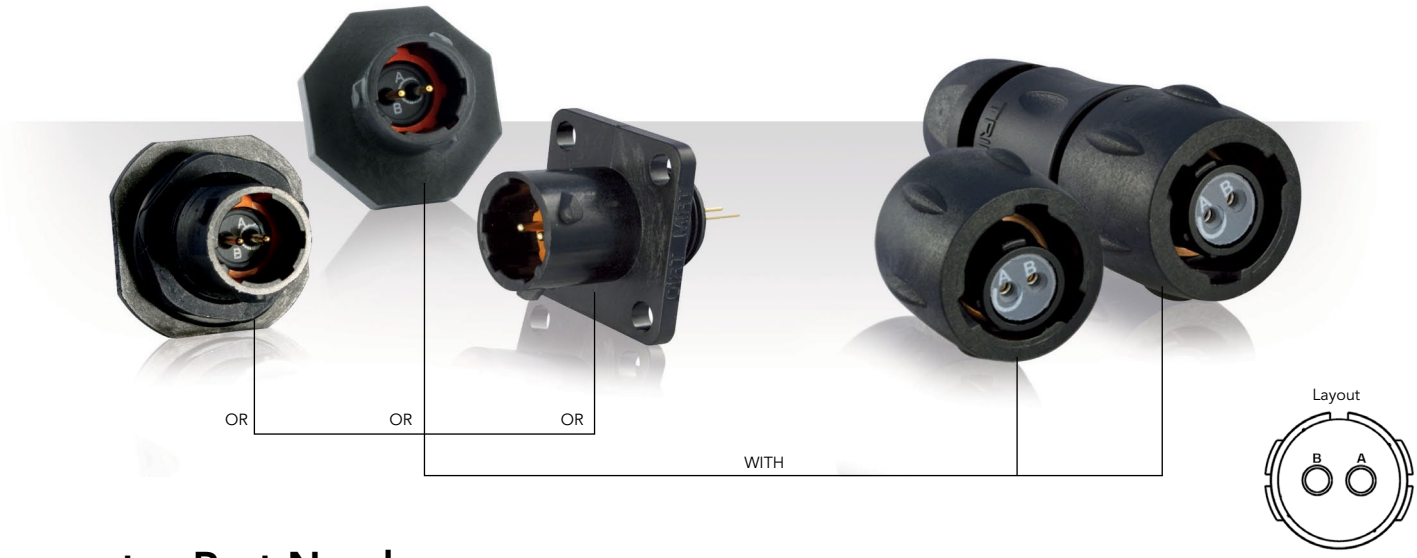

Connector Part Numbers

Contact type	Connector type	Backshell	Part number	
			Male insert	Female insert
Handsolder electrical contacts loaded see page 23	Square flange receptacle	Without (Fig.1)	UTS08E2P	UTS08E2S
	Plug	Without (Fig.7)	UTS68E2P	UTS68E2S
		Cable gland (Fig.8)	UTS6JC8E2P	UTS6JC8E2S
	Jam nut receptacle	Without (Fig.4)	UTS78E2P	UTS78E2S
	M12 threaded receptacle	Without (Fig.3)	UTS78E2PM12	UTS78E2SM12
PCB contacts loaded see page 23	Square flange receptacle	Without (Fig.2)	UTS08D2P	UTS08D2S
	Jam nut receptacle with stand off and with hold down clips	Without (Fig.6)	UTS78D2P32	UTS78D2S32
	Jam nut receptacle with stand off and without hold down clip	Without (Fig.5)	UTS78D2P	UTS78D2S
	M12 threaded receptacle	Without (Fig.3)	UTS78D2PM12	UTS78D2SM12

Possibilities of discrimination/keying methods see page 208

Sealed unmated

Overmoulded Cable Assembly Part Numbers

Overmoulding type	Connector type	Wire size (mm²)	Harmonized cable part number (1)	Part number (length: 1m.)*	
				Male plug	Female plug
Straight ending	Plug	0.5	H05 VV - F 2x0.5	HAUTS0V8E2PST100	HAUTS0V8E2SST100
Right angle ending	Plug	0.5	H05 VV - F 2x0.5	HAUTS0V8E2PRA100	HAUTS0V8E2SRA100

(1) Other cable available on demand

* Other lengths available on demand

8E2/8D2 (Shell size 8, 2x#20)

Dimensions

Square Flange Receptacle - UTS0

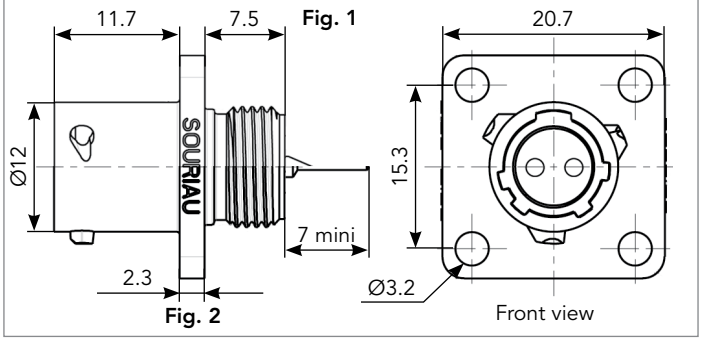

M12 Threaded Receptacle - UTS7

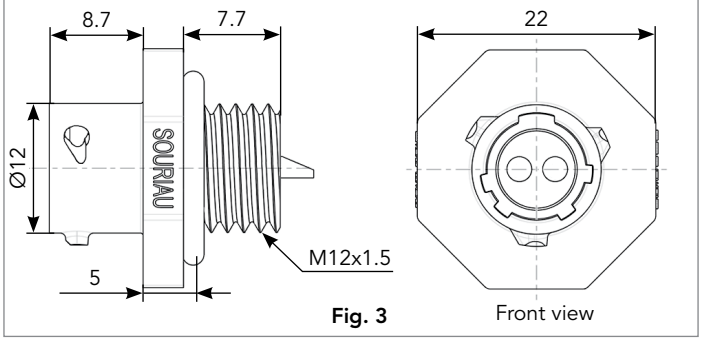

Jam Nut Receptacle - UTS7

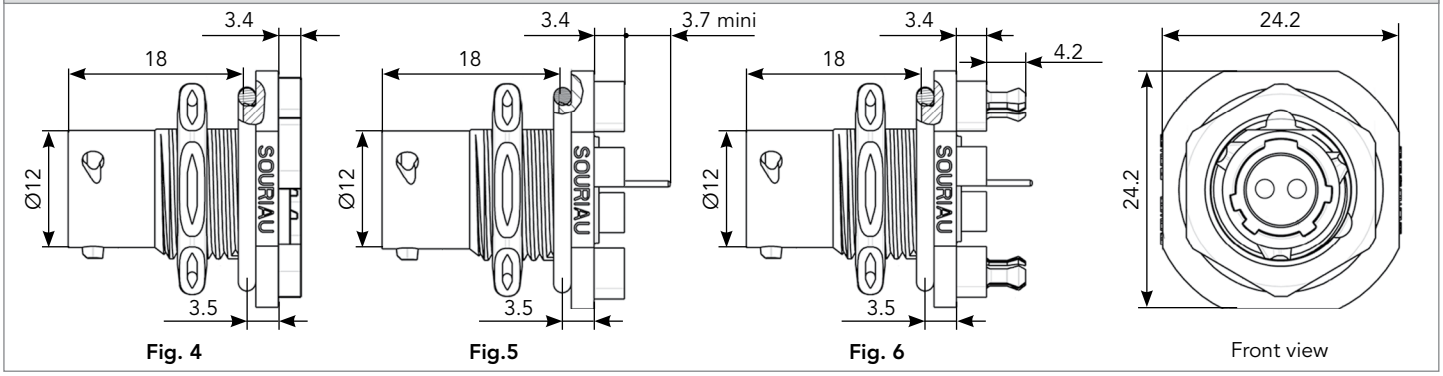

Plug - UTS6

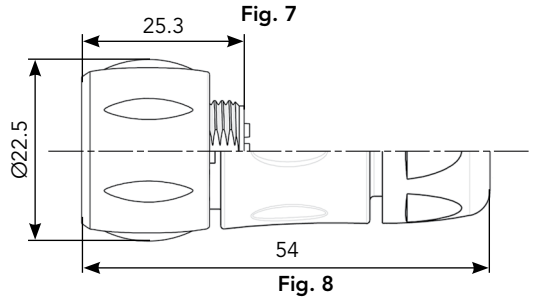

Mated Connector Lengths

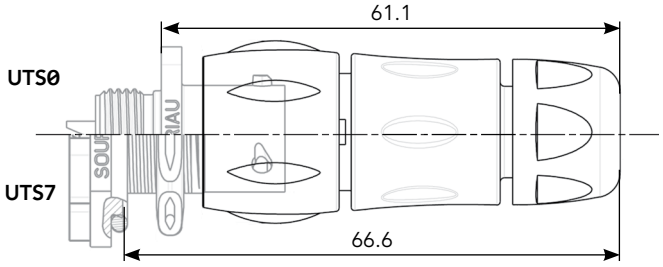

Panel Cut Out

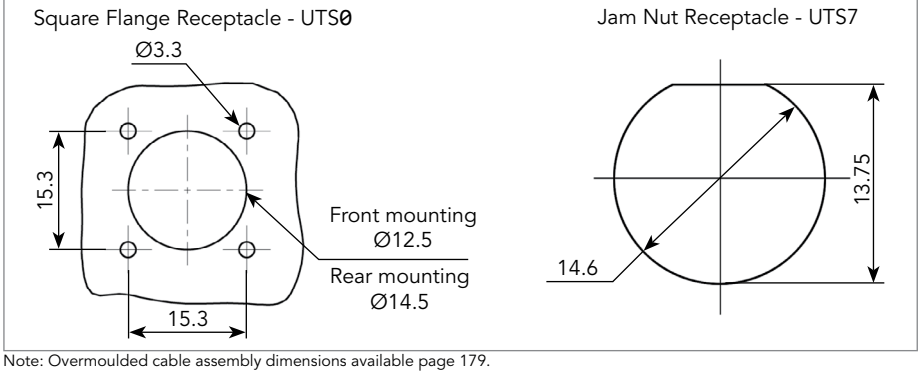

Drilling Pattern

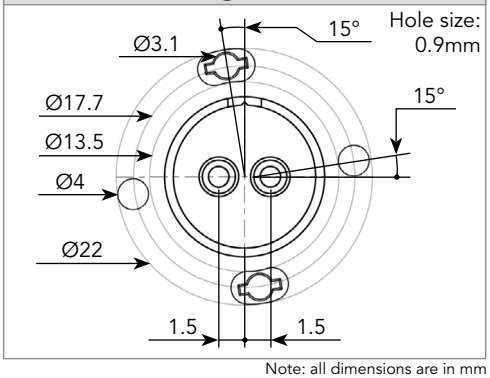

Note: Overmoulded cable assembly dimensions available page 179.

Note: all dimensions are in mm

8E2/8D2 (Shell size 8, 2x#20)

Accessories

Jam Nut Sealing Caps

IP68/69K

Part number
UTS8DCG

IP68/69K Metal terminal

Part number
UTS8DCGR

Square Flange Sealing Cap

IP68/69K Metal terminal

Part number
UTS8DCGE

Plug Protective Cap

IP40

Part number
UTS68C

Plastic Protective Cap

Part numbers	
Receptacle cap	Plug cap
85005585A	85005594

Gasket

Part numbers
UTFD11B

Color Coding Rings

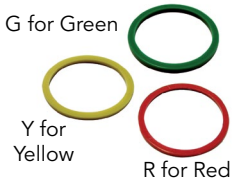

Part numbers	
Receptacles	Plugs
UTS78CCRR	UTS68CCRR
UTS78CCRY	UTS68CCRY
UTS78CCRG	UTS68CCRG

8E2/8D2 (Shell size 8, 2x#20)

Contacts

#20	Contact type	Plating	Cable acceptance (AWG)	Wire stripping length
Handsolder	Loaded in the connector	Min 0.4µ gold over 0.8µ Ni	22 to 18	5 mm
PCB	Machined (1)	Min 0.4µ gold over 0.8µ Ni	-	-

(1): For dimensions see page 169

Electrical Characteristics

UL
7A 250V UL94 HB

CSA
7A 250V UL94 HB

IEC
7A 32V 1.5kV 3

UTS 8E2/8D2 Derating Curves

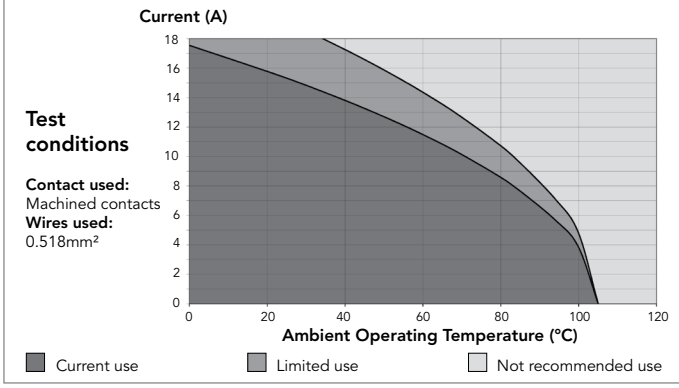

12E2/12D2 (Shell size 12, 2x#16)

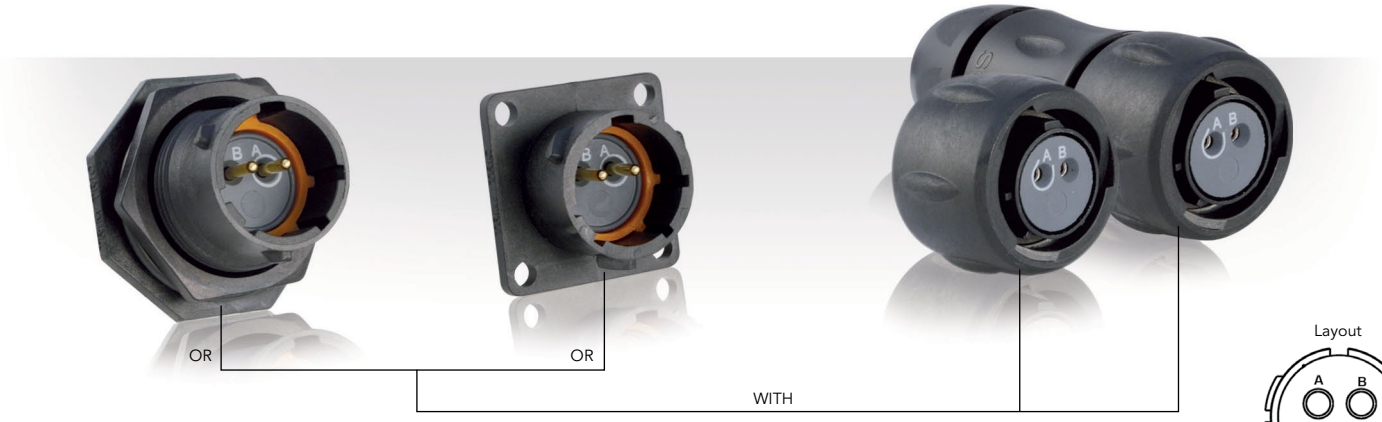

Layout

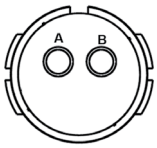

Connector Part Numbers

Contact type	Connector type	Backshell	Part number	
			Male insert	Female insert
Handsolder electrical contacts loaded see page 27	Square flange receptacle	Without (Fig.1)	UTS012E2P	UTS012E2S
	Plug	Without (Fig.6)	UTS612E2P	UTS612E2S
		Cable gland (Fig.7)	UTS6JC12E2P	UTS6JC12E2S
	Jam nut receptacle	Without (Fig.3)	UTS712E2P	UTS712E2S
PCB contacts loaded see page 27	Square flange receptacle	Without (Fig.2)	UTS012D2P	UTS012D2S
	Jam nut receptacle with stand off and with hold down clips	Without (Fig.5)	UTS712D2P32	UTS712D2S32
	Jam nut receptacle with stand off and without hold down clip	Without (Fig.4)	UTS712D2P	UTS712D2S

Sealed unmated

Overmoulded Cable Assembly Part Numbers

Overmoulding type	Connector type	Wire size (mm²)	Harmonized cable part number (1)	Part number (length: 1m.)*	
				Male plug	Female plug
Straight ending	Plug	1.5	H05 VV - F 2x1.5	HAUTS0V12E2PST100	HAUTS0V12E2SST100
Right angle ending	Plug	1.5	H05 VV - F 2x1.5	HAUTS0V12E2PRA100	HAUTS0V12E2SRA100

(1) Other cable available on demand

* Other lengths available on demand

12E2/12D2 (Shell size 12, 2x#16)

Dimensions

Square Flange Receptacle - UTS0

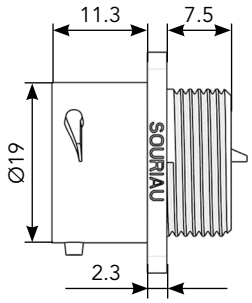

Fig. 1

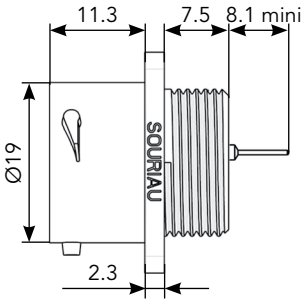

Fig. 2

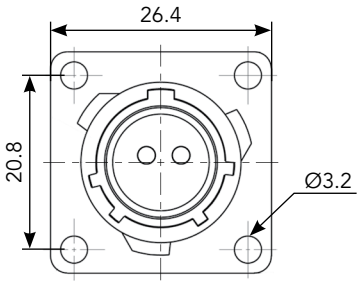

Front view

Jam Nut Receptacle - UTS7

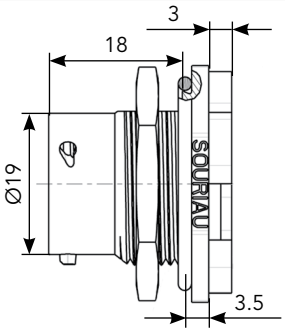

Fig. 3

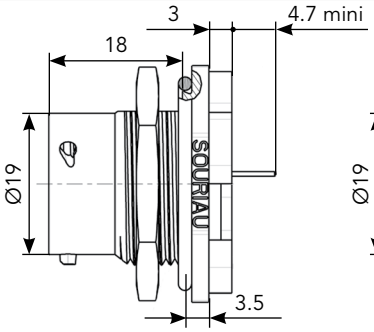

Fig. 4

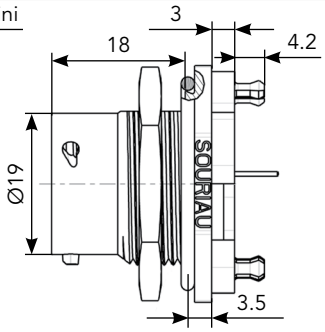

Fig. 5

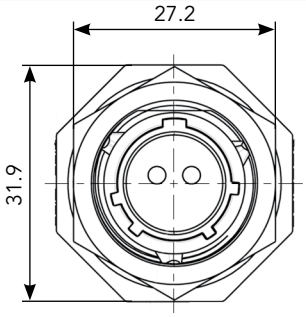

Front view

Plug - UTS6

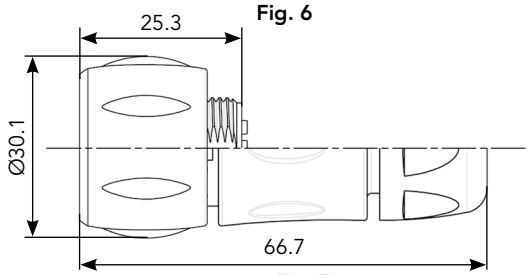

Fig. 6

Fig. 7

Mated Connector Lengths

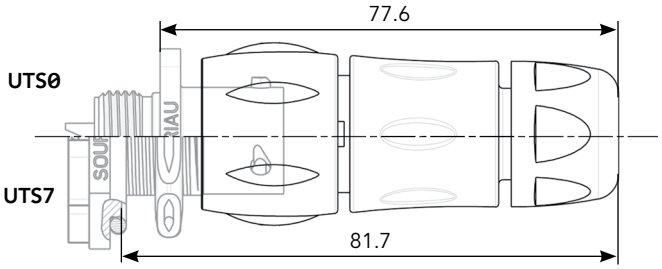

Panel Cut Out

Square Flange Receptacle - UTS0

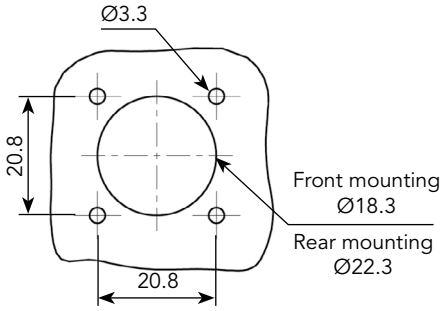

Jam Nut Receptacle - UTS7

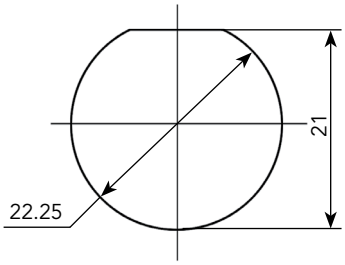

Drilling Pattern

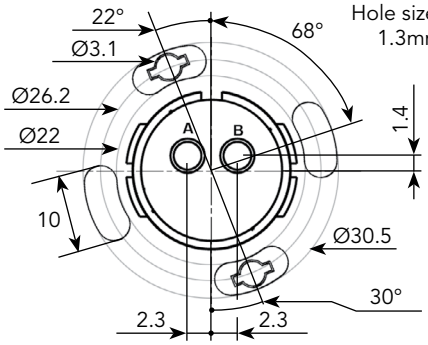

Note: Overmoulded cable assembly dimensions available page 179.

Note: all dimensions are in mm

12E2/12D2 (Shell size 12, 2x#16)

Accessories

Jam Nut Sealing Caps

IP68/69K

Part number
UTS12DCG

IP68/69K Metal terminal

Part number
UTS12DCGR

Square Flange Sealing Cap

IP68/69K Metal terminal

Part number
UTS12DCGE

Plug Sealing Cap

IP68/69K

Part number
UTS612DCG

Plastic Protective Cap

Part numbers	
Receptacle cap	Plug cap
85005587A	85005596

Gasket

Part numbers
UTFD13B

Color Coding Rings

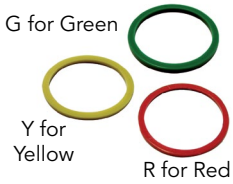

Part numbers	
Receptacles	Plugs
UTS712CCRR	UTS612CCRR
UTS712CCRY	UTS612CCRY
UTS712CCRG	UTS612CCRG

12E2/12D2 (Shell size 12, 2x#16)

Contacts

#16	Contact type	Plating	Cable acceptance (AWG)	Wire stripping length
Handsolder	Loaded in the connector	Min 0.4µ gold over 0.8µ Ni	18 to 14	5 mm
PCB	Machined (1)	Min 0.4µ gold over 0.8µ Ni	-	-

(1): For dimensions see page 169

Electrical Characteristics

UL
13A 600V UL94 HB

CSA
13A 600V UL94 HB

IEC
16A 150V 2.5kV 3

UTS 12E2/12D2 Derating Curves

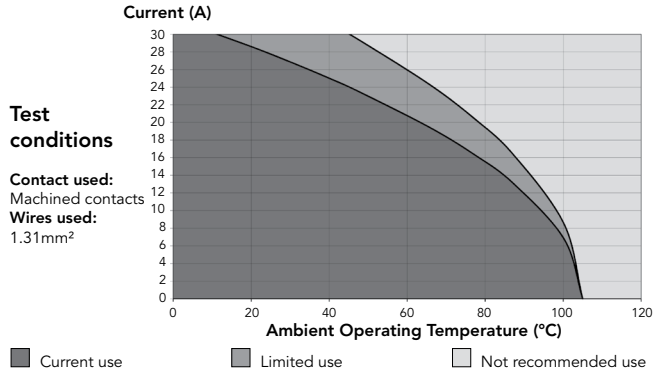

103 (Shell size 10, 2 + ground, 3x#16)

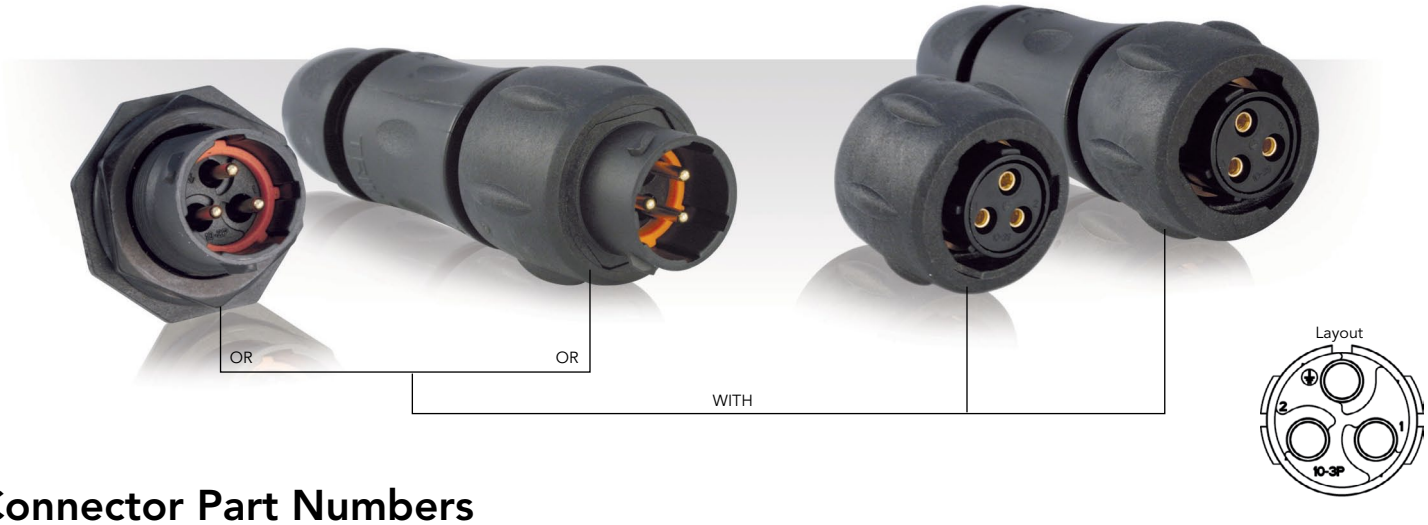

Connector Part Numbers

Contact type	Connector type	Backshell	Part number	
			Male insert	Female insert
Crimp contacts supplied separately see page 31	Free hanging receptacle	Cable gland (Fig. 1)	**UTS1JC103P**	**UTS1JC103S**
	Plug	Without (Fig. 2)	**UTS6103P**	**UTS6103S**
		Cable gland (Fig. 3)	**UTS6JC103P**	**UTS6JC103S**
	Jam nut receptacle	Without (Fig. 4)	**UTS7103P**	**UTS7103S**
PCB contacts supplied separately see page 31	Jam nut receptacle	Without (Fig. 4)	**UTS7103P**	**UTS7103S**

Overmoulded Cable Assembly Part Numbers

Overmoulding type	Connector type	Wire size (mm^2)	Harmonized cable part number (1)	Part number (length: 1m.)*	
				Male plug	Female plug
Straight ending	Plug	1.5	H05 VV - F 3x1.5	**HAUTS0V103PST100**	**HAUTS0V103SST100**
Right angle ending	Plug	1.5	H05 VV - F 3x1.5	**HAUTS0V103PRA100**	**HAUTS0V103SRA100**

(1) Other cable available on demand

* Other lengths available on demand

103 (Shell size 10, 2 + ground, 3x#16)

Dimensions

Free Hanging - UTS1

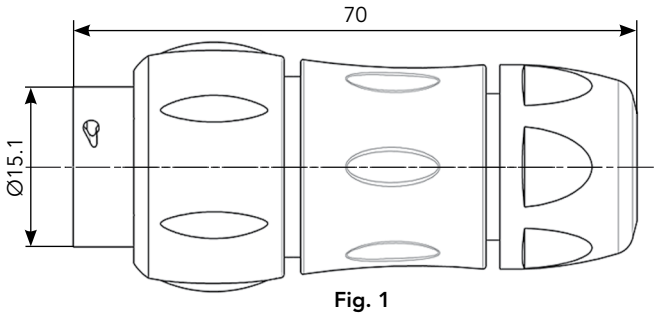

Fig. 1

Plug - UTS6

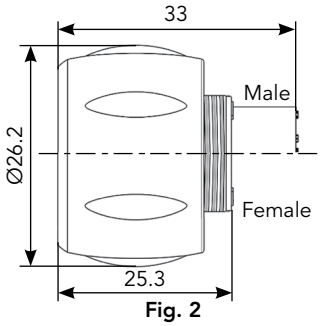

Fig. 2

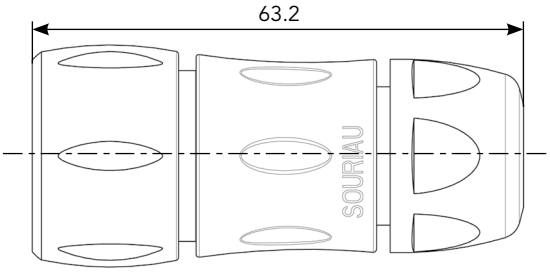

Fig. 3

Jam Nut Receptacle - UTS7

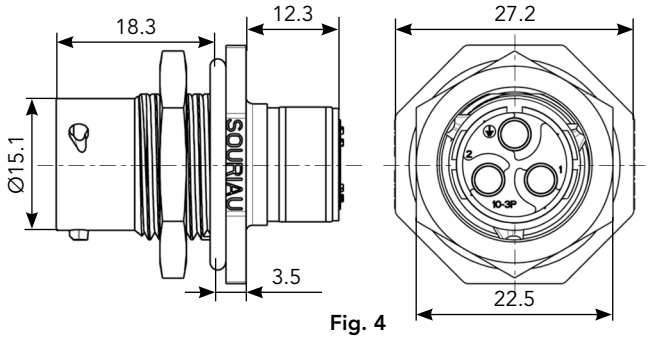

Fig. 4

Mated Connector Length - UTS7

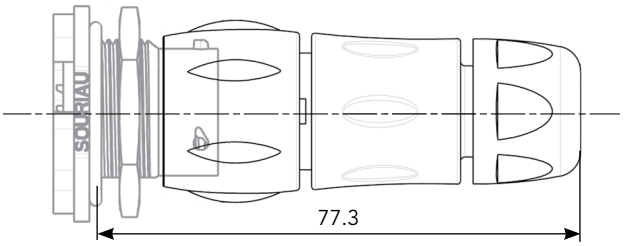

Panel Cut Out

Jam Nut Receptacle - UTS7

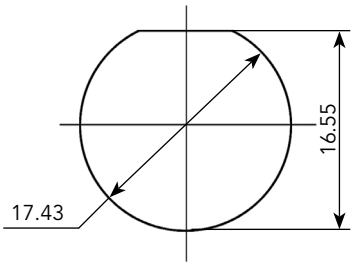

Drilling Pattern

Hole size:
1.3mm

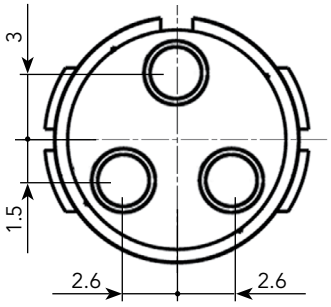

Note: Overmoulded cable assembly dimensions available page 179.

Note: all dimensions are in mm

103 (Shell size 10, 2 + ground, 3x#16)

Accessories and Tooling

Jam Nut Sealing Caps

IP68/69K

Part number
UTS10DCG

IP68/69K Metal terminal

Part number
UTS10DCGR

Handle (without Head)

Part number
SHANDLES

Tool Kit

Part number
TOOLKIT

Plug Sealing Cap

IP68/69K

Part number
UTS610DCG

Extraction Tool #16

Part number
RX2025GE1

Plastic Protective Cap

Part numbers	
Receptacle cap	Plug cap
85005586A	85005595

Color Coding Rings

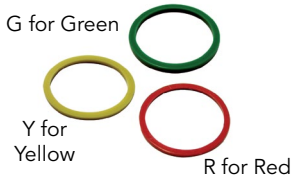

Part numbers	
Receptacles	Plugs
UTS710CCRR	UTS610CCRR
UTS710CCRY	UTS610CCRY
UTS710CCRG	UTS610CCRG

Crimp Tooling (without Shandles)

Contacts	Contact size	Part number of head
RM/RC 28M1K(1)	Standard contacts #16 Ø 1.6mm	S16RCM20*
RM/RC 24M9K(1)		S16RCM20*
RM/RC 20M13K(1)		S16RCM20*
RM/RC 20M12K(1)		S16RCM20*
RM/RC 16M23K(1)		S16RCM16*
RM/RC 14M30K(1)		S16RCM14*
SM/SC 24ML1TK6(1)		S16SCM20*
SM/SC 20ML1TK6(1)		S16SCM20*
SM/SC 16ML1TK6(1)		S16SCML1*
SM/SC 14ML1TK6(1)		S16SCML1*
SM/SC 16ML11TK6(1)		S16SCML11*
RMDXK10D28K	Coaxial contacts	M10S1J with die set & stop bushing see page 200 to 204
RCDXK1D28K		
RM/RC DX60xxD28K		
RM/RC DXK10D28 + york090		
RM/RC DX60xxD28		

(1): Example of plating, for other plating options see page 164
* Heads to be used with handle PN: SHANDLES

Handle Head Complete set

103 (Shell size 10, 2 + ground, 3x#16)

Contacts

#16	Contact type	AWG	Part number		Max wire Ø	Max insulator Ø
			Male	Female		
Crimp	Machined	30-28	RM28M1K(1)	RC28M1K(1)	0.55	1.00
		26-24	RM24M9K(1)	RC24M9K(1)	0.80	1.60
		22-20	RM20M13K(1)	RC20M13K(1)	1.15	1.80
		22-20	RM20M12K(1)	RC20M12K(1)	1.15	2.20
		20-16	RM16M23K(1)	RC16M23K(1)	1.80	3.20
		16-14	RM14M30K(1)	RC14M30K(1)	2.30	3.20
	Stamped & Formed reeled contacts See note (2) for loose piece	26-24	SM24M1TK6(1)(2)	SC24M1TK6(1)(2)	-	0.90-1.60
		22-20	SM20M1TK6(1)(2)	SC20M1TK6(1)(2)	-	1.20-2.10
		18-16	SM16M1TK6(1)(2)	SC16M1TK6(1)(2)	-	3.20
		18-16	SM16M11TK6(1)(2)	SC16M11TK6(1)(2)	-	3.00
		14	SM14M1TK6(1)(2)	SC14M1TK6(1)(2)	-	3.20
PCB	Machined (3)	-	RM20M12E83K(1)	RC20M12E84K(1)	-	-
Coaxial	Cable Multipiece	see pages 167, 200 to 206	RMDXK10D28	RCDXK1D28	-	-
	Cable Monocrimp		RMDX60xxD28	RCDX60xxD28	-	-
	Twisted pair Multipiece		RMDXK10D28 + york090	RCDXK1D28 + york090	-	-
	Twisted pair Monocrimp		RMDX60xxD28	RCDX60xxD28	-	-
Fiber optic	POF contacts (Plastic Optical Fiber)	-	RMPOF1000	RCPOF1000B	-	-

(1): Example of plating, for other plating see page 164 (2): Loose piece contact available if putting L. Example: SM20ML1TK6 (3): For dimensions see page 168 Note: all dimensions are in mm

Electrical Characteristics

UL
10A 500V UL94 V-0

CSA
7A 500V UL94 V-0

IEC
16A 300V 4kV 3
Temperature elevation: 50°C

UTS 103 Derating Curves

Test conditions

Contact used:
Machined contacts
Wires used:
1.31mm²

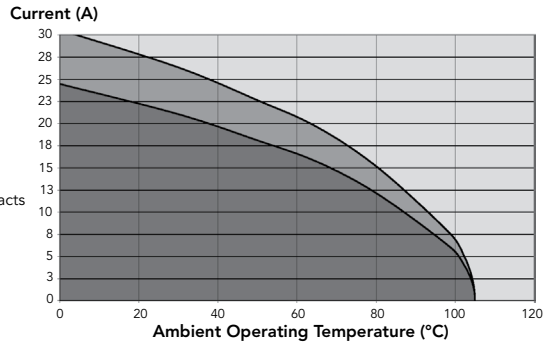

Current use | Limited use | Not recommended use

142G1 (Shell size 14, 2 + ground, 3x#8)

Connector Part Numbers

Contact type	Connector type	Backshell	Part number	
			Male insert	Female insert
Crimp contacts supplied separately see page 35	Square flange receptacle	Without (Fig. 1)	UTS0142G1P	-
	Free hanging receptacle	Cable gland (Fig. 6)	UTS1JC142G1P	UTS1JC142G1S
	Plug	Without (Fig. 3)	UTS6142G1P	UTS6142G1S
		Cable gland (Fig. 4)	UTS6JC142G1P	UTS6JC142G1S
	Jam nut receptacle	Without (Fig. 2)	UTS7142G1P	UTS7142G1S
	NPT threaded receptacle	Without (Fig. 5)	-	UTS7142G1SNPT
PCB contacts supplied separately see page 35	Square flange receptacle	Without (Fig. 1)	UTS0142G1P	-
	Jam nut receptacle	Without (Fig. 2)	UTS7142G1P	UTS7142G1S
	NPT threaded receptacle	Without (Fig. 5)	-	UTS7142G1SNPT
	NPT threaded receptacle with nut	Without (Fig. 5)	-	UTS7142G1SNPTNUT

Overmoulded Cable Assembly Part Numbers

Overmoulding type	Connector type	Wire size (mm²)	Harmonized cable part number (1)	Part number (length: 1m.)*	
				Male plug	Female plug
Straight ending	Plug	0.5	H05 VV - F 3x0.5	HAUTS0V142G1PST100	HAUTS0V142G1SST100
Right angle ending	Plug	0.5	H05 VV - F 3x0.5	HAUTS0V142G1PRA100	HAUTS0V142G1SRA100

(1) Other cable available on demand

* Other lengths available on demand

142G1 (Shell size 14, 2 + ground, 3x#8)

Dimensions

Square Flange Receptacle - UTS0

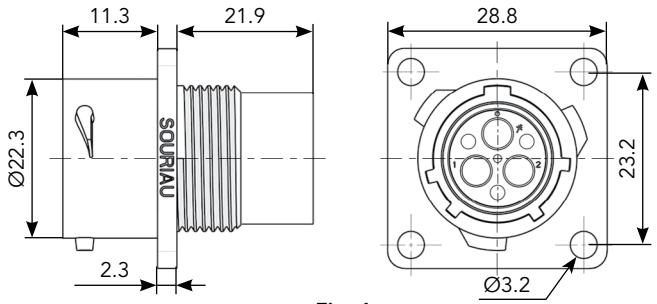

Fig. 1 Fig. 1

Jam Nut Receptacle - UTS7

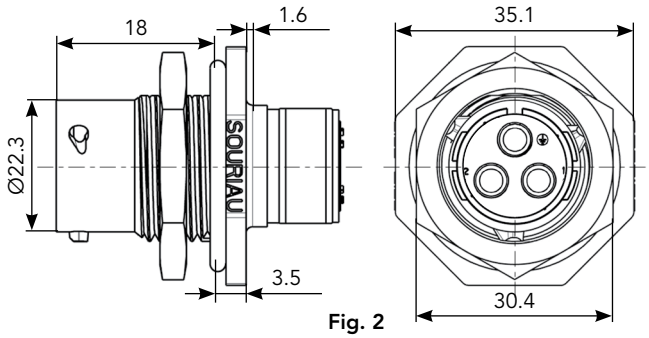

Fig. 2

Plug - UTS6

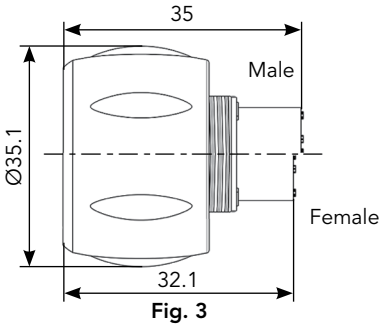

Fig. 3

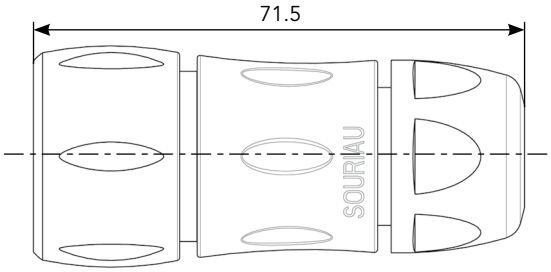

Fig. 4

NPT Threaded Receptacle - UTS7

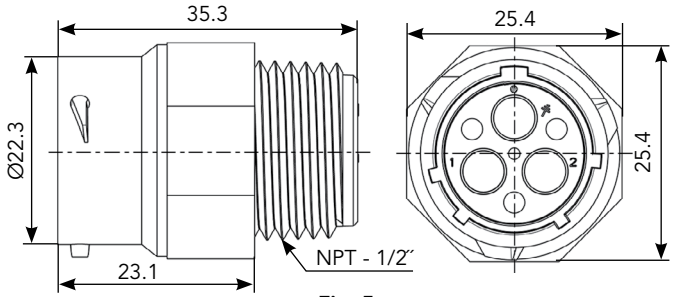

Fig. 5

Free Hanging - UTS1

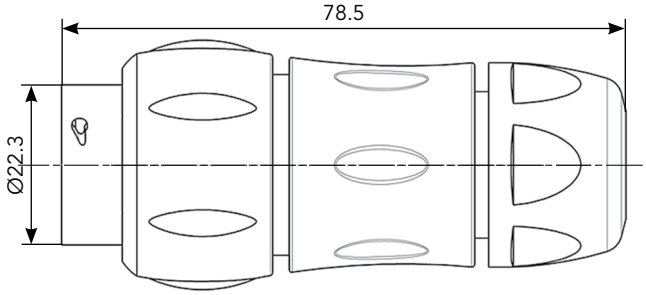

Fig. 6

Panel Cut Out

Jam Nut Receptacle - UTS7

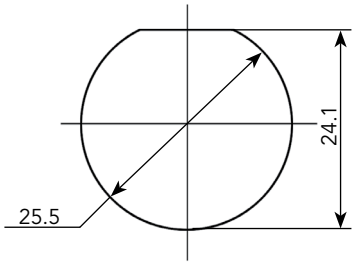

NPT

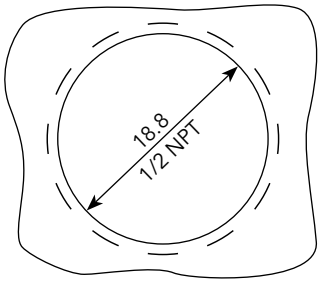

Drilling Pattern

Hole size: 3.3mm

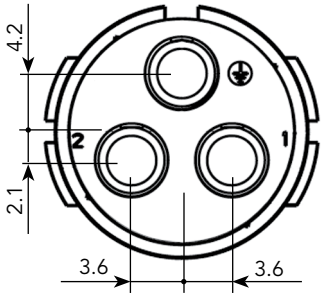

Note: Overmoulded cable assembly dimensions available page 179.

Note: all dimensions are in mm

142G1 (Shell size 14, 2 + ground, 3x#8)

Accessories and Tooling

Jam Nut or NPT Threaded Receptacle Sealing Caps

IP68/69K

Part number
UTS14DCG

IP68/69K Metal terminal

Part number
UTS14DCGR

Hand Tool

Part number
M317

Plug Sealing Cap

IP68/69K

Part number
UTS614DCG

Positioner + Locator Setting #8

Part number
VGE10078A

Plastic Protective Cap

Part numbers	
Receptacle cap	Plug cap
85005588A	85005597

Gasket

Part numbers
UTFD14B

Extraction Tool #8

Part number
51060210936

Color Coding Rings

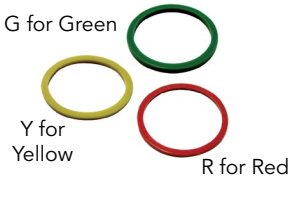

Part numbers	
Receptacles	Plugs
UTS714CCRR	UTS614CCRR
UTS714CCRY	UTS614CCRY
UTS714CCRG	UTS614CCRG

142G1 (Shell size 14, 2 + ground, 3x#8)

Contacts

#8	Contact type	AWG	Part number		Max wire Ø	Max insulator Ø
			Male	Female		
Crimp	Machined	16	82913601A(1)	82913600A(1)	1.72 mm	6.5 mm
		14	82913603A(1)	82913602A(1)	2.22 mm	
		12	82913605A(1)	82913604A(1)	2.82 mm	
		10	82913607A(1)	82913606A(1)	3.50 mm	
		8	82913609A(1)	82913608A(1)	4.35 mm	
PCB	Machined (2)	-	82911685NPC(1)	82911684NPC(1)	-	-

(1): Example of plating, for other plating see page 164
(2): For dimensions see page 168

Electrical Characteristics

UL
44A 600V UL94 V-0

CSA
30A 600V UL94 V-0

IEC
40A 300V 4kV 3

UTS 142G1 Derating Curves

Test conditions

Contact used:
Machined contacts
Wires used:
8.37mm²

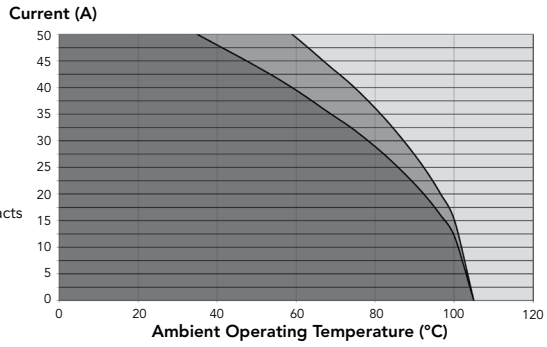

Current use | Limited use | Not recommended use

8E3/8D3 (Shell size 8, 3x#20)

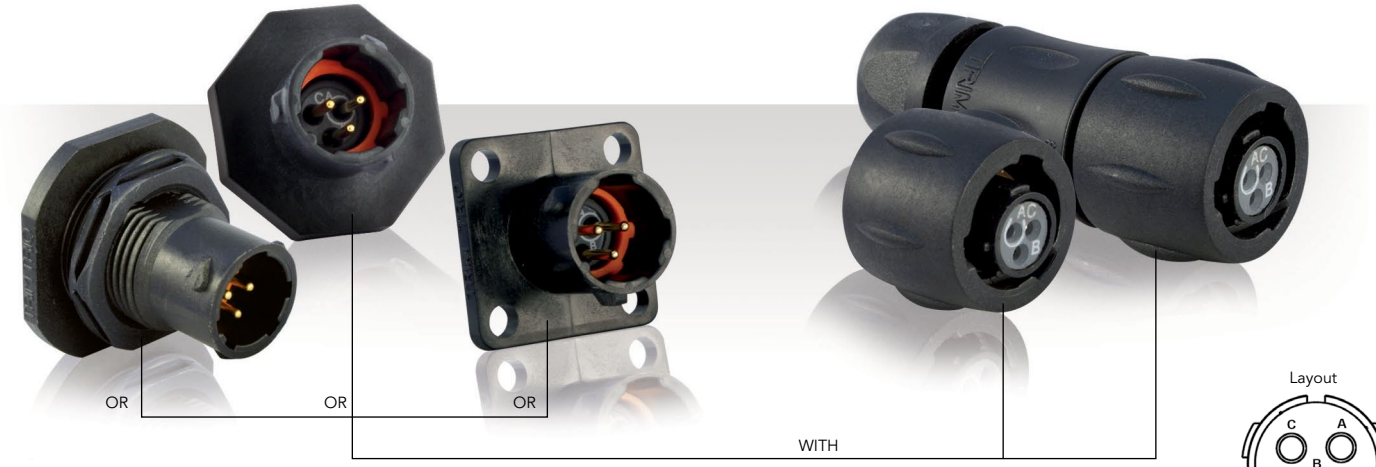

Layout

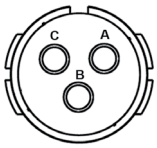

Connector Part Numbers

Contact type	Connector type	Backshell	Part number	
			Male insert	Female insert
Handsolder electrical contacts loaded see page 39	Square flange receptacle	Without (Fig. 1)	UTS08E3P	UTS08E3S
	Plug	Without (Fig. 7)	UTS68E3P	UTS68E3S
		Cable gland (Fig. 8)	UTS6JC8E3P	UTS6JC8E3S
	Jam nut receptacle	Without (Fig. 4)	UTS78E3P	UTS78E3S
	M12 threaded receptacle	Without (Fig.3)	UTS78E3PM12	UTS78E3SM12
PCB contacts loaded see page 39	Square flange receptacle	Without (Fig. 2)	UTS08D3P	UTS08D3S
	Jam nut receptacle with stand off and with hold down clips	Without (Fig. 6)	UTS78D3P32	UTS78D3S32
	Jam nut receptacle with stand off and without hold down clip	Without (Fig. 5)	UTS78D3P	UTS78D3S
	M12 threaded receptacle	Without (Fig.3)	UTS78D3PM12	UTS78D3SM12

Possibilities of discrimination/keying methods see page 208

Sealed unmated

Overmoulded Cable Assembly Part Numbers

Overmoulding type	Connector type	Wire size (mm²)	Harmonized cable part number (1)	Part number (length: 1m.)*	
				Male plug	Female plug
Straight ending	Plug	0.5	H05 VV - F 3x0.5	HAUTS0V8E3PST100	HAUTS0V8E3SST100
Right angle ending	Plug	0.5	H05 VV - F 3x0.5	HAUTS0V8E3PRA100	HAUTS0V8E3SRA100

(1) Other cable available on demand

* Other lengths available on demand

8E3/8D3 (Shell size 8, 3x#20)

Dimensions

Square Flange Receptacle - UTS0

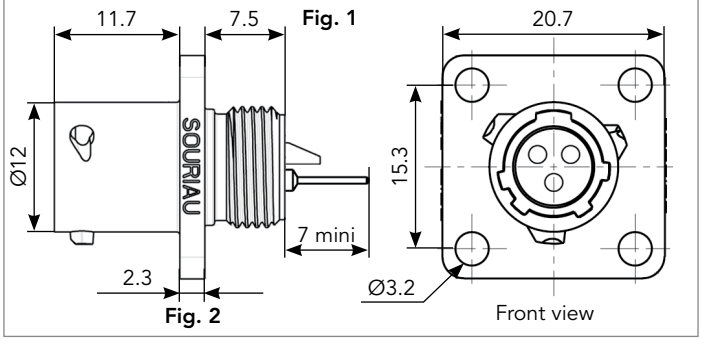

M12 Threaded Receptacle - UTS7

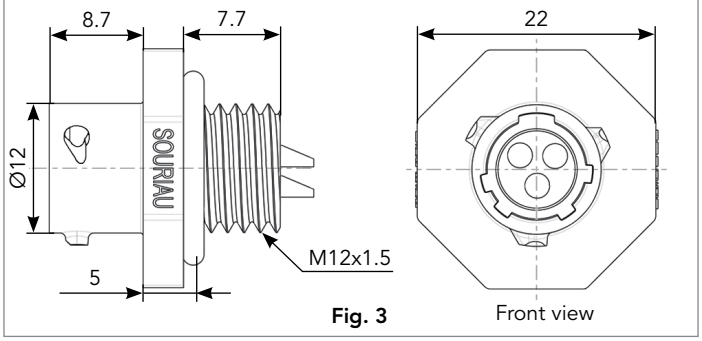

Jam Nut Receptacle - UTS7

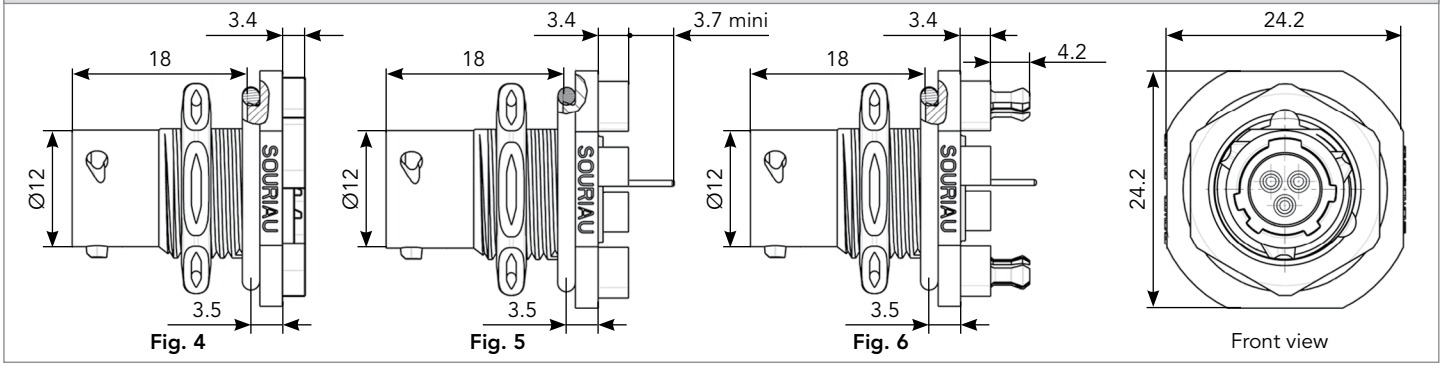

Plug - UTS6

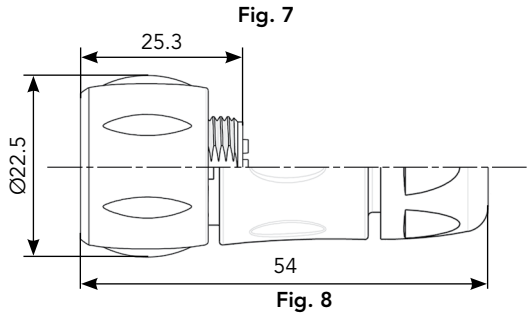

Mated Connector Lengths

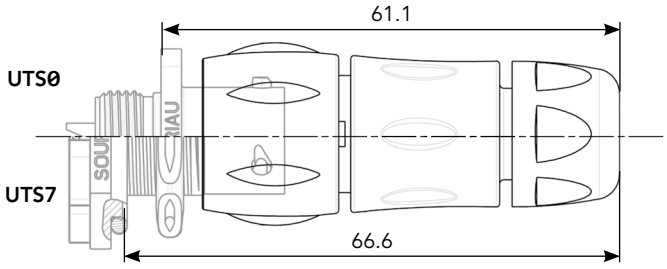

Panel Cut Out

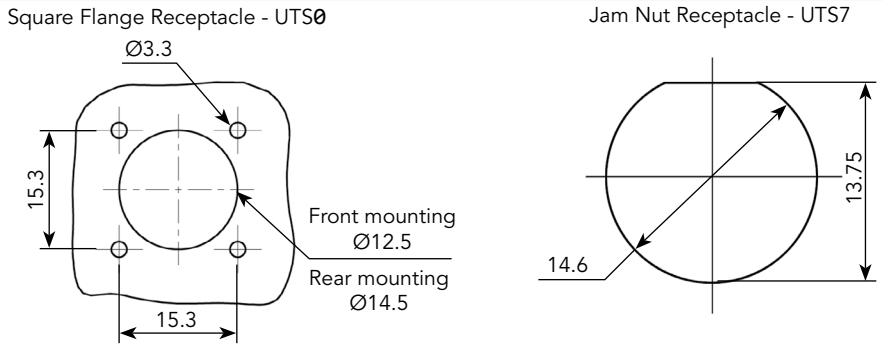

Drilling Pattern

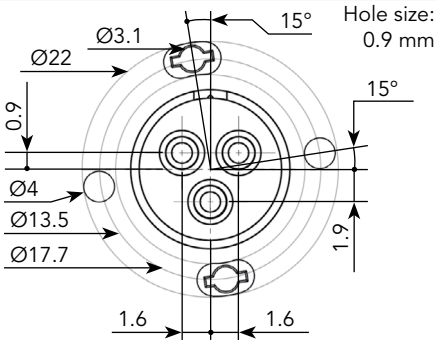

Note: Overmoulded cable assembly dimensions available page 179.

Note: all dimensions are in mm

8E3/8D3 (Shell size 8, 3x#20)

Accessories

Jam Nut Sealing Caps

IP68/69K

Part number
UTS8DCG

IP68/69K Metal terminal

Part number
UTS8DCGR

Square Flange Sealing Cap

IP68/69K Metal terminal

Part number
UTS8DCGE

Plug Protective Cap

IP40

Part number
UTS68C

Plastic Protective Cap

Part numbers	
Receptacle cap	Plug cap
85005585A	85005594

Gasket

Part numbers
UTFD11B

Color Coding Rings

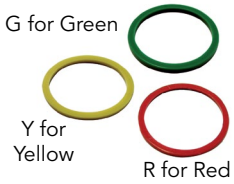

Part numbers	
Receptacles	Plugs
UTS78CCRR	UTS68CCRR
UTS78CCRY	UTS68CCRY
UTS78CCRG	UTS68CCRG

8E3/8D3 (Shell size 8, 3x#20)

Contacts

#20	Contact type	Plating	Cable acceptance (AWG)	Wire stripping length
Handsolder	Loaded in the connector	Min 0.4µ gold over 0.8µ Ni	22 to 18	5 mm
PCB	Machined (1)	Min 0.4µ gold over 0.8µ Ni	-	-

(1): For dimensions see page 169

Electrical Characteristics

UL
7A 250V UL94 HB

CSA
7A 250V UL94 HB

IEC
7A 32V 1.5kV 3

UTS 8E3/8D3 Derating Curves

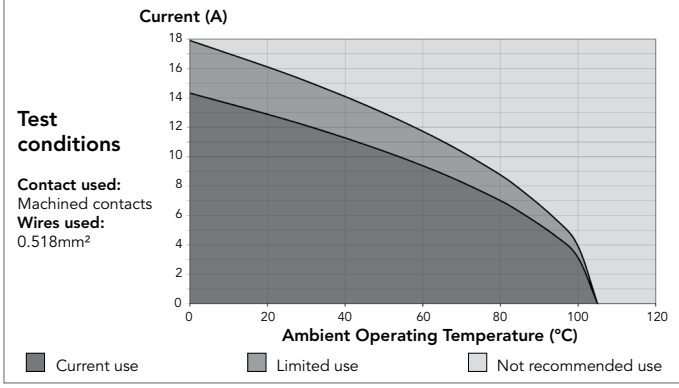

8E3A/8E98 - 8D3A/8D98 (Shell size 8, 3x#20)

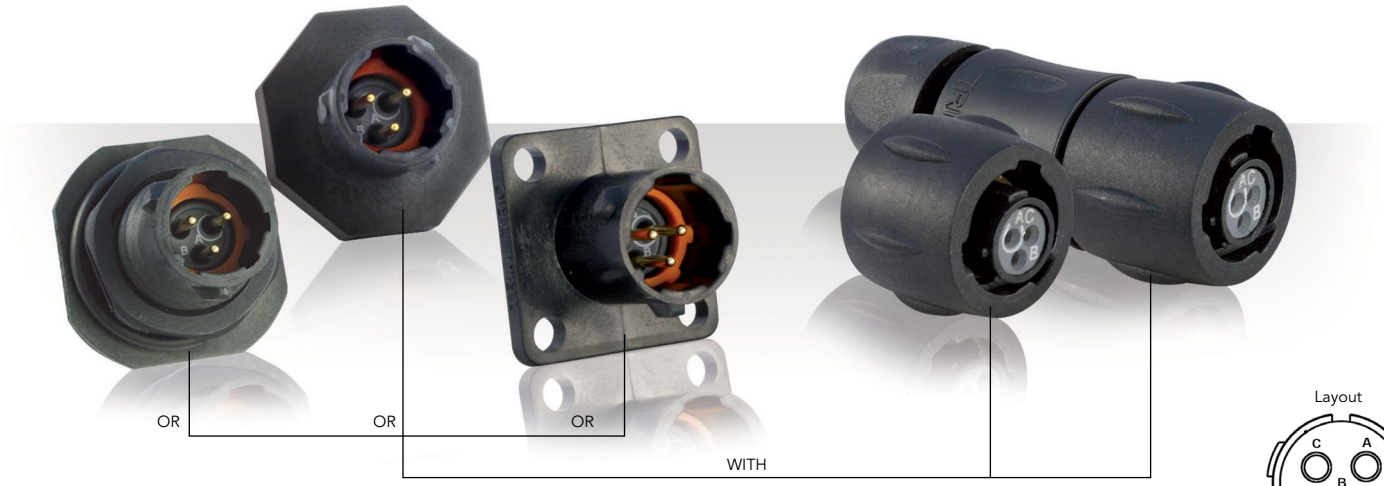

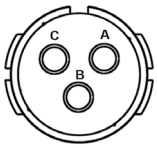

Connector Part Numbers

Contact type	Connector type	Backshell	Part number	
			Male insert	Female insert
Handsolder electrical contacts loaded see page 43	Square flange receptacle	Without (Fig. 1)	UTS08E3AP	UTS08E3AS
			UTS08E98P	UTS08E98S
	Plug	Without (Fig. 7)	UTS68E3AP	UTS68E3AS
			UTS68E98P	UTS68E98S
		Cable gland (Fig. 8)	UTS6JC8E3AP	UTS6JC8E3AS
			UTS6JC8E98P	UTS6JC8E98S
	Jam nut receptacle	Without (Fig. 4)	UTS78E3AP	UTS78E3AS
			UTS78E98P	UTS78E98S
	M12 threaded receptacle	Without (Fig. 3)	UTS78E3APM12	UTS78E3ASM12
			UTS78E98PM12	UTS78E98SM12
PCB contacts loaded see page 43	Square flange receptacle	Without (Fig. 2)	UTS08D3AP	UTS08D3AS
			UTS08D98P	UTS08D98S
	Jam nut receptacle with stand off and with hold down clips	Without (Fig. 6)	UTS78D3AP32	UTS78D3AS32
			UTS78D98P32	UTS78D98S32
	Jam nut receptacle with stand off and without hold down clip	Without (Fig. 5)	UTS78D3AP	UTS78D3AS
			UTS78D98P	UTS78D98S
	M12 threaded receptacle	Without (Fig. 3)	UTS78D3APM12	UTS78D3ASM12
			UTS78D98PM12	UTS78D98SM12

Possibilities of discrimination/keying methods see page 208

Sealed unmated

Overmoulded Cable Assembly Part Numbers

Overmoulding type	Connector type	Wire size (mm²)	Harmonized cable part number (1)	Part number (length: 1m.)*	
				Male plug	Female plug
Straight ending	Plug	0.5	H05 VV - F 3x0.5	HAUTS0V8E3APST100	HAUTS0V8E3ASST100
Right angle ending	Plug	0.5	H05 VV - F 3x0.5	HAUTS0V8E3APRA100	HAUTS0V8E3ASRA100

(1) Other cable available on demand

* Other lengths available on demand

8E3A/8E98 - 8D3A/8D98 (Shell size 8, 3x#20)

Dimensions

Square Flange Receptacle - UTS0

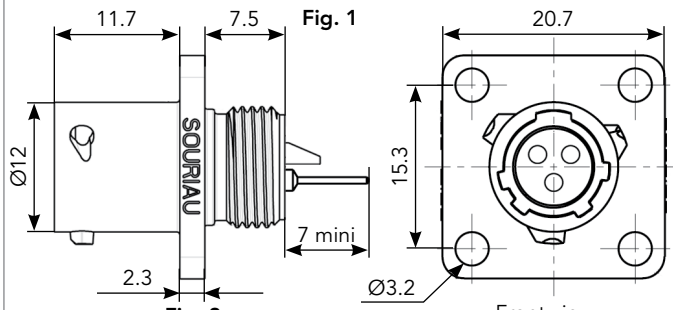

M12 Threaded Receptacle - UTS7

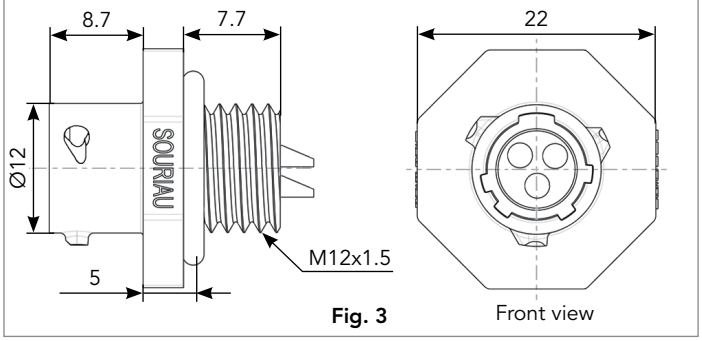

Jam Nut Receptacle - UTS7

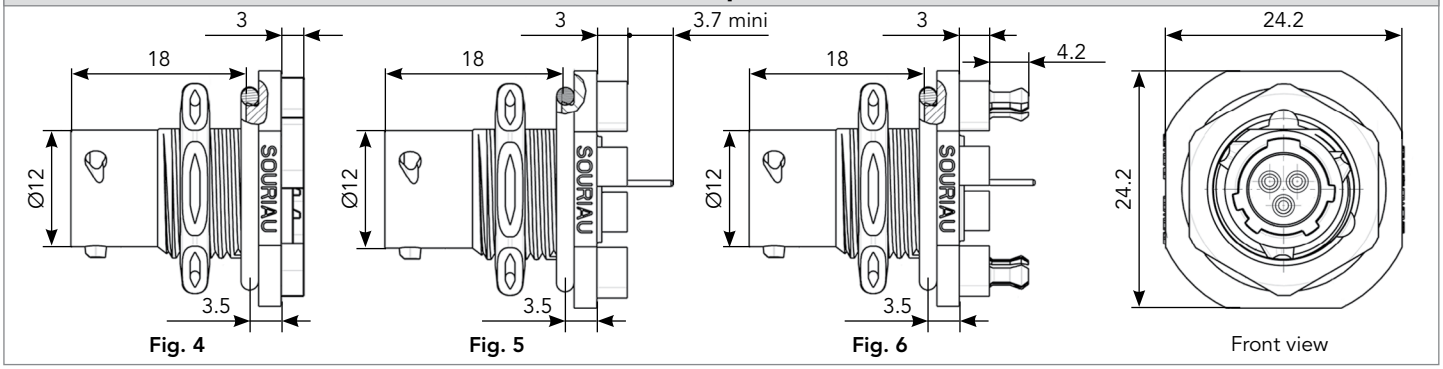

Plug - UTS6

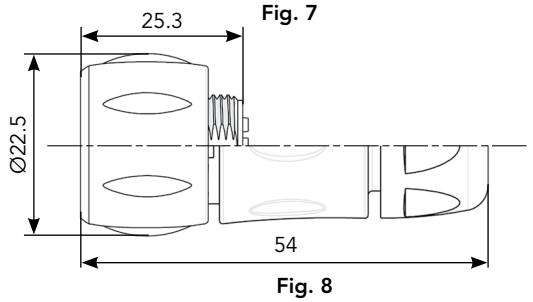

Mated Connector Lengths

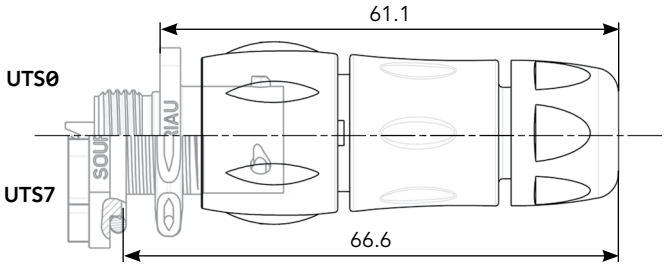

Panel Cut Out

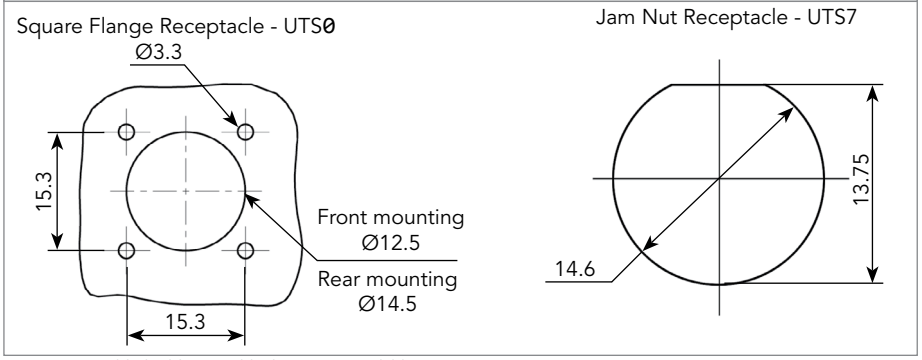

Drilling Pattern

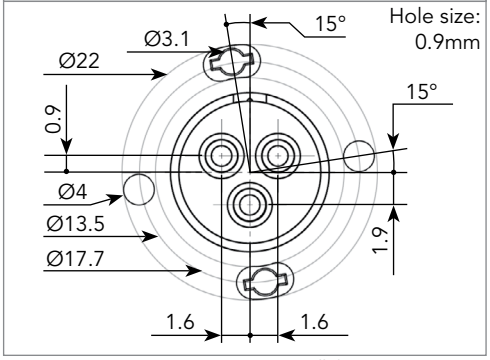

Note: Overmoulded cable assembly dimensions available page 179.

Note: all dimensions are in mm

8E3A/8E98 - 8D3A/8D98 (Shell size 8, 3x#20)

Accessories

Jam Nut Sealing Caps

IP68/69K

Part number
UTS8DCG

IP68/69K Metal terminal

Part number
UTS8DCGR

Square Flange Sealing Cap

IP68/69K Metal terminal

Part number
UTS8DCGE

Plug Protective Cap

IP40

Part number
UTS68C

Plastic Protective Cap

Part numbers	
Receptacle cap	Plug cap
85005585A	85005594

Gasket

Part numbers
UTFD11B

Color Coding Rings

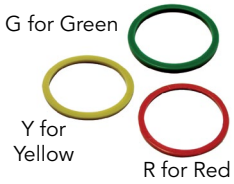

Part numbers	
Receptacles	Plugs
UTS78CCRR	UTS68CCRR
UTS78CCRY	UTS68CCRY
UTS78CCRG	UTS68CCRG

8E3A/8E98 - 8D3A/8D98 (Shell size 8, 3x#20)

Contacts

#20	Contact type	Plating	Cable acceptance (AWG)	Wire stripping length
Handsolder	Loaded in the connector	Min 0.4µ gold over 0.8µ Ni	22 to 18	5 mm
PCB	Machined (1)	Min 0.4µ gold over 0.8µ Ni	-	-

(1): For dimensions see page 169

Electrical Characteristics

UL
7A 250V UL94 HB

CSA
7A 250V UL94 HB

IEC
7A 50V 1.5kV 3

UTS 8E3A/98 - 8D3A/98 Derating Curves

Test conditions

Contact used:
Machined contacts
Wires used:
0.518mm²

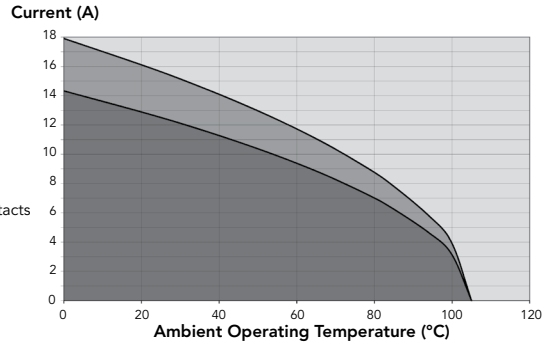

Current use | Limited use | Not recommended use

8E33/8D33 (Shell size 8, 3x#20)

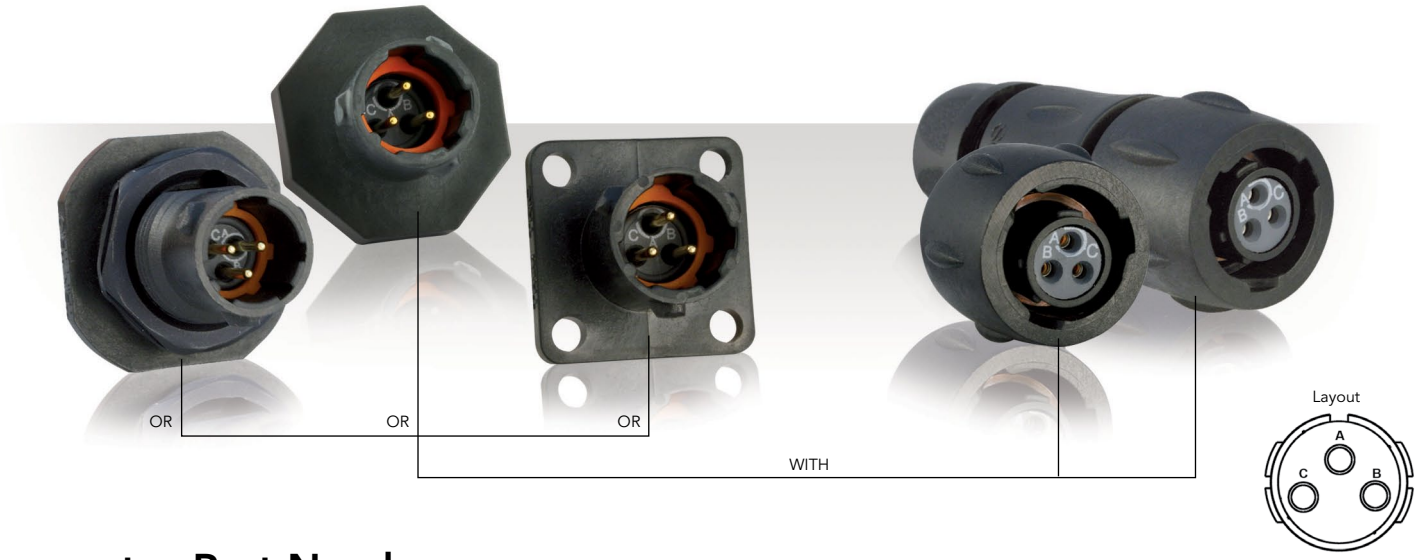

Connector Part Numbers

Contact type	Connector type	Backshell	Part number	
			Male insert	Female insert
Handsolder electrical contacts loaded see page 47	Square flange receptacle	Without (Fig. 1)	UTS08E33P	UTS08E33S
	Plug	Without (Fig. 7)	UTS68E33P	UTS68E33S
		Cable gland (Fig. 8)	UTS6JC8E33P	UTS6JC8E33S
	Jam nut receptacle	Without (Fig. 4)	UTS78E33P	UTS78E33S
	M12 threaded receptacle	Without (Fig. 3)	UTS78E33PM12	UTS78E33SM12
PCB contacts loaded see page 47	Square flange receptacle	Without (Fig. 2)	UTS08D33P	UTS08D33S
	Jam nut receptacle with stand off and with hold down clips	Without (Fig. 6)	UTS78D33P32	UTS78D33S32
	Jam nut receptacle with stand off and without hold down clip	Without (Fig. 5)	UTS78D33P	UTS78D33S
	M12 threaded receptacle	Without (Fig. 3)	UTS78D33PM12	UTS78D33SM12

Possibilities of discrimination/keying methods see page 208

Sealed unmated

Overmoulded Cable Assembly Part Numbers

Overmoulding type	Connector type	Wire size (mm²)	Harmonized cable part number (1)	Part number (length: 1m.)*	
				Male plug	Female plug
Straight ending	Plug	0.5	H05 VV - F 3x0.5	HAUTS0V8E33APST100	HAUTS0V8E33ASST100
Right angle ending	Plug	0.5	H05 VV - F 3x0.5	HAUTS0V8E33APRA100	HAUTS0V8E33ASRA100

(1) Other cable available on demand

* Other lengths available on demand

8E33/8D33 (Shell size 8, 3x#20)

Dimensions

Square Flange Receptacle - UTS0

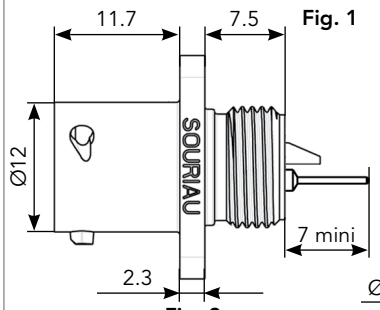

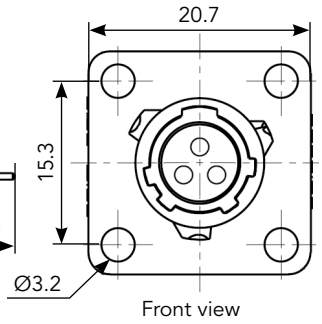

M12 Threaded Receptacle - UTS7

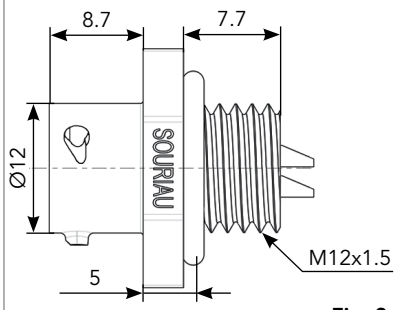

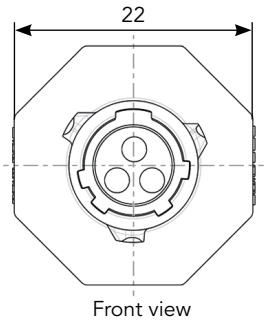

Jam Nut Receptacle - UTS7

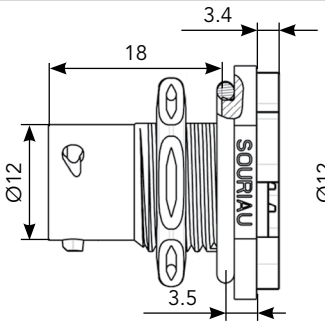

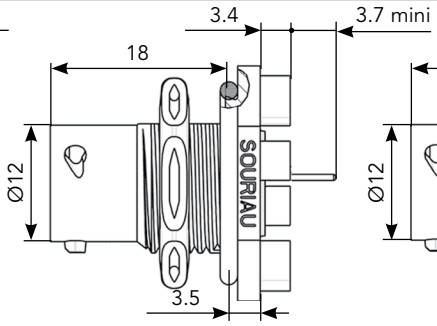

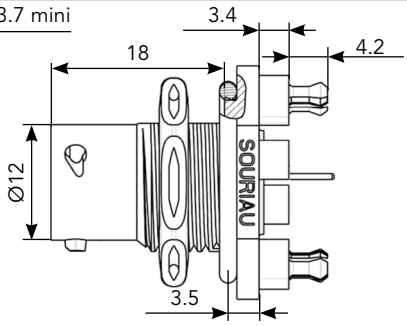

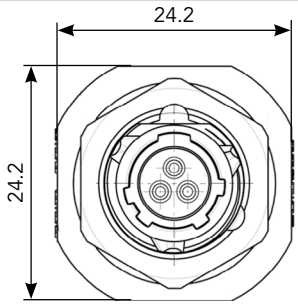

Plug - UTS6

Fig. 7

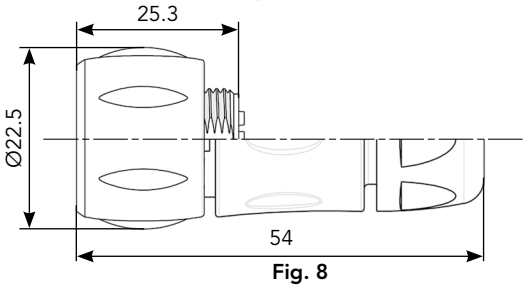

Fig. 8

Mated Connector Lengths

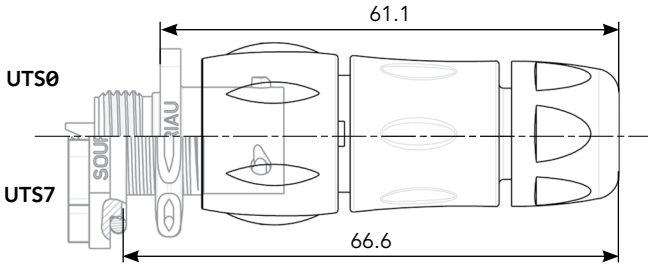

Panel Cut Out

Square Flange Receptacle - UTS0

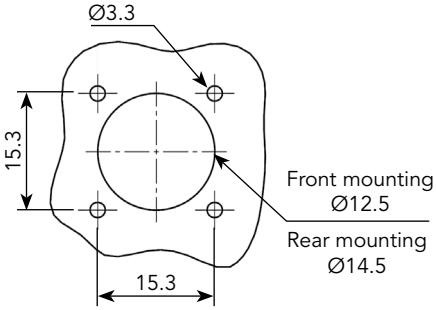

Jam Nut Receptacle - UTS7

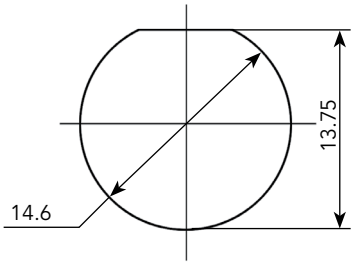

Drilling Pattern

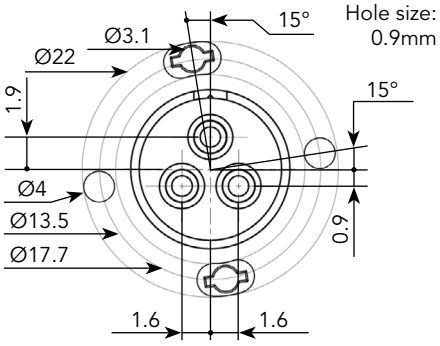

Note: Overmoulded cable assembly dimensions available page 179.

Note: all dimensions are in mm

8E33/8D33 (Shell size 8, 3x#20)

Accessories

Jam Nut Sealing Caps

IP68/69K

Part number
UTS8DCG

IP68/69K Metal terminal

Part number
UTS8DCGR

Square Flange Sealing Cap

IP68/69K Metal terminal

Part number
UTS8DCGE

Plug Protective Cap

IP40

Part number
UTS68C

Plastic Protective Cap

Part numbers	
Receptacle cap	Plug cap
85005585A	85005594

Gasket

Part numbers
UTFD11B

Color Coding Rings

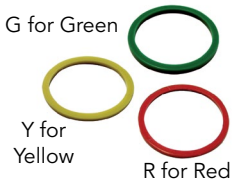

Part numbers	
Receptacles	Plugs
UTS78CCRR	UTS68CCRR
UTS78CCRY	UTS68CCRY
UTS78CCRG	UTS68CCRG

8E33/8D33 (Shell size 8, 3x#20)

Contacts

#20	Contact type	Plating	Cable acceptance (AWG)	Wire stripping length
Handsolder	Loaded in the connector	Min 0.4µ gold over 0.8µ Ni	22 to 18	5 mm
PCB	Machined [1]	Min 0.4µ gold over 0.8µ Ni	-	-

(1): For dimensions see page 169

Electrical Characteristics

UL
7A 250V UL94 HB

CSA
7A 250V UL94 HB

IEC
7A 50V 1.5kV 3

UTS 8E33/8D33 de-rating curves

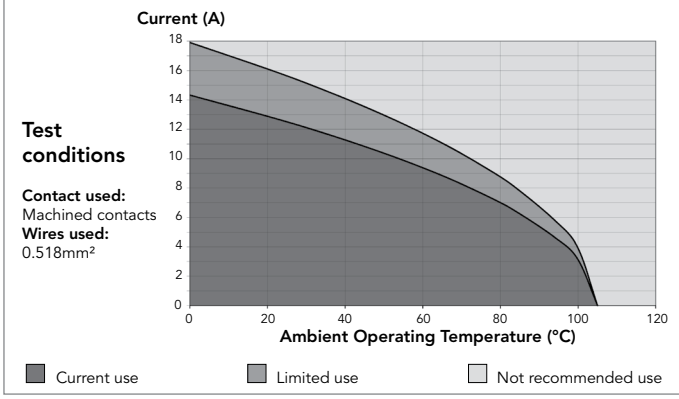

12E3/12D3 (Shell size 12, 3x#16)

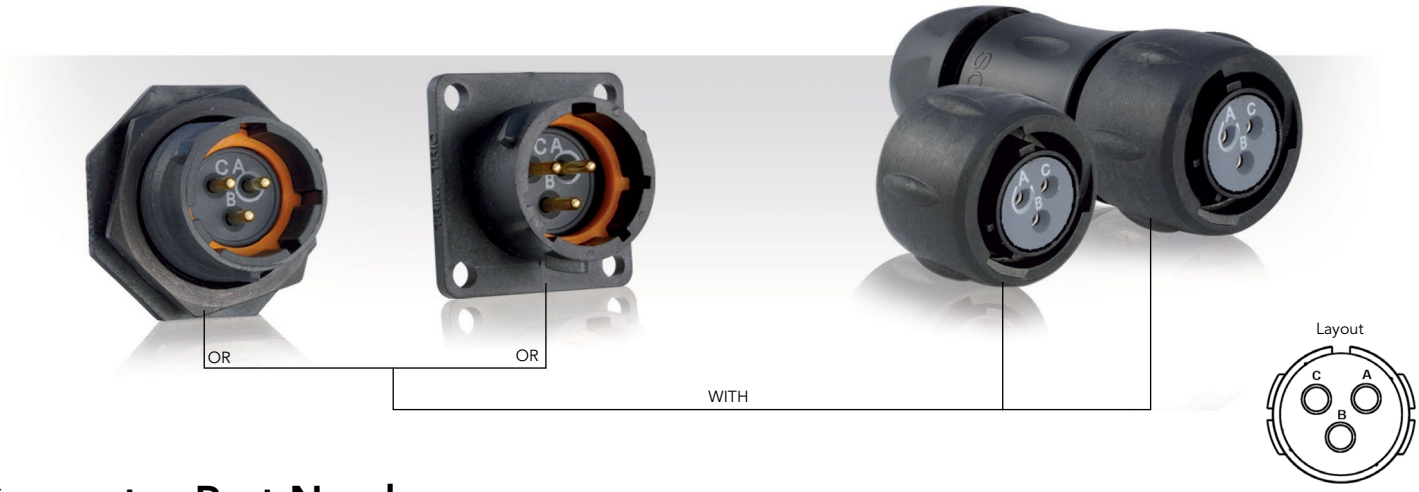

Connector Part Numbers

Contact type	Connector type	Backshell	Part number	
			Male insert	Female insert
Handsolder electrical contacts loaded see page 51	Square flange receptacle	Without (Fig. 6)	UTS012E3P	UTS012E3S
	Plug	Without (Fig. 1)	UTS612E3P	UTS612E3S
		Cable gland (Fig. 2)	UTS6JC12E3P	UTS6JC12E3S
	Jam nut receptacle	Without (Fig. 3)	UTS712E3P	UTS712E3S
PCB contacts loaded see page 51	Square flange receptacle	Without (Fig. 7)	UTS012D3P	UTS012D3S
	Jam nut receptacle with stand off and with hold down clips	Without (Fig. 5)	UTS712D3P32	UTS712D3S32
	Jam nut receptacle with stand off and without hold down clip	Without (Fig. 4)	UTS712D3P	UTS712D3S

Possibilities of discrimination/keying methods see page 208

Sealed unmated

Overmoulded Cable Assembly Part Numbers

Overmoulding type	Connector type	Wire size (mm²)	Harmonized cable part number (1)	Part number (length: 1m.)*	
				Male plug	Female plug
Straight ending	Plug	1.5	H05 VV - F 3x1.5	HAUTS0V12E3PST100	HAUTS0V12E3SST100
Right angle ending	Plug	1.5	H05 VV - F 3x1.5	HAUTS0V12E3PRA100	HAUTS0V12E3SRA100

(1) Other cable available on demand

* Other lengths available on demand

12E3/12D3 (Shell size 12, 3x#16)

Dimensions

Plug - UTS6

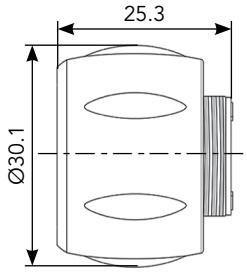

Fig. 1

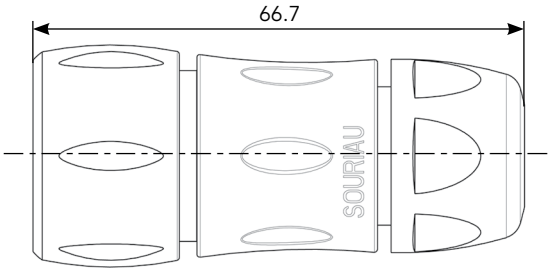

Fig. 2

Jam Nut Receptacle - UTS7

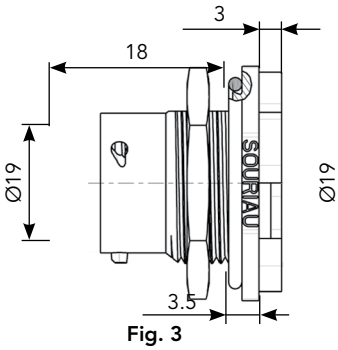

Fig. 3

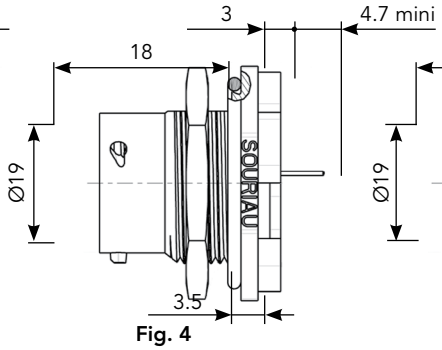

Fig. 4

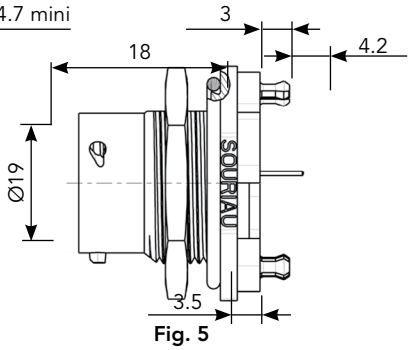

Fig. 5

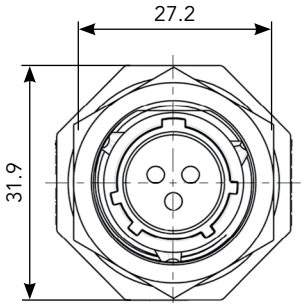

Front view

Square Flange Receptacle - UTS0

Fig. 7

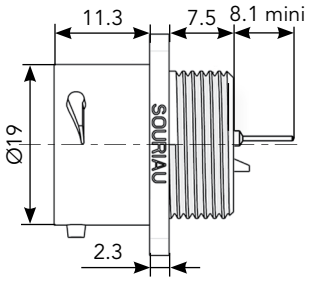

Fig. 6

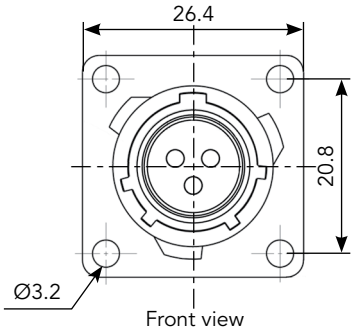

Front view

Mated Connector Lengths

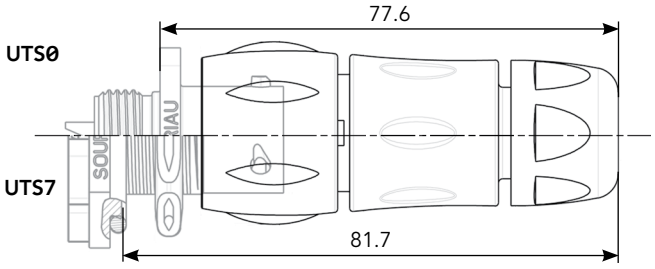

Panel Cut Out

Square Flange Receptacle - UTS0

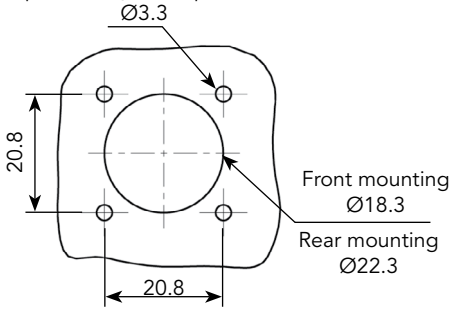

Jam Nut Receptacle - UTS7

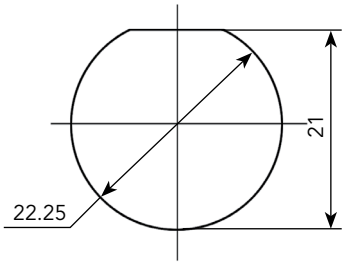

Drilling Pattern

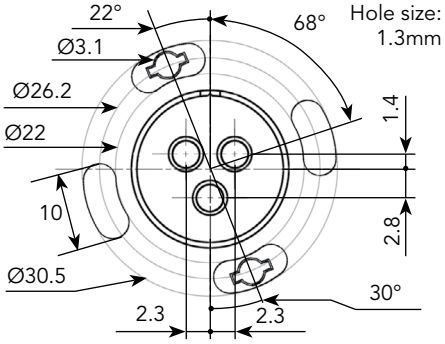

Note: Overmoulded cable assembly dimensions available page 179.

Note: all dimensions are in mm

12E3/12D3 (Shell size 12, 3x#16)

Accessories

Jam Nut Sealing Caps

IP68/69K

Part number
UTS12DCG

IP68/69K Metal terminal

Part number
UTS12DCGR

Plug Sealing Cap

IP68/69K

Part number
UTS612DCG

Square Flange Sealing Cap

IP68/69K Metal terminal

Part number
UTS12DCGE

Plastic Protective Cap

Part numbers	
Receptacle cap	Plug cap
85005587A	85005596

Gasket

Part numbers
UTFD13B

Color Coding Rings

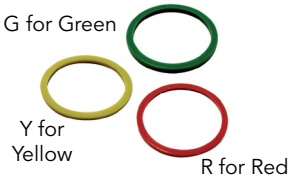

Part numbers	
Receptacles	Plugs
UTS712CCRR	UTS612CCRR
UTS712CCRY	UTS612CCRY
UTS712CCRG	UTS612CCRG

12E3/12D3 (Shell size 12, 3x#16)

Contacts

#16	Contact type	Plating	Cable acceptance (AWG)	Wire stripping length
Handsolder	Loaded in the connector	Min 0.4µ gold over 0.8µ Ni	18 to 14	5 mm
PCB	Machined (1)	Min 0.4µ gold over 0.8µ Ni	-	-

(1): For dimensions see page 169

Electrical Characteristics

UL
13A 600V UL94 HB

CSA
13A 600V UL94 HB

IEC
16A 150V 2.5kV 3

UTS 12E3/12D3 Derating Curves

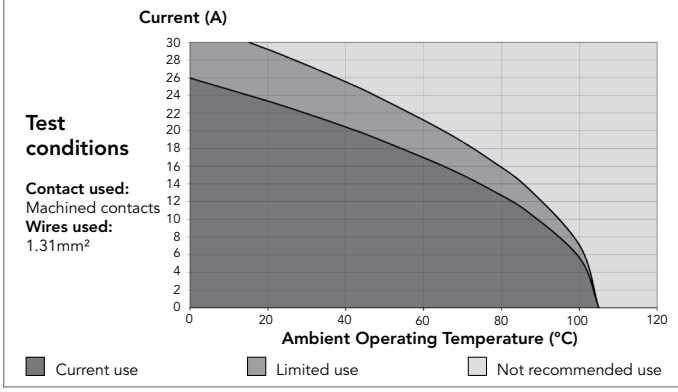

124 - 12E4/12D4 (Shell size 12, 3 + ground, 4x#16)

Connector Part Numbers

Contact type	Connector type	Backshell	Part number	
			Male insert	Female insert
Crimp contacts supplied separately see page 55	Square flange receptacle	Without (Fig. 1)	UTS0124P	-
	Jam nut receptacle	Without (Fig. 4)	UTS7124P	UTS7124S
	Free hanging receptacle	Cable gland (Fig. 12)	UTS1JC124P	UTS1JC124S
	Plug	Without (Fig. 10)	UTS6124P	UTS6124S
		Cable gland (Fig. 11)	UTS6JC124P	UTS6JC124S
Screw contacts loaded	Jam nut receptacle	Without (Fig. 6 & 7)	UTS7124PSCR	UTS7124SSCR
	Plug	Without (Fig. 10)	UTS6124PSCR	UTS6124SSCR
		Cable gland (Fig. 11)	UTS6JC124PSCR	UTS6JC124SSCR
	Free hanging receptacle	Cable gland (Fig. 9)	UTS1JC124PSCR	-
PCB contacts supplied separately see page 55	Square flange receptacle	Without (Fig. 3)	UTS0124P	-
	Jam nut receptacle	Without (Fig. 5)	UTS7124P	UTS7124S
Handsolder electrical contacts loaded see page 55	Square flange receptacle	Without (Fig. 2)	UTS012E4P	UTS012E4S
	Jam nut receptacle	Without (Fig. 9)	UTS712E4P	UTS712E4S
	Plug	Without (Fig. 10)	UTS612E4P	UTS612E4S
	Plug	Cable gland (Fig. 11)	UTS6JC12E4P	UTS6JC12E4S
PCB contacts loaded	Square flange receptacle	Without (Fig. 3)	UTS012D4P	UTS012D4S
	Jam nut receptacle with stand off and without hold down clip	Without (Fig.8)	UTS712D4P	UTS712D4S
	Jam nut receptacle with stand off and with hold down clips	Without (Fig. 9)	UTS712D4P32	UTS712D4S32

Sealed unmated

Overmoulded Cable Assembly Part Numbers

Overmoulding type	Connector type	Wire size (mm²)	Harmonized cable part number (1)	Part number (length: 1m.)*	
				Male plug	Female plug
Straight ending	Plug	1.5	H05 VV - F 4x1.5	HAUTS0V124PST100	HAUTS0V124SST100
				HAUTS0V12E4PST100	HAUTS0V12E4SST100
Right angle ending	Plug	1.5	H05 VV - F 4x1.5	HAUTS0V124PRA100	HAUTS0V124SRA100
				HAUTS0V12E4PRA100	HAUTS0V12E4SRA100

(1) Other cable available on demand

* Other lengths available on demand

124 - 12E4/12D4 (Shell size 12, 3 + ground, 4x#16)

Dimensions

Square Flange Receptacle - UTS0

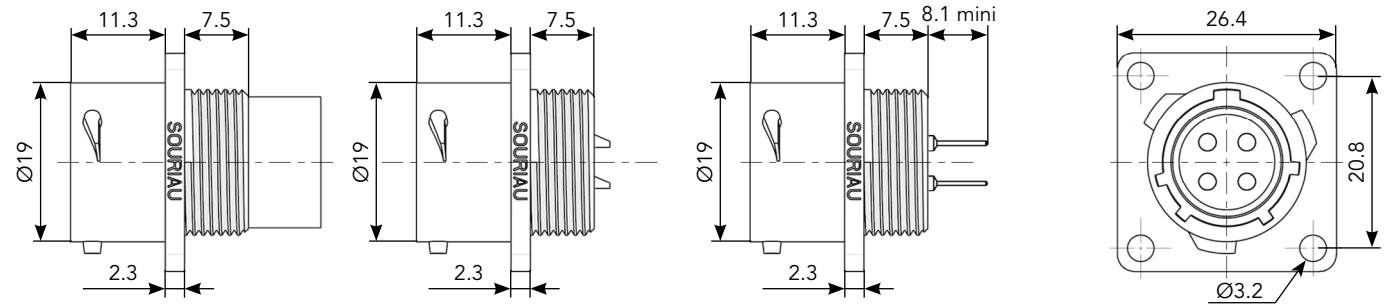

Jam Nut Receptacle - UTS7

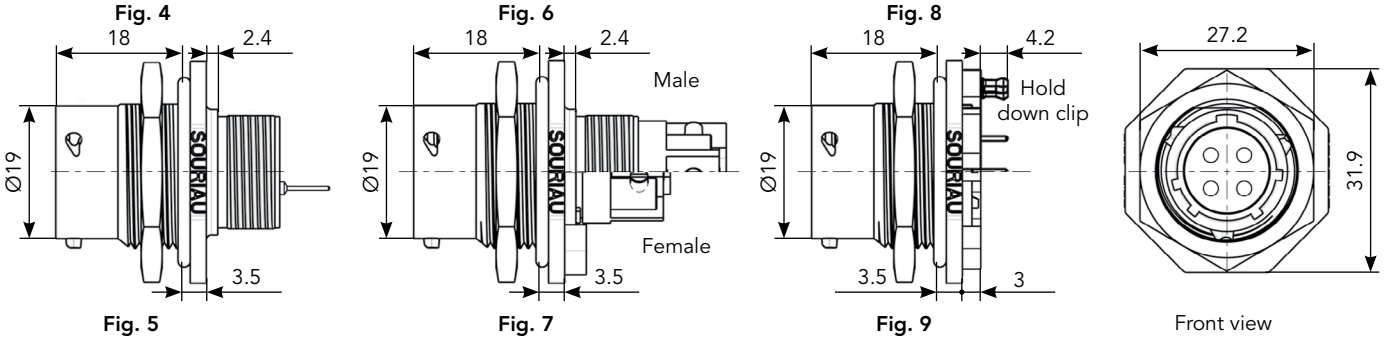

Free Hanging - UTS1 / Plug - UTS6

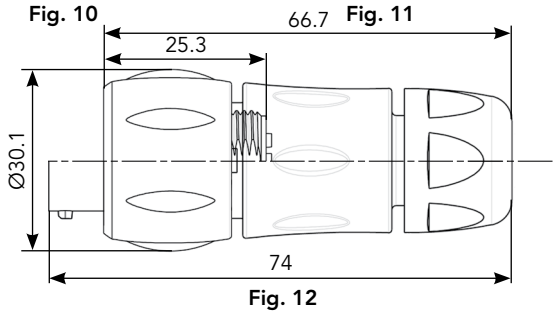

Mated Connector Lengths

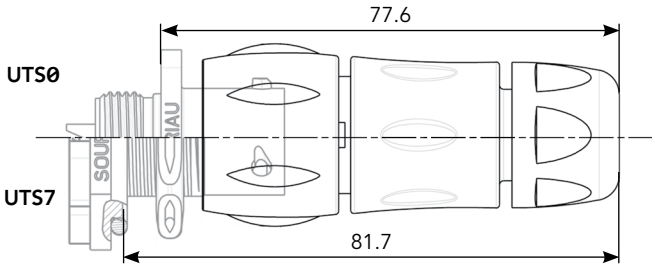

Panel Cut Out

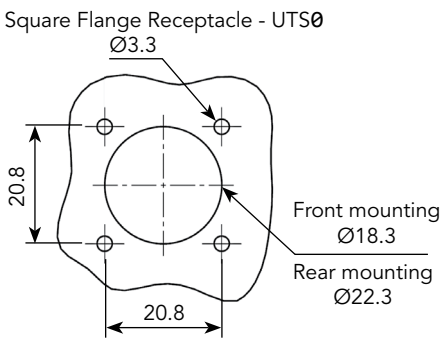

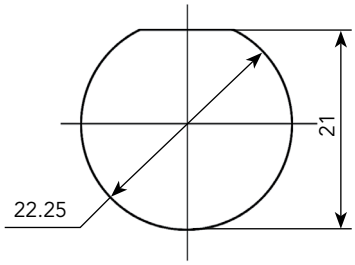

Drilling Pattern

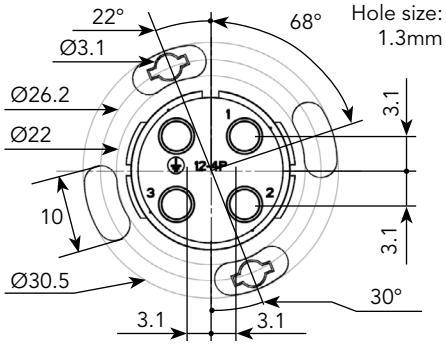

Note: Overmoulded cable assembly dimensions available page 179.

Note: all dimensions are in mm

124 - 12E4/12D4 (Shell size 12, 3 + ground, 4x#16)

Accessories and Tooling

Jam Nut Sealing Caps

IP68/69K

Part number
UTS12DCG

IP68/69K Metal terminal

Part number
UTS12DCGR

Handle (without Head)

Part number
SHANDLES

Tool Kit

Part number
TOOLKIT

Plug Sealing Cap

IP68/69K

Part number
UTS612DCG

Square Flange Sealing Cap

IP68/69K Metal terminal

Part number
UTS12DCGE

Plastic Protective Cap

Part numbers	
Receptacle cap	Plug cap
85005587A	85005596

Gasket

Part numbers
UTFD13B

Color Coding Rings

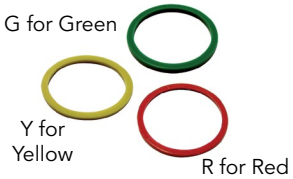

Part numbers	
Receptacles	Plugs
UTS712CCRR	UTS612CCRR
UTS712CCRY	UTS612CCRY
UTS712CCRG	UTS612CCRG

Crimp Tooling (without Shandles)

Contacts	Contact size	Part number of head
RM/RC 28M1K(1)	Standard contacts #16 Ø 1.6mm	S16RCM20*
RM/RC 24M9K(1)		S16RCM20*
RM/RC 20M13K(1)		S16RCM20*
RM/RC 20M12K(1)		S16RCM20*
RM/RC 16M23K(1)		S16RCM16*
RM/RC 14M30K(1)		S16RCM14*
SM/SC 24ML1TK6(1)		S16SCM20*
SM/SC 20ML1TK6(1)		S16SCM20*
SM/SC 16ML1TK6(1)		S16SCML1*
SM/SC 14ML1TK6(1)		S16SCML1*
SM/SC 16ML11TK6(1)		S16SCML11*
RMDXK10D28K	Coaxial contacts	M10S1J with die set & stop bushing see page 200 to 204
RCDXK1D28K		
RM/RC DX60xxD28K		
RM/RC DXK10D28 + york090		
RM/RC DX60xxD28		

(1): Example of plating, for other plating options see page 164
* Heads to be used with handle PN: SHANDLES

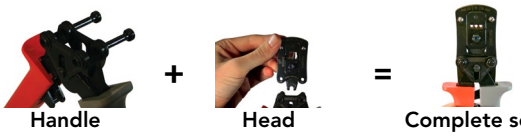

124 - 12E4/12D4 (Shell size 12, 3 + ground, 4x#16)

Contacts

#16	Contact type	AWG	Part number		Max wire Ø	Max insulator Ø
			Male	Female		
Crimp	Machined	30-28	RM28M1K(1)	RC28M1K(1)	0.55	1.00
		26-24	RM24M9K(1)	RC24M9K(1)	0.80	1.60
		22-20	RM20M13K(1)	RC20M13K(1)	1.15	1.80
		22-20	RM20M12K(1)	RC20M12K(1)	1.15	2.20
		20-16	RM16M23K(1)	RC16M23K(1)	1.80	3.20
		16-14	RM14M30K(1)	RC14M30K(1)	2.30	3.20
	Stamped & Formed reeled contacts See note (2) for loose piece	26-24	SM24M1TK6(1)(2)	SC24M1TK6(1)(2)	-	0.90-1.60
		22-20	SM20M1TK6(1)(2)	SC20M1TK6(1)(2)	-	1.20-2.10
		18-16	SM16M1TK6(1)(2)	SC16M1TK6(1)(2)	-	3.20
		18-16	SM16M11TK6(1)(2)	SC16M11TK6(1)(2)	-	3.00
		14	SM14M1TK6(1)(2)	SC14M1TK6(1)(2)	-	3.20
PCB	Machined (3)	-	RM20M12E83K(1)	RC20M12E84K(1)	-	-
Coaxial	Cable Multipiece	see pages 167, 200 to 206	RMDXK10D28	RCDXK1D28	-	-
	Cable Monocrimp		RMDX60xxD28	RCDX60xxD28	-	-
	Twisted pair Multipiece		RMDXK10D28 + york090	RCDXK1D28 + york090	-	-
	Twisted pair Monocrimp		RMDX60xxD28	RCDX60xxD28	-	-
Fiber optic	POF contacts (Plastic Optical Fiber)	-	RMPOF1000	RCPOF1000B	-	-
Hand-solder	Loaded in the connector	14-18	-	-		

(1): Example of plating, for other plating see page 164 (2): Loose piece contact available if putting L. Example: SM20ML1TK6 (3): For dimensions see page 168 Note: all dimensions are in mm

Electrical Characteristics

UL
10A 500V UL94 V-0

CSA
7A 500V UL94 V-0

IEC
16A 300V 4kV 3
Temperature elevation: 50°C

UTS 124 - 12E4/12D4 Derating Curves

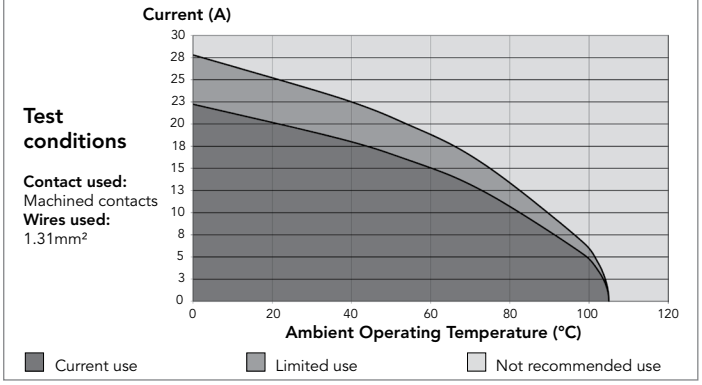

183G1 (Shell size 18, 3 + ground, 4x#8)

Layout

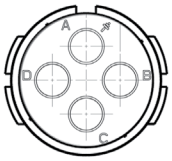

Connector Part Numbers

Contact type	Connector type	Backshell	Part number	
			Male insert	Female insert
Crimp contacts supplied separately see page 59	NPT threaded receptacle	Without (Fig. 1)	-	UTS7183G1SNPT
	Plug	Without (Fig. 2)	UTS6183G1P	-
	Plug	Cable gland (Fig. 3)	UTS6JC183G1P	-
PCB contacts supplied separately see page 59	NPT threaded receptacle	Without (Fig. 1)	-	UTS7183G1SNPT
	Plug	Without (Fig. 2)	UTS6183G1P	-

183G1 (Shell size 18, 3 + ground, 4x#8)

Dimensions

NPT Threaded Receptacle - UTS7

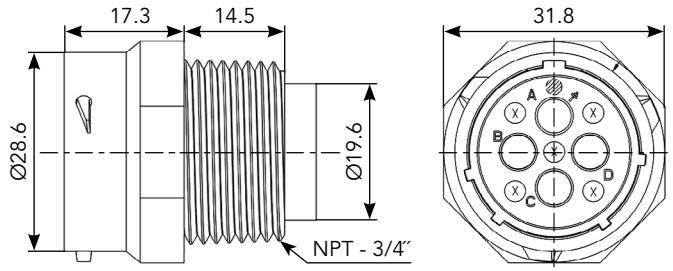

Fig. 1

Plug - UTS6

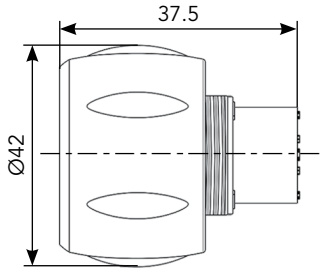

Fig. 2

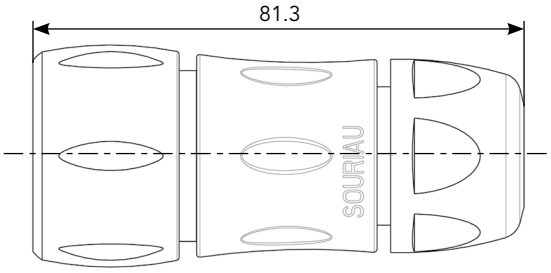

Fig. 3

Mated Connector Length - UTS6JC

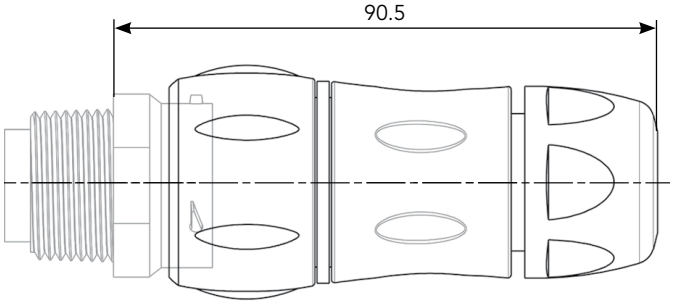

Panel cut

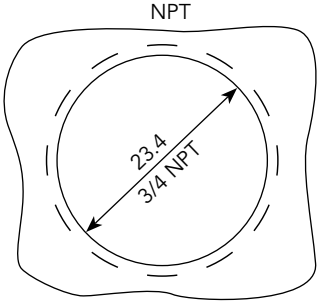

Drilling Pattern

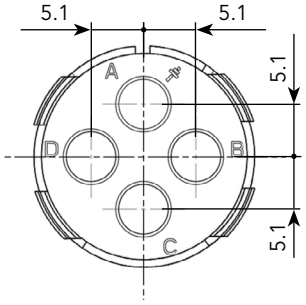

Note: all dimensions are in mm

183G1 (Shell size 18, 3 + ground, 4x#8)

Accessories and Tooling

Jam Nut or NPT Threaded Receptacle Sealing Caps

IP68/69K

Part number
UTS18DCG

IP68/69K Metal terminal

Part number
UTS18DCGR

Hand Tool

Part number
M317

Plug Sealing Cap

IP68/69K

Part number
UTS618DCG

Positioner + Locator Setting #8

Part number
VGE10078A

Plastic Protective Cap

Part numbers	
Receptacle cap	Plug cap
85005590A	85005599

Gasket

Part numbers
UTFD16B

Extraction Tool #8

Part number
51060210936

Color Coding Rings

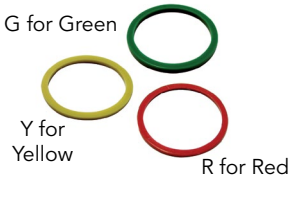

Part numbers	
Receptacles	Plugs
UTS718CCRR	UTS618CCRR
UTS718CCRY	UTS618CCRY
UTS718CCRG	UTS618CCRG

183G1 (Shell size 18, 3 + ground, 4x#8)

Contacts

#8	Contact type	AWG	Part number		Max wire Ø	Max insulator Ø
			Male	Female		
Crimp	Machined	16	82913601A(1)	82913600A(1)	1.72 mm	6.5 mm
		14	82913603A(1)	82913602A(1)	2.22 mm	
		12	82913605A(1)	82913604A(1)	2.82 mm	
		10	82913607A(1)	82913606A(1)	3.50 mm	
		8	82913609A(1)	82913608A(1)	4.35 mm	
PCB	Machined (2)	-	82911685NPC(1)	82911684NPC(1)	-	-

(1): Example of plating, for other plating see page 164
(2): For dimensions see page 168

Electrical Characteristics

UL
44A 600V UL94 V-0

CSA
26A 600V UL94 V-0

IEC
32A 300V 4kV 3

UTS 183G1 Derating Curves

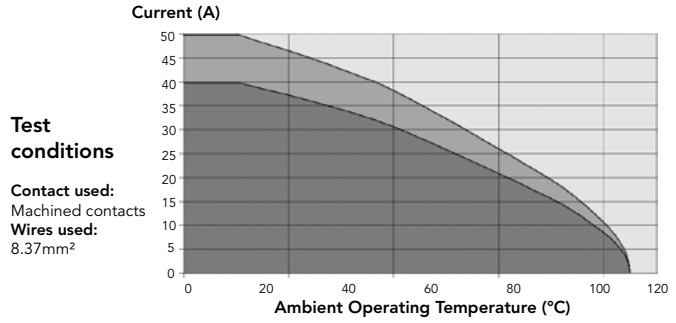

Test conditions

Contact used:
Machined contacts
Wires used:
8.37mm²

Current use | Limited use | Not recommended use

8E4/8D4 (Shell size 8, 4x#20)

Connector Part Numbers

Contact type	Connector type	Backshell	Part number	
			Male insert	Female insert
Handsolder electrical contacts loaded see page 63	Square flange receptacle	Without (Fig. 1)	UTS08E4P	UTS08E4S
	Plug	Without (Fig. 7)	UTS68E4P	UTS68E4S
		Cable gland (Fig. 8)	UTS6JC8E4P	UTS6JC8E4S
	Jam nut receptacle	Without (Fig. 4)	UTS78E4P	UTS78E4S
	M12 threaded receptacle	Without (Fig. 3)	UTS78E4PM12	UTS78E4SM12
PCB contacts loaded see page 63	Square flange receptacle	Without (Fig. 2)	UTS08D4P	UTS08D4S
	Jam nut receptacle with stand off and with hold down clips	Without (Fig. 6)	UTS78D4P32	UTS78D4S32
	Jam nut receptacle with stand off and without hold down clip	Without (Fig. 5)	UTS78D4P	UTS78D4S

Possibilities of discrimination/keying methods see page 208

Sealed unmated

Overmoulded Cable Assembly Part Numbers

Overmoulding type	Connector type	Wire size (mm²)	Harmonized cable part number (1)	Part number (length: 1m.)*	
				Male plug	Female plug
Straight ending	Plug	1.5	H05 VV - F 4x1.5	HAUTS0V8E4PST100	HAUTS0V8E4SST100
Right angle ending	Plug	1.5	H05 VV - F 4x1.5	HAUTS0V8E4PRA100	HAUTS0V8E4SRA100

(1) Other cable available on demand

* Other lengths available on demand

8E4/8D4 (Shell size 8, 4x#20)

Dimensions

Square Flange Receptacle - UTS0

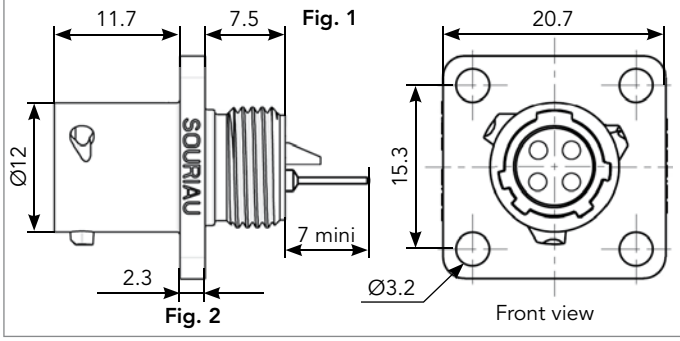

M12 Threaded Receptacle - UTS7

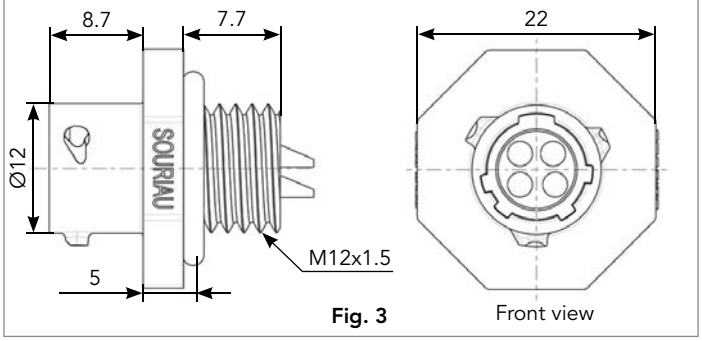

Jam Nut Receptacle - UTS7

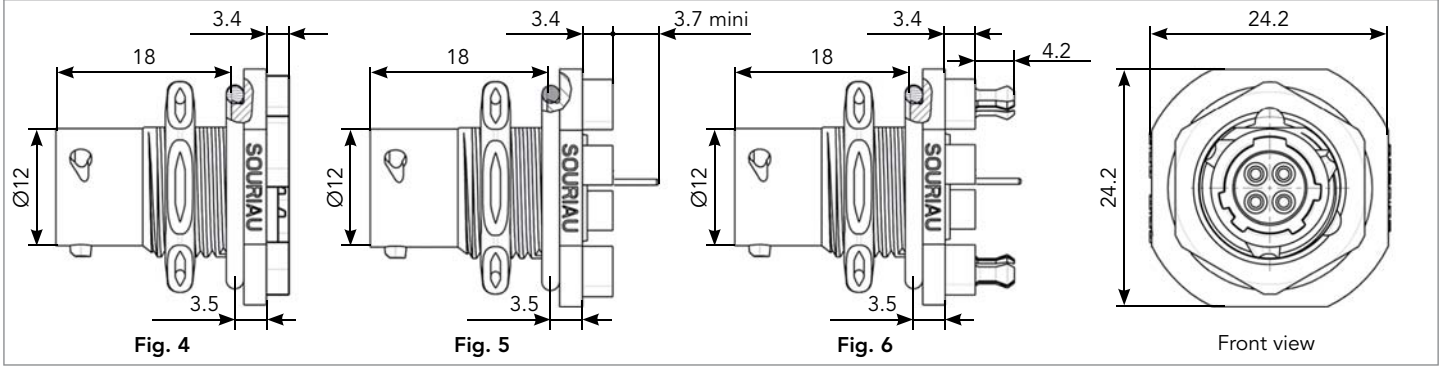

Plug - UTS6

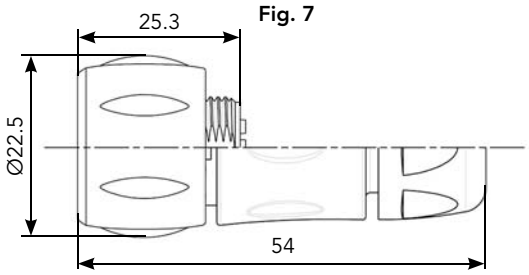

Mated Connector Lengths

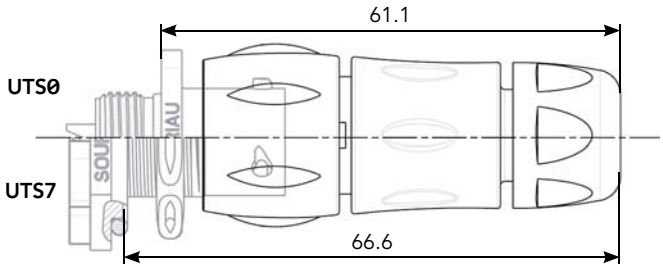

Panel Cut Out

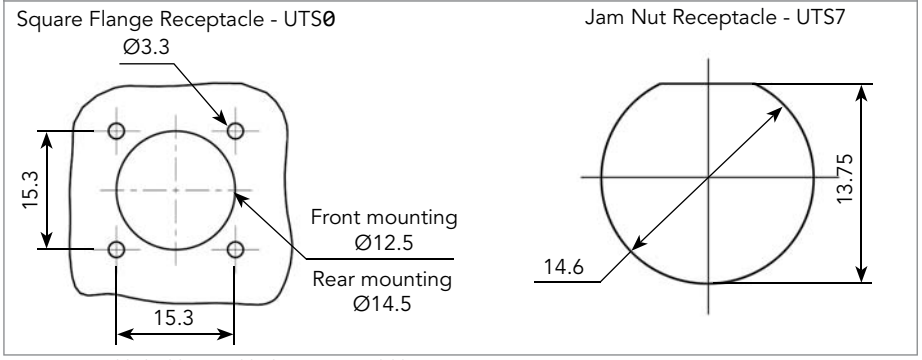

Drilling Pattern

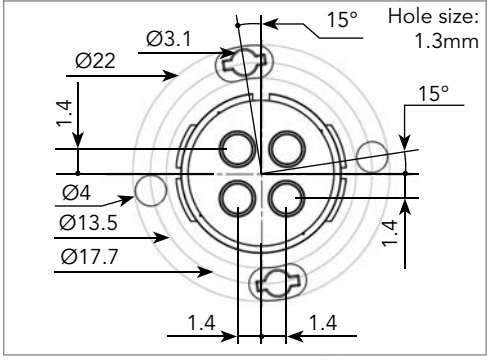

Note: Overmoulded cable assembly dimensions available page 179.

Note: all dimensions are in mm

8E4/8D4 (Shell size 8, 4x#20)

Accessories

Jam Nut Sealing Caps

IP68/69K

Part number
UTS8DCG

IP68/69K Metal terminal

Part number
UTS8DCGR

Square Flange Sealing Cap

IP68/69K Metal terminal

Part number
UTS8DCGE

Plug Protective Cap

IP40

Part number
UTS68C

Plastic Protective Cap

Part numbers	
Receptacle cap	Plug cap
85005585A	85005594

Gasket

Part numbers
UTFD11B

Color Coding Rings

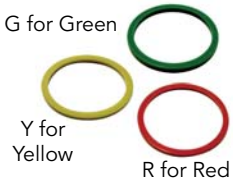

Part numbers	
Receptacles	Plugs
UTS78CCRR	UTS68CCRR
UTS78CCRY	UTS68CCRY
UTS78CCRG	UTS68CCRG

8E4/8D4 (Shell size 8, 4x#20)

Contacts

#20	Contact type	Plating	Cable acceptance (AWG)	Wire stripping length
Handsolder	Loaded in the connector	Min 0.4µ gold over 0.8µ Ni	22 to 18	5 mm
PCB	Machined (1)	Min 0.4µ gold over 0.8µ Ni	-	-

(1): For dimensions see page 169

Electrical Characteristics

UL
7A 250V UL94 HB

CSA
7A 250V UL94 HB

IEC
7A 32V 1.5kV 3

UTS 8E4/8D4 Derating Curves

Test conditions

Contact used:
Machined contacts
Wires used:
0.518mm²

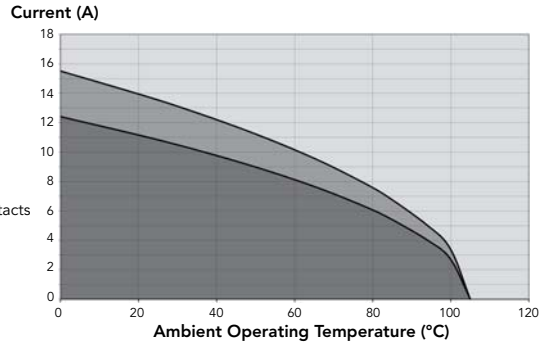

Current use | Limited use | Not recommended use

102W2 (Shell size 10, 2x#20, 2x12)

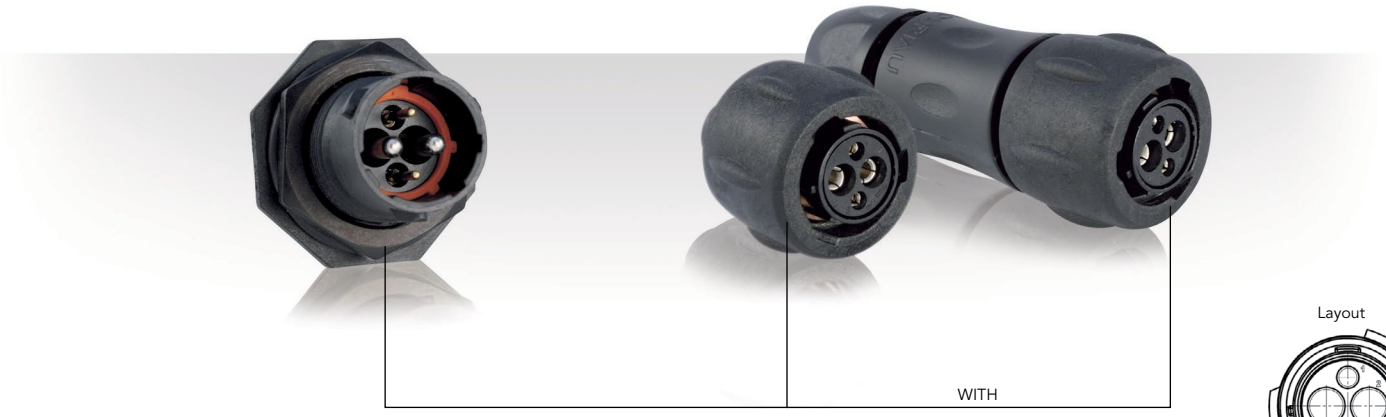

Layout

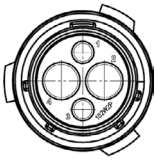

Connector Part Numbers

Contact type	Connector type	Backshell	Part number	
			Male insert	Female insert
Crimp contacts supplied separately see page 67	Free hanging receptacle	Cable gland (Fig. 1)	**UTS1JC102W2P**	**UTS1JC102W2S**
	Plug	Without (Fig. 2)	**UTS6102W2P**	**UTS6102W2S**
	Plug	Cable gland (Fig. 3)	**UTS6JC102W2P**	**UTS6JC102W2S**
	Jam nut receptacle	Without (Fig. 4)	**UTS7102W2P**	**UTS7102W2S**

102W2 (Shell size 10, 2x#20, 2x12)

Dimensions

Free Hanging - UTS1

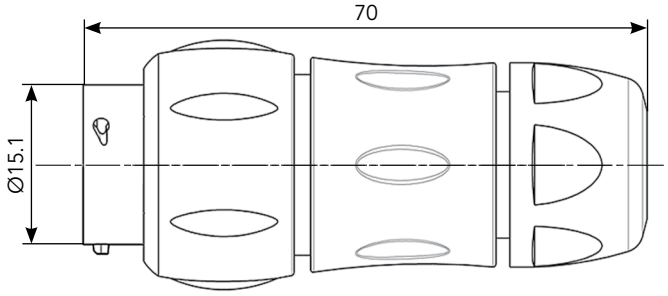

Fig. 1

Plug - UTS6

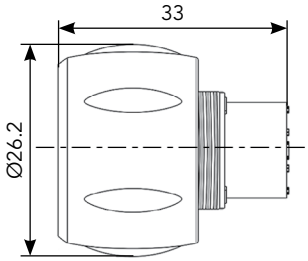

Fig. 2 Male

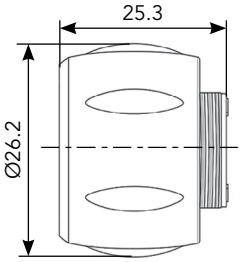

Fig. 2 Female

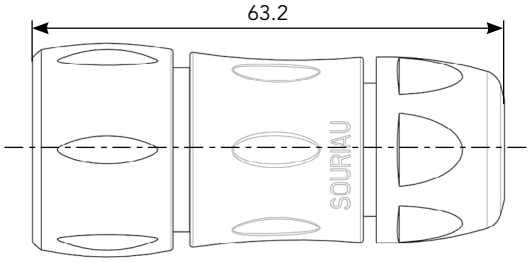

Fig. 3

Jam Nut Receptacle - UTS7

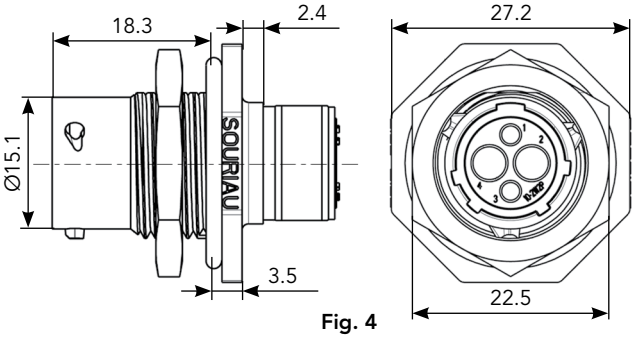

Fig. 4

Mated Connector Length - UTS7

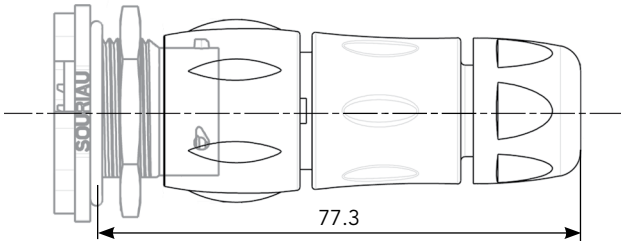

Panel Cut Out

Jam Nut Receptacle - UTS7

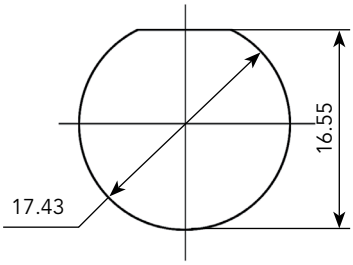

Drilling Pattern

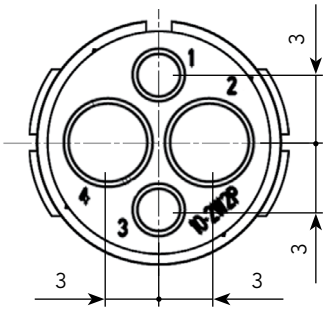

Note: all dimensions are in mm

102W2 (Shell size 10, 2x#20, 2x12)

Accessories and Tooling

Jam Nut Sealing Caps

IP68/69K

Part number
UTS10DCG

IP68/69K Metal terminal

Part number
UTS10DCGR

Plug Sealing Cap

IP68/69K

Part number
UTS610DCG

Extraction Tool #20

Part number
RX20D44

Plastic Protective Cap

Part numbers	
Receptacle cap	Plug cap
85005586A	85005595

Gasket

Part numbers
UTFD12B

Color Coding Rings

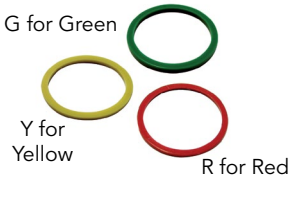

Part numbers	
Receptacles	Plugs
UTS710CCRR	UTS610CCRR
UTS710CCRY	UTS610CCRY
UTS710CCRG	UTS610CCRG

Crimp Tooling #20

Part number
SHANDLES

Part number
TOOLKIT

Contacts	Contact size	Part number of head
RM/RC 24W3K(1)	Standard contacts #20 Ø 1mm	S20RCM*
RM/RC 20W3K(1)		S20RCM*
RM/RC 18W3K(1)		S20RCM*
SM/SC 24WL3(1)(2)		S20SCM20*
SM/SC 20WL3(1)(2)		S20SCM20*

(1): Example of plating, for other plating options see page 156
(2): loose contact
* Heads to be used with handle PN: SHANDLES

Handle

+

Head

=

Complete set

Crimp Tooling #12

Part number hand tool
M317

Part number positioner + locator setting
VGE10078A

Extraction Tool #12

Part number extraction tool
51060210924

102W2 (Shell size 10, 2x#20, 2x12)

Contacts

#20	Contact type	AWG	Part number		Max wire Ø	Max insulator Ø
			Male	Female		
Crimp	Machined	26-24	RM24W3K	RC24W3K	0.80	1.60
		22-20	RM20W3K	RC20W3K	1.15	1.60
		20-18	RM18W3K	RC18W3K	1.30	2.10
	Stamped & Formed reeled contacts See note (2) for loose piece	26-24	SM24W3TK6(1)(2)	SC24W3TK6(1)(2)	-	0.90-1.60
		26-24	SM24W3S26(1)(2)	SC24W3S25(1)(2)	-	0.90-1.60
		22-20	SM20W3TK6(1)(2)	SC20W3TK6(1)(2)	-	1.20-2.10
		22-20	SM20W3S26(1)(2)	SC20W3S25(1)(2)	-	1.20-2.10
#12						
Crimp	Machined	22	82911457NA	82911456A	0.87	4.90
		20	82911459NA	82911458A	1.12	
		18	82911461NA	82911460A	1.42	
		16	82911463NA	82911462A	1.72	
		14	82911465NA	82911464A	2.22	
		12	82911467NA	82911466A	2.82	

(1): Example of plating, for other plating see page 164 (2): Loose piece contact available if putting L. Example: SM20WL3TK6

Note: all dimensions are in mm

4

Electrical Characteristics

UL
20A 500V UL94 V-0

CSA
18A 500V UL94 V-0

IEC
25A 150V 2.5kV 3
Temperature elevation: 50°C

UTS 102W2 Derating Curves

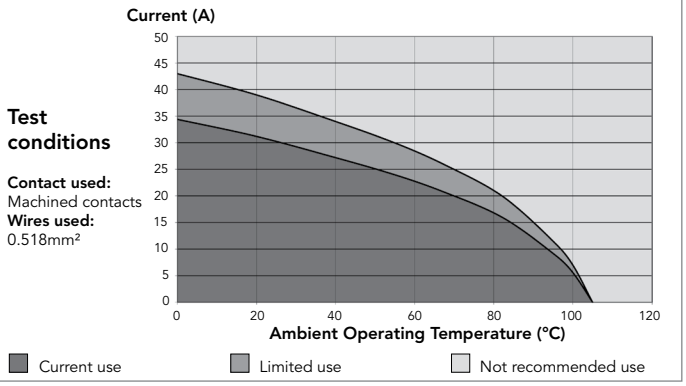

104 (Shell size 10, 4x#16)

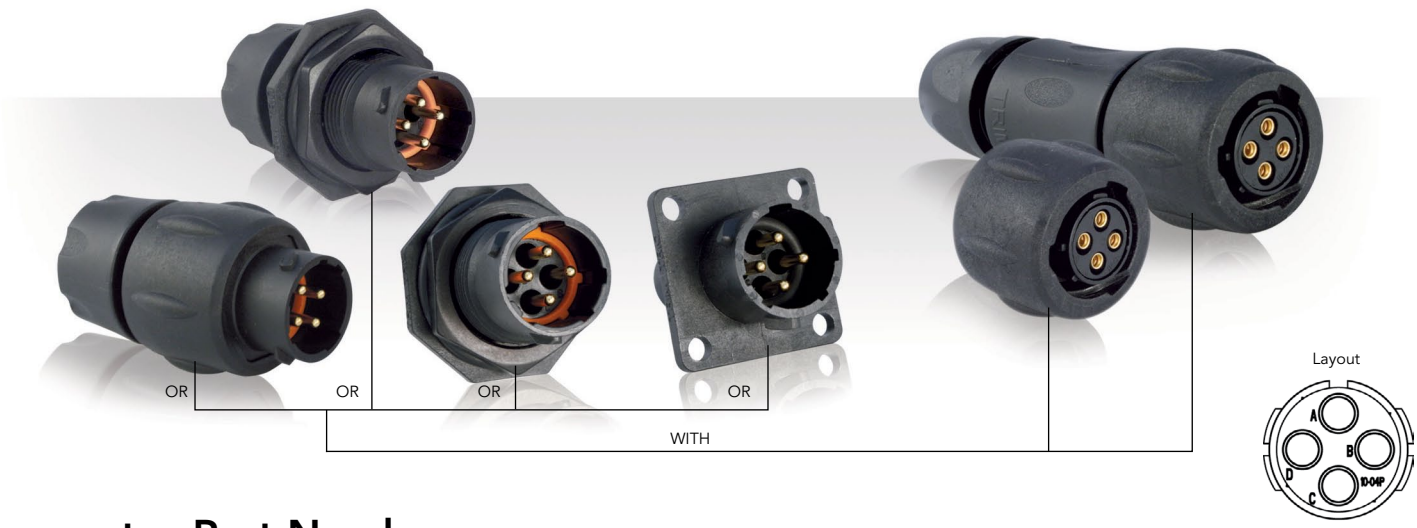

Connector Part Numbers

Contact type	Connector type	Backshell	Part number	
			Male insert	Female insert
Crimp Contact supplied separately see page 71	Square flange receptacle	Without (Fig. 1)	UTS0104P	UTS0104S
	Free hanging receptacle	Cable gland and grommet (Fig. 2)	UTS1GJC104P	-
	Free hanging receptacle	Nut and grommet (Fig. 3)	UTS1GN104P	-
	Free hanging receptacle	Cable gland (Fig. 2)	UTS1JC104P	UTS1JC104S
	Plug	Without (Fig. 4)	UTS6104P	UTS6104S
	Plug	Cable gland and grommet (Fig. 5)	-	UTS6GJC104S
	Plug	Nut and grommet (Fig. 6)	-	UTS6GN104S
	Plug	Cable gland (Fig. 5)	UTS6JC104P	UTS6JC104S
	Jam nut receptacle	Without (Fig. 7)	UTS7104P	UTS7104S
	Jam nut receptacle	Cable gland and grommet (Fig. 9)	UTS7GJC104P	-
	Jam nut receptacle	Nut and grommet (Fig. 8)	UTS7GN104P	-
PCB contacts supplied separately see page 71	Jam nut receptacle	Without (Fig. 7)	UTS7104P	UTS7104S

Possibilities of discrimination/keying methods see page 208

Overmoulded Cable Assembly Part Numbers

Overmoulding type	Connector type	Wire size (mm²)	Harmonized cable part number (1)	Part number (length: 1m.)*	
				Male plug	Female plug
Straight ending	Plug	1.5	H05 VV - F 4x1.5	HAUTS0V104PST100	HAUTS0V104SST100
Right angle ending	Plug	1.5	H05 VV - F 4x1.5	HAUTS0V104PRA100	HAUTS0V104SRA100

(1) Other cable available on demand

* Other lengths available on demand

104 (Shell size 10, 4x#16)

Dimensions

Square Flange Receptacle - UTS0

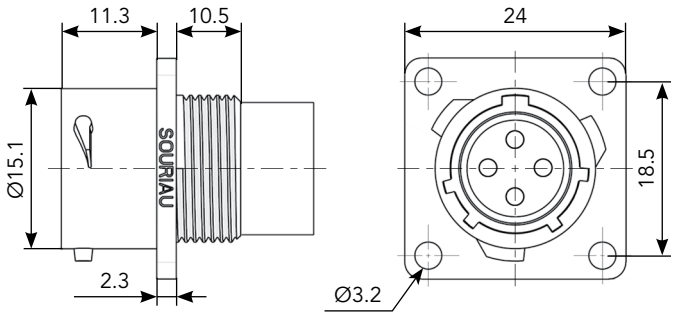

Fig. 1

Free Hanging - UTS1

Fig. 2

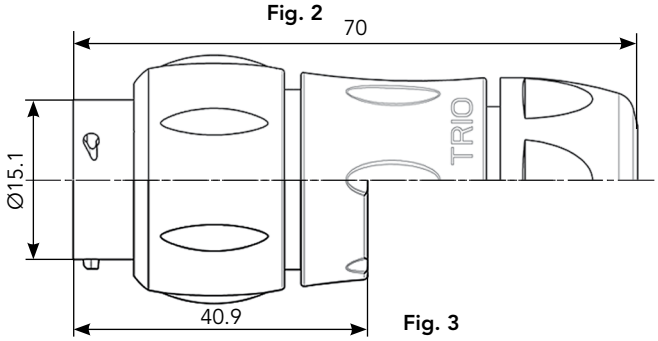

Fig. 3

Plug - UTS6

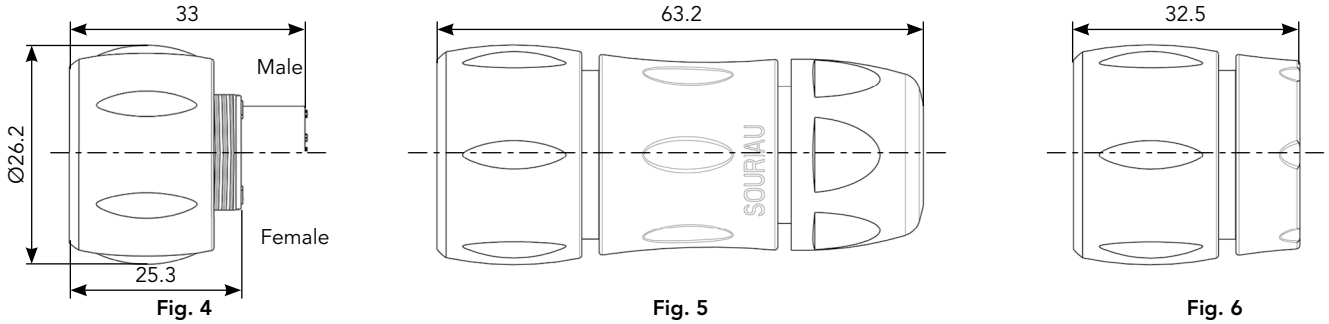

Fig. 4 Fig. 5 Fig. 6

Jam Nut Receptacle - UTS7

Fig. 8

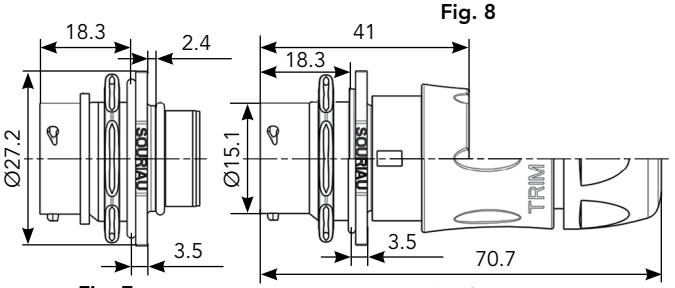

Fig. 7 Fig. 9

Mated Connector Lengths

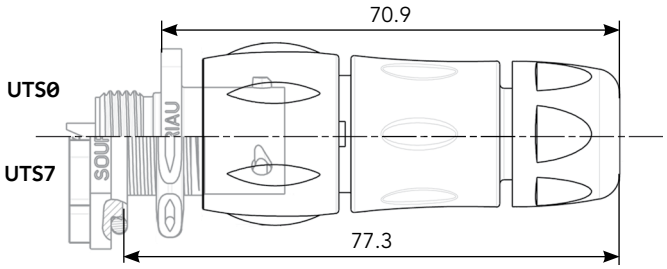

Panel Cut Out

Square Flange Receptacle - UTS0

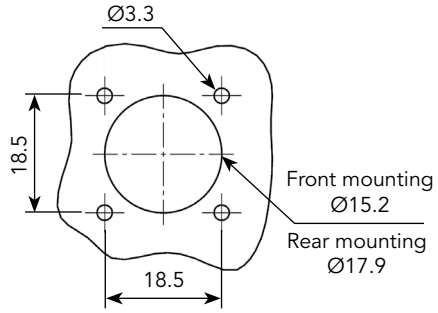

Jam Nut Receptacle - UTS7

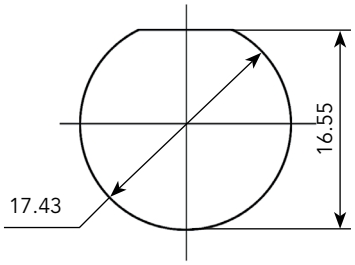

Drilling Pattern

Hole size : 1.3mm

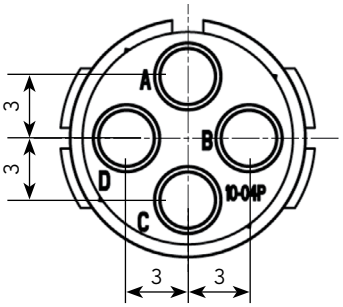

Note: Overmoulded cable assembly dimensions available page 179.

Note: all dimensions are in mm

104 (Shell size 10, 4x#16)

Accessories and Tooling

Jam Nut Sealing Caps

IP68/69K

Part number
UTS10DCG

IP68/69K Metal terminal

Part number
UTS10DCGR

Handle (without Head)

Part number
SHANDLES

Tool Kit

Part number
TOOLKIT

Plug Sealing Cap

IP68/69K

Part number
UTS610DCG

Square Flange Sealing Cap

IP68/69K Metal terminal

Part number
UTS10DCGE

Plastic Protective Cap

Part numbers	
Receptacle cap	Plug cap
85005586A	85005595

Gasket

Part numbers
UTFD12B

Color Coding Rings

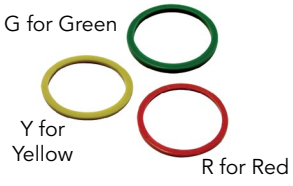

Part numbers	
Receptacles	Plugs
UTS710CCRR	UTS610CCRR
UTS710CCRY	UTS610CCRY
UTS710CCRG	UTS610CCRG

Crimp Tooling (without Shandles)

Contacts	Contact size	Part number of head
RM/RC 28M1K(1)	Standard contacts #16 Ø 1.6mm	S16RCM20*
RM/RC 24M9K(1)		S16RCM20*
RM/RC 20M13K(1)		S16RCM20*
RM/RC 20M12K(1)		S16RCM20*
RM/RC 16M23K(1)		S16RCM16*
RM/RC 14M30K(1)		S16RCM14*
SM/SC 24ML1TK6(1)		S16SCM20*
SM/SC 20ML1TK6(1)		S16SCM20*
SM/SC 16ML1TK6(1)		S16SCML1*
SM/SC 14ML1TK6(1)		S16SCML1*
SM/SC 16ML11TK6(1)		S16SCML11*
RMDXK10D28K	Coaxial contacts	M10S1J with die set & stop bushing see page 200 to 204
RCDXK1D28K		
RM/RC DX60xxD28K		
RM/RC DXK10D28 + york090		
RM/RC DX60xxD28		

(1): Example of plating, for other plating options see page 164
* Heads to be used with handle PN: SHANDLES

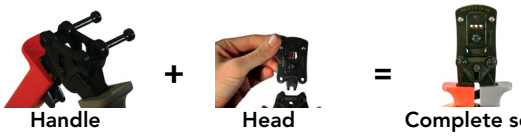

Handle Head Complete set

104 (Shell size 10, 4x#16)

Contacts

#16	Contact type	AWG	Part number		Max wire Ø	Max insulator Ø
			Male	Female		
Crimp	Machined	30-28	RM28M1K(1)	RC28M1K(1)	0.55	1.00
		26-24	RM24M9K(1)	RC24M9K(1)	0.80	1.60
		22-20	RM20M13K(1)	RC20M13K(1)	1.15	1.80
		22-20	RM20M12K(1)	RC20M12K(1)	1.15	2.20
		20-16	RM16M23K(1)	RC16M23K(1)	1.80	3.20
		16-14	RM14M30K(1)	RC14M30K(1)	2.30	3.20
	Stamped & Formed reeled contacts See note (2) for loose piece	26-24	SM24M1TK6(1)(2)	SC24M1TK6(1)(2)	-	0.90-1.60
		22-20	SM20M1TK6(1)(2)	SC20M1TK6(1)(2)	-	1.20-2.10
		18-16	SM16M1TK6(1)(2)	SC16M1TK6(1)(2)	-	3.20
		18-16	SM16M11TK6(1)(2)	SC16M11TK6(1)(2)	-	3.00
		14	SM14M1TK6(1)(2)	SC14M1TK6(1)(2)	-	3.20
PCB	Machined (3)	-	RM20M12E83K(1)	RC20M12E84K(1)	-	-
Coaxial	Cable Multipiece	see pages 167, 200 to 206	RMDXK10D28	RCDXK1D28	-	-
	Cable Monocrimp		RMDX60xxD28	RCDX60xxD28	-	-
	Twisted pair Multipiece		RMDXK10D28 + york090	RCDXK1D28 + york090	-	-
	Twisted pair Monocrimp		RMDX60xxD28	RCDX60xxD28	-	-
Fiber optic	POF contacts (Plastic Optical Fiber)	-	RMPOF1000	RCPOF1000B	-	-

(1): Example of plating, for other plating see page 164 (2): Loose piece contact available if putting L. Example: SM20ML1TK6 (3): For dimensions see page 168 Note: all dimensions are in mm

Electrical Characteristics

UL
10A 500V UL94 V-0

CSA
7A 500V UL94 V-0

IEC
13A 150V 2.5kV 3

UTS 104 Derating Curves

Test conditions

Contact used:
Machined contacts
Wires used:
1.31mm²

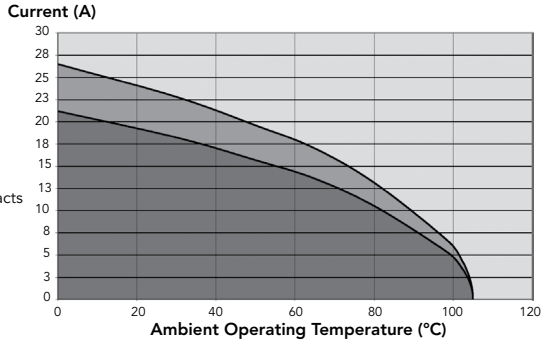

Current use | Limited use | Not recommended use

14E5/14D5 (Shell size 14, 5x#16)

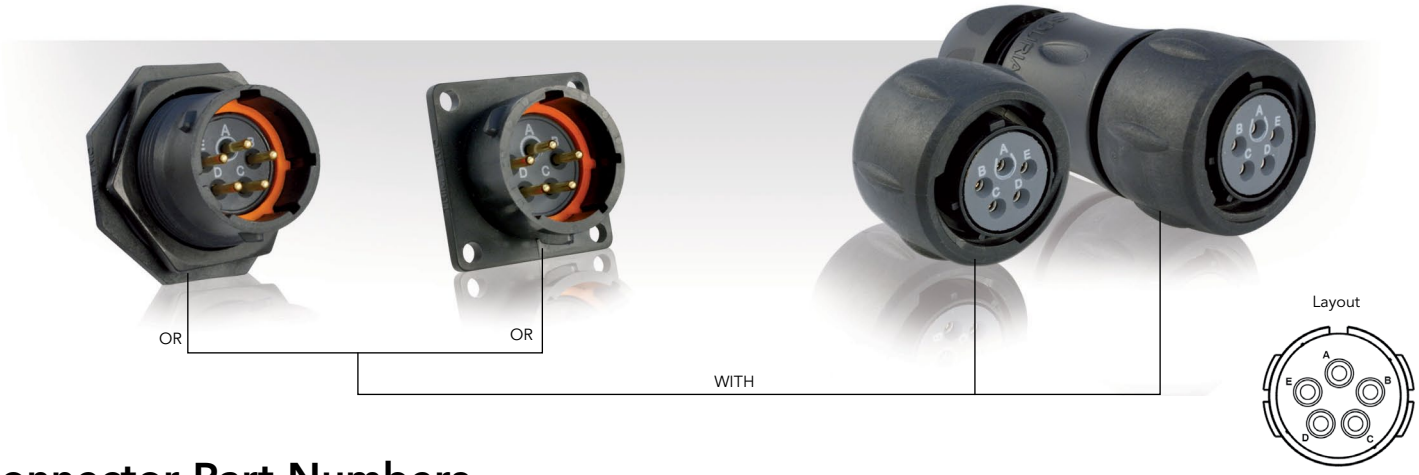

Connector Part Numbers

Contact type	Connector type	Backshell	Part number	
			Male insert	Female insert
Handsolder electrical contacts loaded see page 75	Square flange receptacle	Without (Fig. 6)	UTS014E5P	UTS014E5S
	Plug	Without (Fig. 1)	UTS614E5P	UTS614E5S
		Cable gland (Fig. 2)	UTS6JC14E5P	UTS6JC14E5S
	Jam nut receptacle	Without (Fig. 3)	UTS714E5P	UTS714E5S
PCB contacts loaded see page 75	Square flange receptacle	Without (Fig. 6)	UTS014D5P	UTS014D5S
	Jam nut receptacle with hold down clips	Without (Fig. 4)	UTS714D5P32	UTS714D5S32
	Jam nut receptacle with stand off and without hold down clip	Without (Fig. 5)	UTS714D5P	UTS714D5S

Possibilities of discrimination/keying methods see page 208

Sealed unmated

Overmoulded Cable Assembly Part Numbers

Overmoulding type	Connector type	Wire size (mm²)	Harmonized cable part number (1)	Part number (length: 1m.)*	
				Male plug	Female plug
Straight ending	Plug	1.5	H05 VV - F 5x1.5	HAUTS0V14E5PST100	HAUTS0V14E5SST100
Right angle ending	Plug	1.5	H05 VV - F 5x1.5	HAUTS0V14E5PRA100	HAUTS0V14E5SRA100

(1) Other cable available on demand

* Other lengths available on demand

14E5/14D5 (Shell size 14, 5x#16)

Dimensions

Plug - UTS6

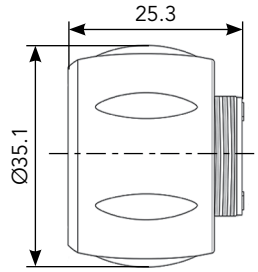

Fig. 1

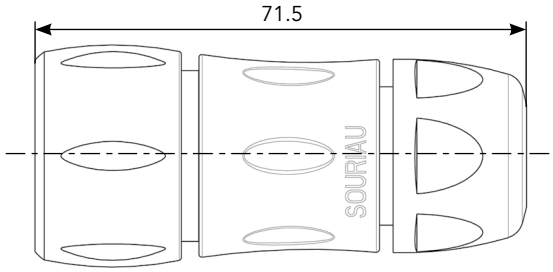

Fig. 2

Jam Nut Receptacle - UTS7

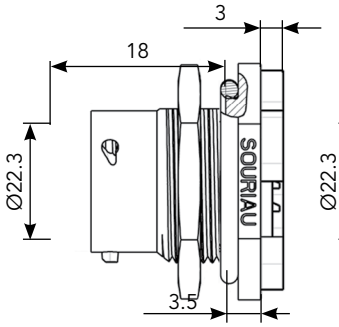

Fig. 3

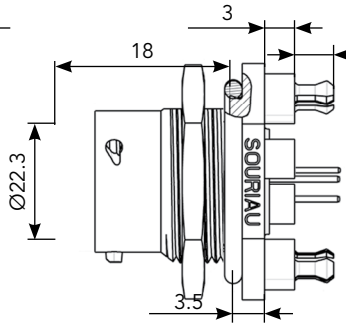

Fig. 4

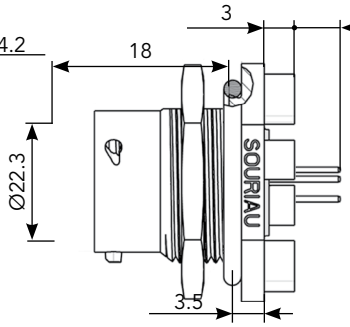

Fig. 5

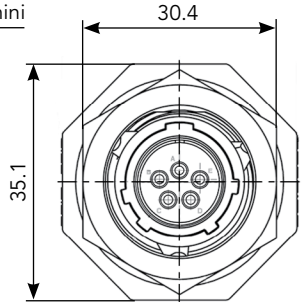

Front view

Square Flange Receptacle - UTS0

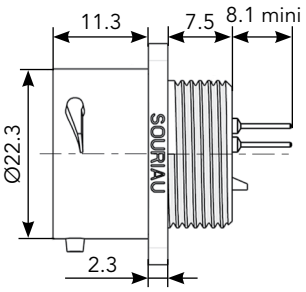

Fig. 6

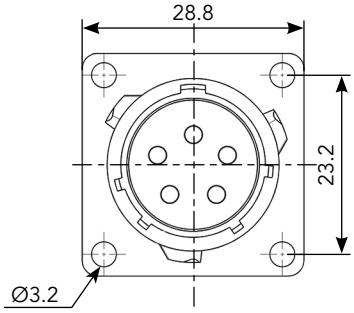

Front view

Mated Connector Lengths

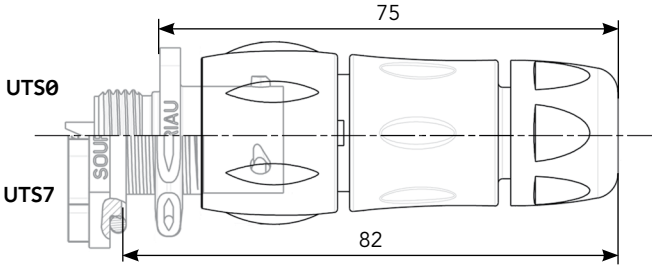

Panel Cut Out

Square Flange Receptacle - UTS0

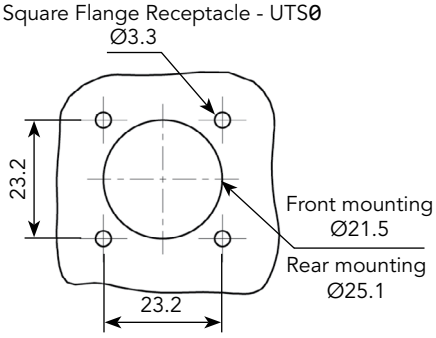

Jam Nut Receptacle - UTS7

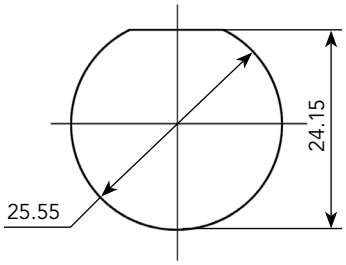

Drilling Pattern

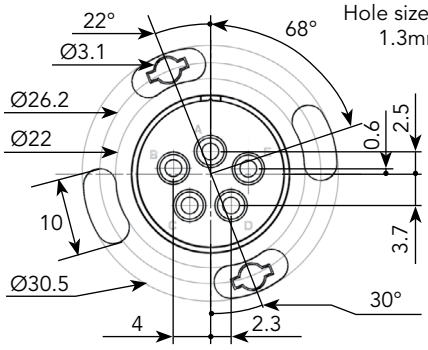

Note: Overmoulded cable assembly dimensions available page 179.

Note: all dimensions are in mm

14E5/14D5 (Shell size 14, 5x#16)

Accessories and Tooling

Jam Nut Sealing Caps

IP68/69K

Part number
UTS14DCG

IP68/69K Metal terminal

Part number
UTS14DCGR

Plug Sealing Cap

IP68/69K

Part number
UTS614DCG

Square Flange Sealing Cap

IP68/69K Metal terminal

Part number
UTS14DCGE

Plastic Protective Cap

Part numbers	
Receptacle cap	Plug cap
85005588A	85005597

Gasket

Part numbers
UTFD14B

Color Coding Rings

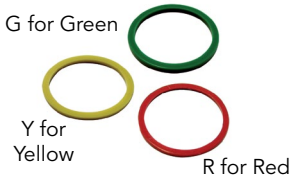

Part numbers	
Receptacles	Plugs
UTS714CCRR	UTS614CCRR
UTS714CCRY	UTS614CCRY
UTS714CCRG	UTS614CCRG

14E5/14D5 (Shell size 14, 5x#16)

Contacts

#16	Contact type	Plating	Cable acceptance (AWG)	Wire stripping length
Handsolder	Loaded in the connector	Min 0.4µ gold over 0.8µ Ni	18 to 14	5 mm
PCB	Machined (1)	Min 0.4µ gold over 0.8µ Ni	-	-

(1): For dimensions see page 169

Electrical Characteristics

UL
12A 600V UL94 HB

CSA
12A 600V UL94 HB

IEC
16A 150V 2.5kV 3

UTS 14E5/14D5 Derating Curves

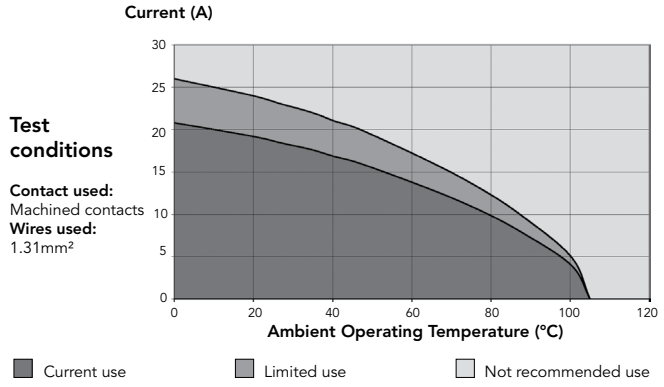

18X2M3 (Shell size 18, 3x#16, 2x#8)

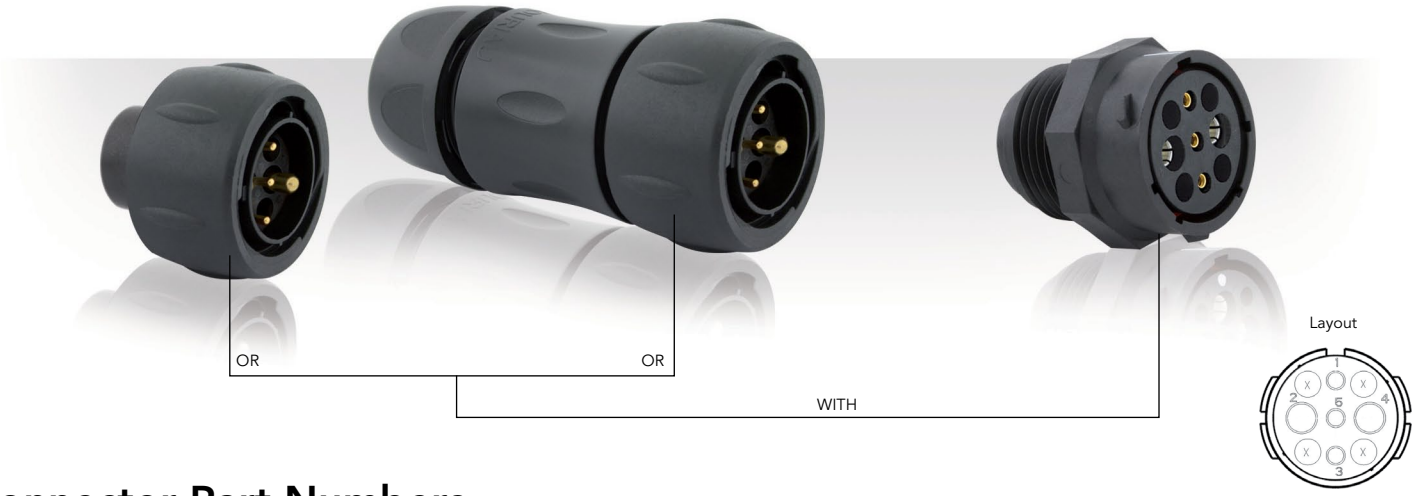

Connector Part Numbers

Contact type	Connector type	Backshell	Part number	
			Male insert	Female insert
Crimp contacts supplied separately see page 79	NPT threaded receptacle	Without (Fig. 1)	**UTS718X2M3PNPT**	**UTS718X2M3SNPT**
	Plug	Without (Fig. 2)	**UTS618X2M3P**	**UTS618X2M3S**
	Plug	Cable gland (Fig. 3)	**UTS6JC18X2M3P**	**UTS6JC18X2M3S**
PCB contacts supplied separately see page 79	NPT threaded receptacle	Without (Fig. 1)	**UTS718X2M3PNPT**	**UTS718X2M3SNPT**

18X2M3 (Shell size 18, 3x#16, 2x#8)

Dimensions

NPT Threaded Receptacle - UTS7

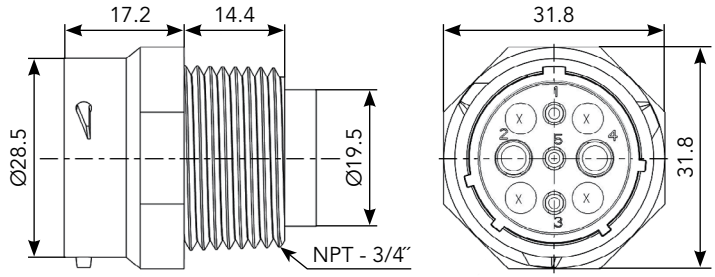

Fig. 1

Plug - UTS6

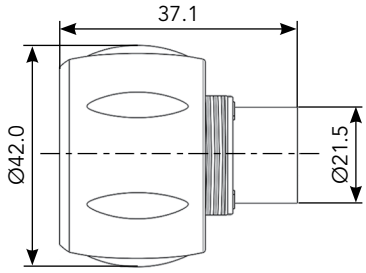

Fig. 2

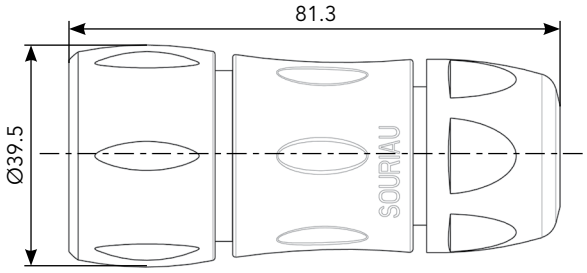

Fig. 3

Mated Connector Length - UTS6JC

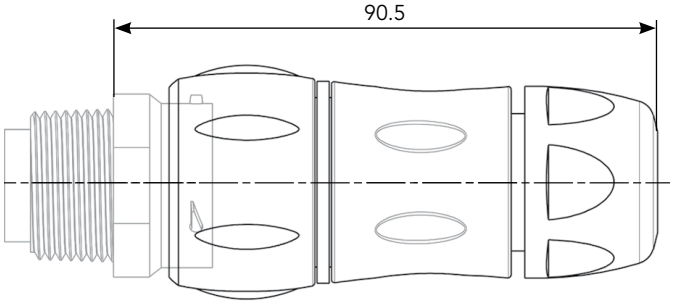

Panel cut

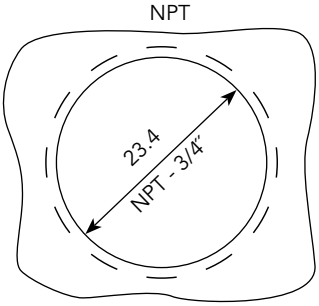

Drilling Pattern

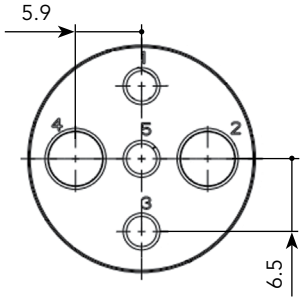

Note: all dimensions are in mm

18X2M3 (Shell size 18, 3x#16, 2x#8)

Accessories and Tooling

Jam Nut or NPT Threaded Receptacle Sealing Caps

IP68/69K

Part number
UTS18DCG

IP68/69K Metal terminal

Part number
UTS18DCGR

Plug Sealing Cap

IP68/69K

Part number
UTS618DCG

Extraction Tool #16

Part number
RX2025GE1

Plastic Protective Cap

Part numbers	
Receptacle cap	Plug cap
85005590A	85005599

Color Coding Rings

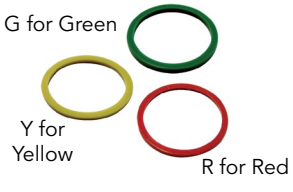

Part numbers	
Receptacles	Plugs
UTS718CCRR	UTS618CCRR
UTS718CCRY	UTS618CCRY
UTS718CCRG	UTS618CCRG

Crimp Tooling #16

Part number
SHANDLES

Part number
TOOLKIT

Contacts	Contact size	Part number of head
RM/RC 28M1K	Standard contacts #16 Ø 1.6mm	S16RCM20*
RM/RC 24M9K		S16RCM20*
RM/RC 20M13K		S16RCM20*
RM/RC 20M12K		S16RCM20*
RM/RC 16M23K		S16RCM16*
RM/RC 14M30K		S16RCM14*
SM/SC 24ML1TK6(1)		S16SCM20*
SM/SC 20ML1TK6(1)		S16SCM20*
SM/SC 16ML1TK6(1)		S16SCML1*
SM/SC 14ML1TK6(1)		S16SCML1*
SM/SC 16ML11TK6(1)		S16SCML11*

(1): Example of plating, for other plating see page 164
*: Heads to be used with handle PN: SHANDLES

Crimp Tooling #8

Part number hand tool
M317

Part number positioner + locator setting
VGE10078A

Extraction Tool #8

Part number extraction tool
51060210936

18X2M3 (Shell size 18, 3x#16, 2x#8)

Contacts

#16	Contact type	Wire size		Part number		Max wire Ø	Max insulator Ø
		AWG	mm²	Male	Female		
Crimp	Machined	30-28	0.50-0.08	RM28M1K	RC28M1K	0.55	1.00
		26-24	0.13-0.25	RM24M9K	RC24M9K	0.80	1.60
		22-20	0.32-0.52	RM20M13K	RC20M13K	1.15	1.80
		22-20	0.32-0.52	RM20M12K	RC20M12K	1.15	2.20
		20-16	0.52-1.50	RM16M23K	RC16M23K	1.80	3.20
		16-14	1.50-2.50	RM14M30K	RC14M30K	2.30	3.20
	Stamped & Formed reeled contacts See note (2) for loose piece	26-24	0.13-0.25	SM24M1TK6(1)(2)	SC24M1TK6(1)(2)	-	0.90-1.60
		22-20	0.32-0.52	SM20M1TK6(1)(2)	SC20M1TK6(1)(2)	-	1.20-2.10
		18-16	0.80-1.50	SM16M1TK6(1)(2)	SC16M1TK6(1)(2)	-	3.20
		18-16	0.80-1.50	SM16M11TK6(1)(2)	SC16M11TK6(1)(2)	-	3.00
		14	2.50	SM14M1TK6(1)(2)	SC14M1TK6(1)(2)	-	3.20
PCB	Machined (3)	-	-	RM20M12E83K(1)	RC20M12E84K(1)	-	-
Coaxial	Cable Multipiece	-	-	RMDXK10D28	RCDXK1D28	-	-
	Cable Monocrimp	-	-	RMDX60xxD28	RCDX60xxD28	-	-
	Twisted pair Multipiece	-	-	RMDXK10D28 + york090	RCDXK1D28 + york090	-	-
	Twisted pair Monocrimp	-	-	RMDX60xxD28	RCDX60xxD28	-	-
Fiber optic	POF contacts (Plastic Optical Fiber)	-	-	RMPOF1000	RCPOF1000B	-	-
#8							
Crimp	Machined	16	1.50	82913601A(1)	82913600A(1)	1.72	6.50
		14	2.50	82913603A(1)	82913602A(1)	2.22	
		12	4.00	82913605A(1)	82913604A(1)	2.82	
		10	6.00	82913607A(1)	82913606A(1)	3.50	
		8	10.00	82913609A(1)	82913608A(1)	4.35	
PCB	Machined (3)	-	-	82911685NPC(1)	82911684NPC(1)	-	-

(1): Example of plating, for other plating see page 164 (2): Loose piece contact available if putting L. Example: SM20ML1TK6 (3): For dimensions see page 168 Note: all dimensions are in mm

Electrical Characteristics

UL
44A 600V UL94 V-0

CSA
34A 600V UL94 V-0

IEC
32A 300V 4kV 3

UTS 18X2M3 Derating Curves

Test conditions

Contact used:
Machined contacts
Wires used:
8.37mm²

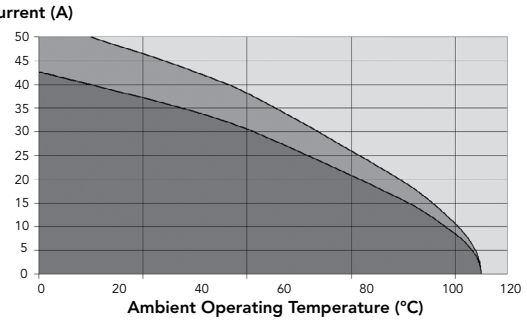

Current use | Limited use | Not recommended use

103W3 (Shell size 10, 3x#20, 3x#16)

Connector Part Numbers

Contact type	Connector type	Backshell	Part number	
			Male insert	Female insert
Crimp contacts supplied separately see page 83	Free hanging receptacle	Cable gland (Fig. 1)	UTS1JC103W3P	UTS1JC103W3S
	Plug	Without (Fig. 2)	UTS6103W3P	UTS6103W3S
	Plug	Cable gland (Fig. 3)	UTS6JC103W3P	UTS6JC103W3S
	Jam nut receptacle	Without (Fig. 4)	UTS7103W3P	UTS7103W3S
PCB contacts supplied separately see page 83	Jam nut receptacle with stand off and without hold down clip	Without (Fig. 4)	UTS7103W3P	UTS7103W3S

103W3 (Shell size 10, 3x#20, 3x#16)

Dimensions

Free Hanging - UTS1

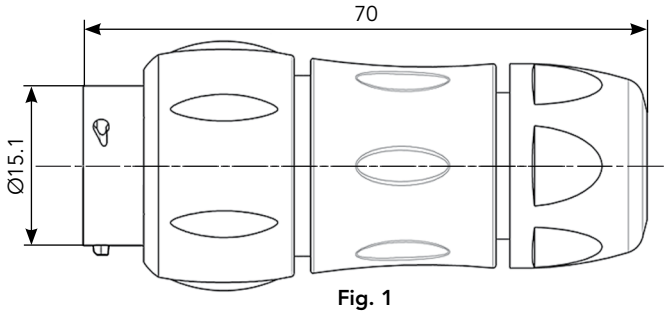

Fig. 1

Plug - UTS6

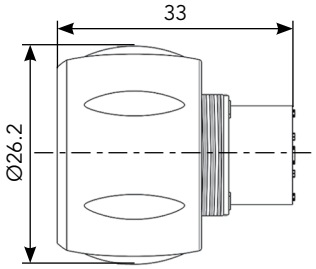

Fig. 2 Male

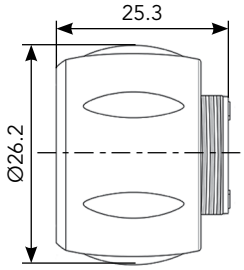

Fig. 2 Female

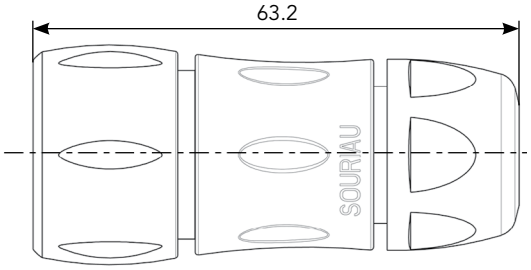

Fig. 3

Jam Nut Receptacle - UTS7

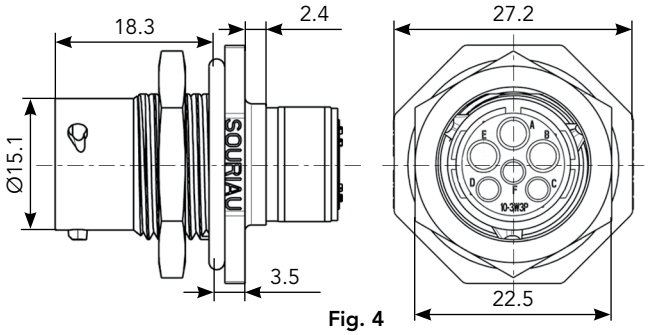

Fig. 4

Mated Connector Length - UTS7

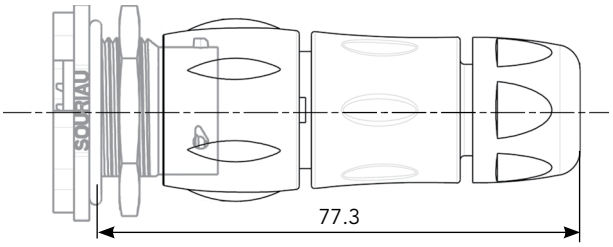

Panel Cut Out

Jam Nut Receptacle - UTS7

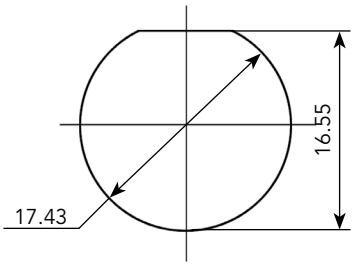

Drilling Pattern

Hole sizes:
#20:0.9mm
#16:1.3mm

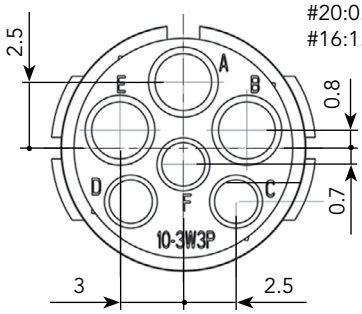

Note: all dimensions are in mm

103W3 (Shell size 10, 3x#20, 3x#16)

Accessories and Tooling

Jam Nut Sealing Caps

IP68/69K

Part number
UTS10DCG

IP68/69K Metal terminal

Part number
UTS10DCGR

Handle

Part number
SHANDLES

Tool Kit

Part number
TOOLKIT

Plug Sealing Cap

IP68/69K

Part number
UTS610DCG

Square Flange Sealing Cap

IP68/69K Metal terminal

Part number
UTS10DCGE

Plastic Protective Cap

Part numbers	
Receptacle cap	Plug cap
85005586A	85005595

Gasket

Part numbers
UTFD12B

Color Coding Rings

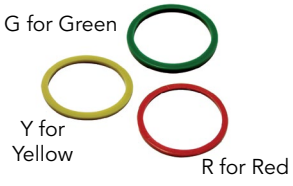

Part numbers	
Receptacles	Plugs
UTS710CCRR	UTS610CCRR
UTS710CCRY	UTS610CCRY
UTS710CCRG	UTS610CCRG

Crimp Tooling

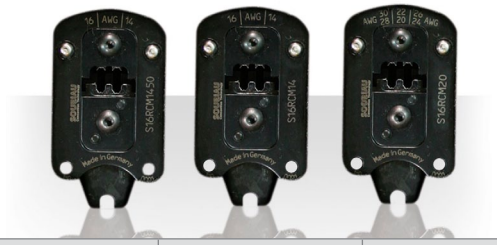

Contacts	Contact size	Part number of head
RM/RC 28M1K	Standard contacts #16 Ø 1.6mm	S16RCM20*
RM/RC 24M9K		S16RCM20*
RM/RC 20M13K		S16RCM20*
RM/RC 20M12K		S16RCM20*
RM/RC 16M23K		S16RCM16*
RM/RC 14M30K		S16RCM14*
SM/SC 24ML1TK6(1)		S16SCM20*
SM/SC 20ML1TK6(1)		S16SCM20*
SM/SC 16ML1TK6(1)		S16SCML1*
SM/SC 14ML1TK6(1)		S16SCML1*
SM/SC 16ML11TK6(1)		S16SCML11*
RMDXK10D28	Coaxial contacts	M10S1J with die set & stop bushing see page 200 to 204
RCDXK1D28		
RMDX60xxD28		
RCDX60xxD28		
RM/RC DXK10D28 + york090		
RM/RC 24W3K(1)	Standard contacts #20 Ø 1mm	S20RCM*
RM/RC 20W3K(1)		S20RCM*
RM/RC 18W3K(1)		S20RCM*
SM/SC 24WL3S		S20SCM20*
SM/SC 20WL3S		S20SCM20*

(1): Example of plating, for other plating see page 164
*: Heads to be used with handle PN: SHANDLES

103W3 (Shell size 10, 3x#20, 3x#16)

Contacts

#16	Contact type	Wire size AWG	Wire size mm²	Part number Male	Part number Female	Max wire Ø	Max insulator Ø
Crimp	Machined	30-28	0.50-0.08	RM28M1K	RC28M1K	0.55	1.00
		26-24	0.13-0.25	RM24M9K	RC24M9K	0.80	1.60
		22-20	0.32-0.52	RM20M13K	RC20M13K	1.15	1.80
		22-20	0.32-0.52	RM20M12K	RC20M12K	1.15	2.20
		20-16	0.52-1.50	RM16M23K	RC16M23K	1.80	3.20
		16-14	1.50-2.50	RM14M30K	RC14M30K	2.30	3.20
	Stamped & Formed reeled contacts See note (2) for loose piece	26-24	0.13-0.25	SM24M1TK6(1)(2)	SC24M1TK6(1)(2)	-	0.90-1.60
		22-20	0.32-0.52	SM20M1TK6(1)(2)	SC20M1TK6(1)(2)	-	1.20-2.10
		18-16	0.80-1.50	SM16M1TK6(1)(2)	SC16M1TK6(1)(2)	-	3.20
		18-16	0.80-1.50	SM16M11TK6(1)(2)	SC16M11TK6(1)(2)	-	3.00
		14	2.50	SM14M1TK6(1)(2)	SC14M1TK6(1)(2)	-	3.20
PCB	Machined (3)	-	-	RM20M12E83K(1)	RC20M12E84K(1)	-	-
Coaxial	Cable Multipiece	-	-	RMDXK10D28	RCDXK1D28	-	-
	Cable Monocrimp	-	-	RMDX60xxD28	RCDX60xxD28	-	-
	Twisted pair Multipiece	-	-	RMDXK10D28 + york090	RCDXK1D28 + york090	-	-
	Twisted pair Monocrimp	-	-	RMDX60xxD28	RCDX60xxD28	-	-
Fiber optic	POF contacts (Plastic Optical Fiber)	-	-	RMPOF1000	RCPOF1000B	-	-
#20							
Crimp	Machined	26-24	0.13-0.25	RM24W3K(1)	RC24W3K(1)	0.80	1.60
		22-20	0.32-0.52	RM20W3K(1)	RC20W3K(1)	1.15	1.60
		20-18	0.50-0.93	RM18W3K(1)	RC18W3K(1)	1.30	2.10
	Stamped & Formed reeled contacts See note (2) for loose piece	26-24	0.13-0.25	SM24W3TK6(2)	SC24W3TK6(2)	-	0.90-1.60
		26-24	0.13-0.25	SM24W3S26(2)	SC24W3S25(2)	-	0.90-1.60
		22-20	0.32-0.52	SM20W3TK6(2)	SC20W3TK65(2)	-	1.20-2.10
		22-20	0.32-0.52	SM20W3S26(2)	SC20W3S25(2)	-	1.20-2.10
PCB	Machined (3)	-	-	RMW5016K	RCW5016K	-	-

(1): Example of plating, for other plating see page 164 (2): Loose piece contact available if putting L. Example: SM20ML1TK6 (3): For dimensions see page 168 Note: all dimensions are in mm

Electrical Characteristics

UL
10A 500V UL94 V-0

CSA
7A 500V UL94 V-0

IEC
5A 32V 1.5kV 3
Temperature elevation: 50°C

UTS 103W3 Derating Curves

Test conditions

Contact used:
Machined contacts
Wires used:
1.31mm²
0.518mm²

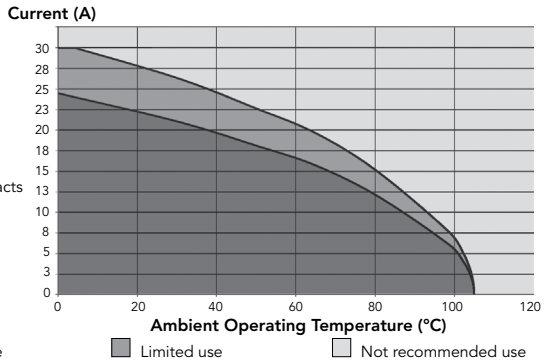

Current use | Limited use | Not recommended use

106 - 10E6/10D6 (Shell size 10, 6x#20)

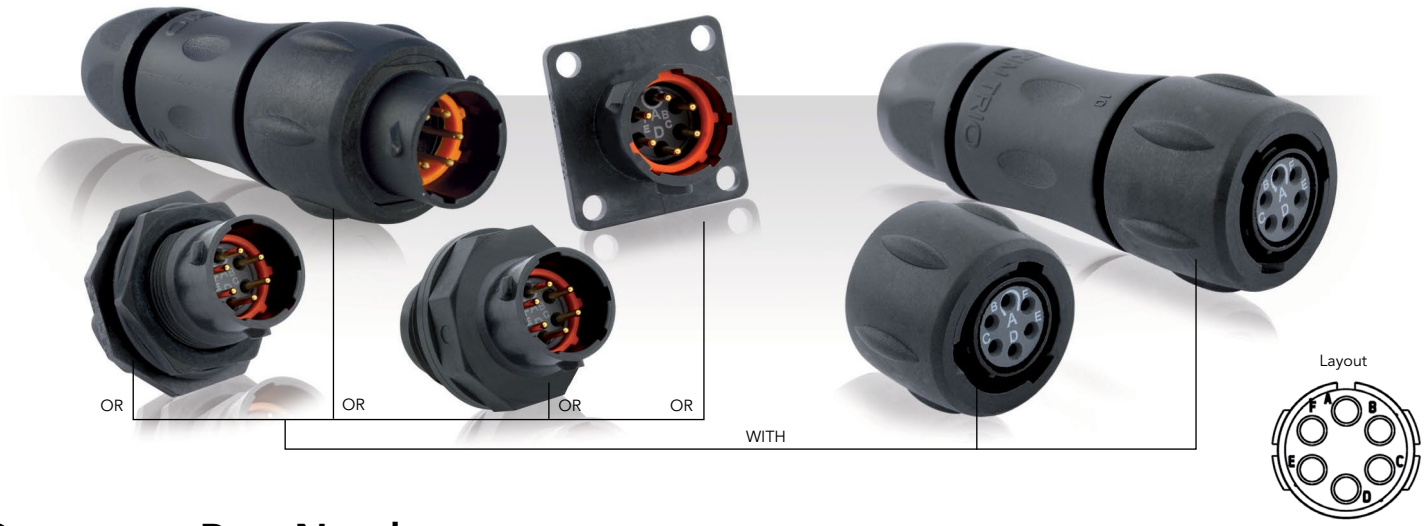

Connector Part Numbers

Contact type	Connector type	Backshell	Part number	
			Male insert	Female insert
Crimp contacts supplied separately see page 87	Free hanging receptacle	Cable gland (Fig. 1)	UTS1JC106P	UTS1JC106S
	Plug	Without (Fig. 2)	UTS6106P	UTS6106S
	Plug	Cable gland (Fig. 3)	UTS6JC106P	UTS6JC106S
	Jam nut receptacle	Without (Fig. 4)	UTS7106P	UTS7106S
PCB contacts supplied separately see page 87	Jam nut receptacle	Without (Fig. 4)	UTS7106P	UTS7106S
Handsolder electrical contacts loaded	Square flange receptacle	Without (Fig. 10)	UTS010E6P	UTS010E6S
	Plug	Without (Fig. 2)	UTS610E6P	UTS610E6S
		Cable gland (Fig. 3)	UTS6JC10E6P	UTS6JC10E6S
	Jam nut receptacle	Without (Fig. 5)	UTS710E6P	UTS710E6S
Handsolder electrical contacts loaded see page 87	M16 threaded receptacle	Without (Fig. 8)	UTS710E6PM16	UTS710E6SM16
PCB contacts supplied separately see page 87	Jam nut receptacle	Without (Fig.4)	UTS7106P	UTS7106S
PCB contacts loaded see page 87	Square flange receptacle	Without (Fig.9)	UTS010D6P	UTS010D6S
	Jam nut receptacle with stand off and with hold down clips	Without (Fig.7)	UTS710D6P32	UTS710D6S32
	Jam nut receptacle with stand off and without hold down clip	Without (Fig.6)	UTS710D6P	UTS710D6S

Possibilities of discrimination/keying methods see page 208

Sealed unmated

Overmoulded Cable Assembly Part Numbers

Overmoulding type	Connector type	Wire size (mm²)	Harmonized cable part number (1)	Part number (length: 1m.)*	
				Male plug	Female plug
Straight ending	Plug	0.5	H05 VV - F 6x0.5	HAUTS0V106PST100	HAUTS0V106SST100
				HAUTS0V10E6PST100	HAUTS0V10E6SST100
Right angle ending	Plug	0.5	H05 VV - F 6x0.5	HAUTS0V106PRA100	HAUTS0V106SRA100
				HAUTS0V10E6PRA100	HAUTS0V10E6SRA100

(1) Other cable available on demand

* Other lengths available on demand

106 - 10E6/10D6 (Shell size 10, 6x#20)

Dimensions

Free Hanging - UTS1

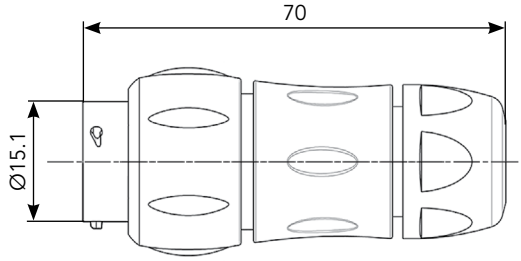

Fig. 1

Plug - UTS6

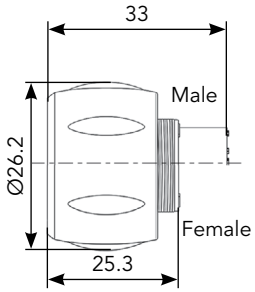

Fig. 2

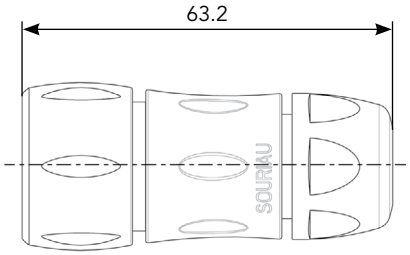

Fig. 3

Jam Nut Receptacle - UTS7

Fig. 4

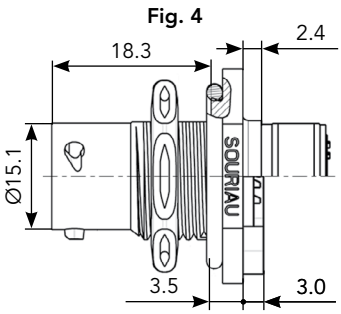

Fig. 5

Fig. 6

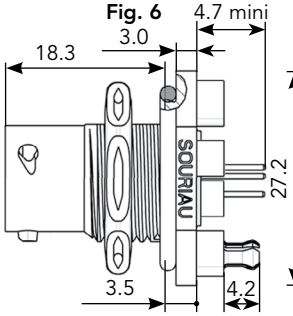

Fig. 7

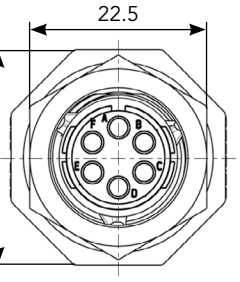

Front view

M16 Threaded Receptacle - UTS7

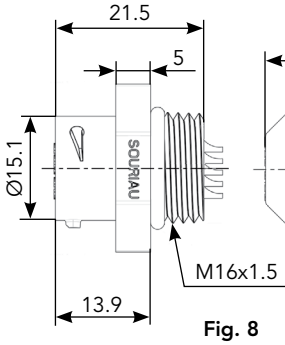

Fig. 8

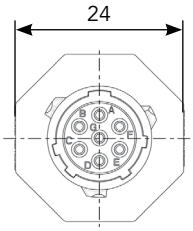

Front view

Square Flange Receptacle - UTS0

Fig. 9

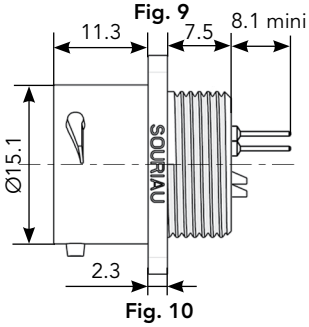

Fig. 10

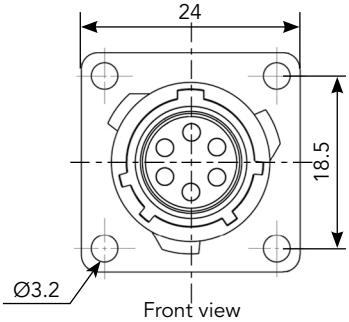

Front view

Mated Connector Lengths

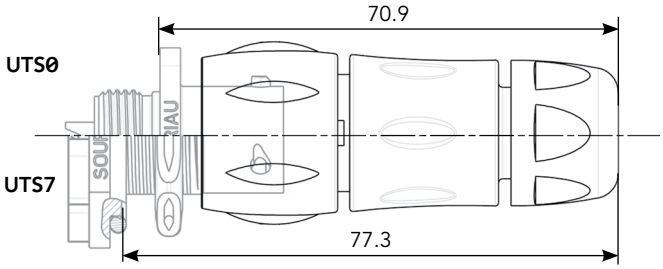

Panel Cut Out

Square Flange Receptacle - UTS0

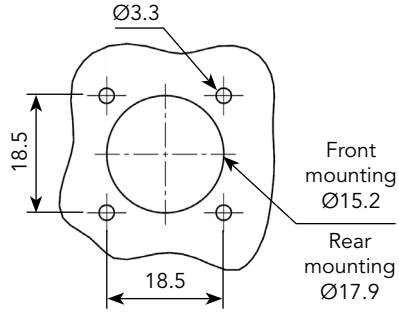

Jam nut receptacle UTS7

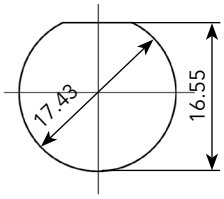

M16

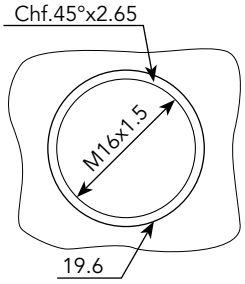

Drilling Pattern

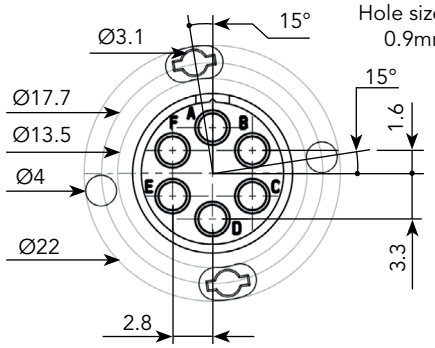

Note: Overmoulded cable assembly dimensions available page 179.

Note: all dimensions are in mm

106 - 10E6/10D6 (Shell size 10, 6x#20)

Accessories and Tooling

Jam Nut Sealing Caps

IP68/69K

Part number
UTS10DCG

IP68/69K Metal terminal

Part number
UTS10DCGR

Handle (without Head)

Part number
SHANDLES

Tool Kit

Part number
TOOLKIT

Plug Sealing Cap

IP68/69K

Part number
UTS610DCG

Square Flange Sealing Cap

IP68/69K Metal terminal

Part number
UTS10DCGE

Crimp Tooling (without Shandles)

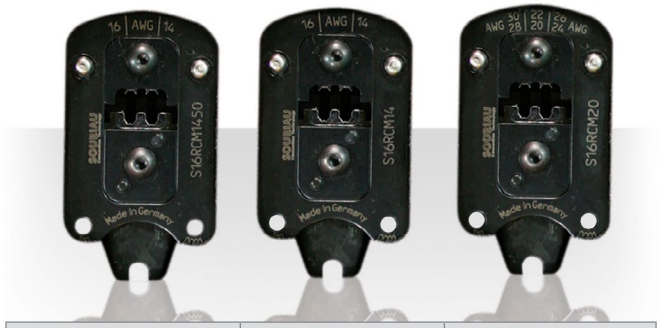

Contacts	Contact size	Part number of head
RM/RC 24W3K(1)	Standard contacts #20 Ø 1mm	S20RCM*
RM/RC 20W3K(1)		S20RCM*
RM/RC 18W3K(1)		S20RCM*
SM/SC 24WL3S		S20SCM20*
SM/SC 20WL3S		S20SCM20*

(1): Example of plating, for other plating see page 164
*: Heads to be used with handle PN: SHANDLES

Handle

+

Head

=

Complete set

Plastic Protective Cap

Part numbers	
Receptacle cap	Plug cap
85005586A	85005595

Gasket

Part numbers
UTFD12B

Color Coding Rings

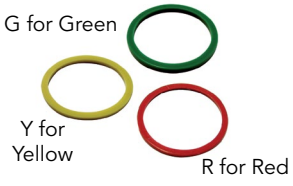

Part numbers	
Receptacles	Plugs
UTS710CCRR	UTS610CCRR
UTS710CCRY	UTS610CCRY
UTS710CCRG	UTS610CCRG

Extraction Tool #20

Part number
RX20D44

106 - 10E6/10D6 (Shell size 10, 6x#20)

Contacts

#20	Contact type	Wire size		Part number		Max wire Ø	Max insulator Ø
		AWG	mm²	Male	Female		
Crimp	Machined	26-24	0.13-0.25	RM24W3K(1)	RC24W3K(1)	0.80	1.60
		22-20	0.32-0.52	RM20W3K(1)	RC20W3K(1)	1.15	1.60
		20-18	0.50-0.93	RM18W3K(1)	RC18W3K(1)	1.30	2.10
	Stamped & Formed reeled contacts See note (2) for loose piece	26-24	0.13-0.25	SM24W3TK6(2)	SC24W3TK6(2)	-	0.90-1.60
		26-24	0.13-0.25	SM24W3S26(2)	SC24W3S25(2)	-	0.90-1.60
		22-20	0.32-0.52	SM20W3TK6(2)	SC20W3TK6(2)	-	1.20-2.10
		22-20	0.32-0.52	SM20W3S26(2)	SC20W3S25(2)	-	1.20-2.10
PCB	Machined (3)	-	-	RMW5016K	RCW5016K	-	-

(1): Example of plating, for other plating see page 164 (2): Loose piece contact available if putting L. Example: SM20WL3TK6 (3): For dimensions see page 168 Note: all dimensions are in mm

#20	Contact type	Plating	Cable acceptance (AWG)	Wire stripping length
Handsolder	Loaded in the connector	Min 0.4µ gold over 0.8µ Ni	22 to 18	3.8 mm

Electrical Characteristics

UTS 106
UL
6A 250V UL94 V-0

UTS 10E6/10D6
UL
6A 250V UL94 HB

CSA
4A 250V UL94 V-0

CSA
6A 250V UL94 HB

IEC
7A 32V 1.5kV 3

UTS 106 - 10E6/10D6 Derating Curves

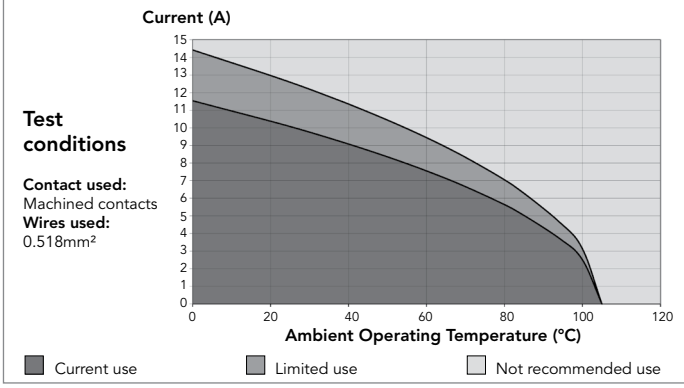

Test conditions

Contact used:
Machined contacts
Wires used:
0.518mm²

10E98/10D98 (Shell size 10, 6x#20)

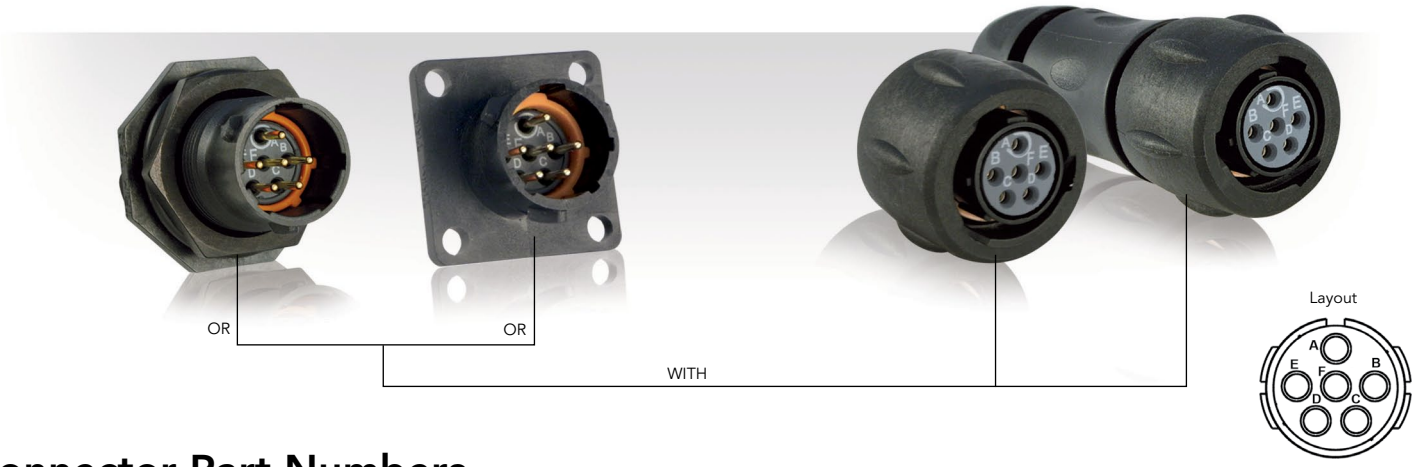

Connector Part Numbers

Contact type	Connector type	Backshell	Part number	
			Male insert	Female insert
Handsolder electrical contacts loaded see page 91	Square flange receptacle	Without (Fig. 6)	UTS010E98P	UTS010E98S
	Plug	Without (Fig. 1)	UTS610E98P	UTS610E98S
		Cable gland (Fig. 2)	UTS6JC10E98P	UTS6JC10E98S
	Jam nut receptacle	Without (Fig. 3)	UTS710E98P	UTS710E98S
PCB contacts loaded see page 91	Square flange receptacle	Without (Fig. 7)	UTS010D98P	UTS010D98S
	Jam nut receptacle with stand off and with hold down clips	Without (Fig. 4)	UTS710D98P32	UTS710D98S32
	Jam nut receptacle with stand off and without hold down clip	Without (Fig. 5)	UTS710D98P	UTS710D98S

Possibilities of discrimination/keying methods see page 208

Sealed unmated

Overmoulded Cable Assembly Part Numbers

Overmoulding type	Connector type	Wire size (mm²)	Harmonized cable part number (1)	Part number (length: 1m.)*	
				Male plug	Female plug
Straight ending	Plug	0.5	H05 VV - F 6x0.5	HAUTS0V10E98PST100	HAUTS0V10E98SST100
Right angle ending	Plug	0.5	H05 VV - F 6x0.5	HAUTS0V10E98PRA100	HAUTS0V10E98SRA100

(1) Other cable available on demand

* Other lengths available on demand

10E98/10D98 (Shell size 10, 6x#20)

Dimensions

Plug - UTS6

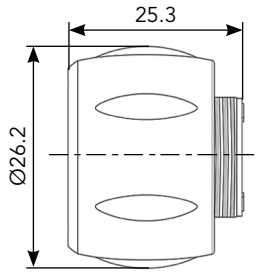

Fig. 1

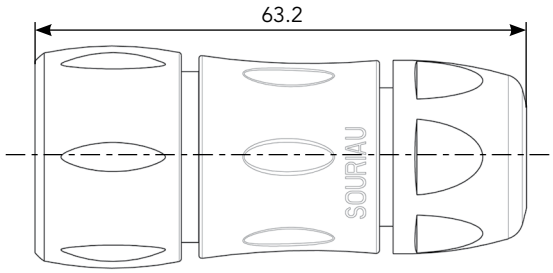

Fig. 2

Jam Nut Receptacle - UTS7

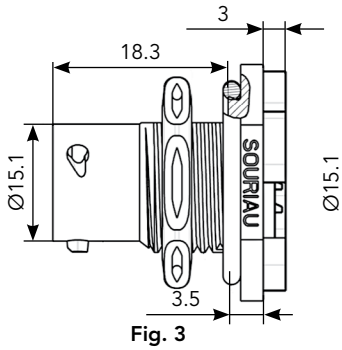

Fig. 3

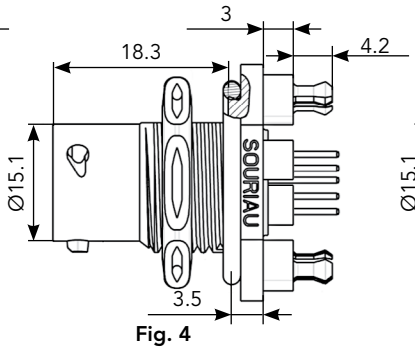

Fig. 4

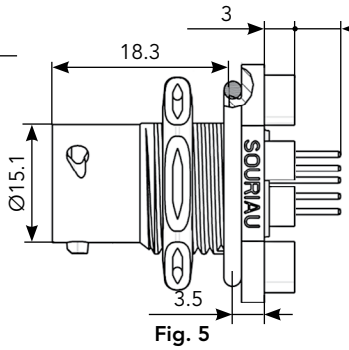

Fig. 5

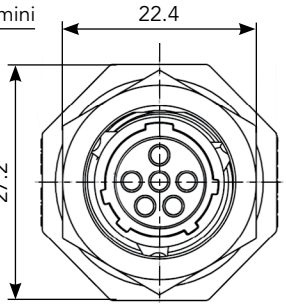

Front view

Square Flange Receptacle - UTS0

Fig. 7

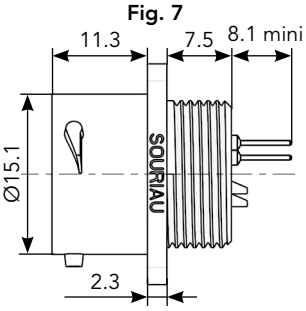

Fig. 6

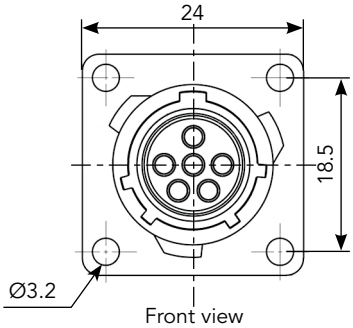

Front view

Mated Connector Lengths

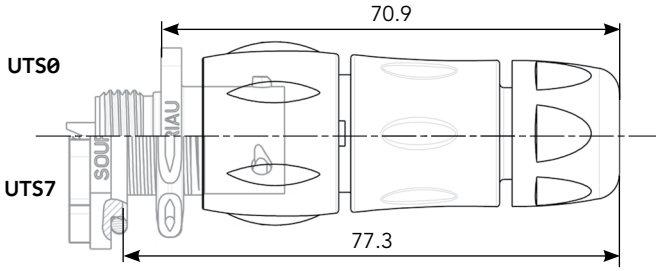

Panel Cut Out

Square Flange Receptacle - UTS0

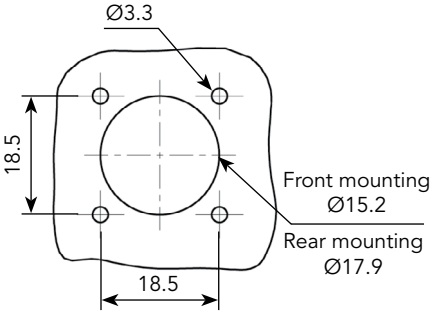

Jam Nut Receptacle - UTS7

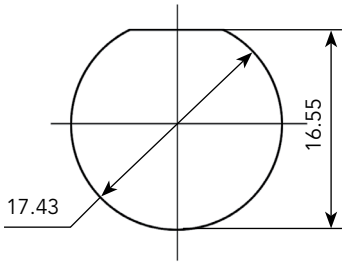

Drilling Pattern

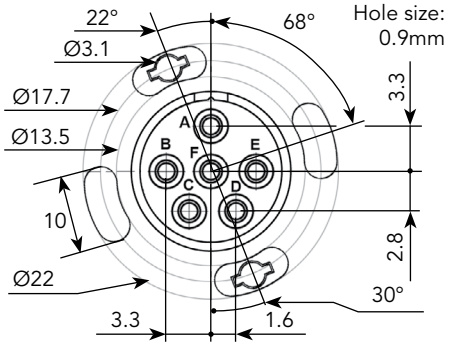

Note: Overmoulded cable assembly dimensions available page 179.

Note: all dimensions are in mm

10E98/10D98 (Shell size 10, 6x#20)

Accessories and Tooling

Jam Nut Sealing Caps

IP68/69K

Part number
UTS10DCG

IP68/69K Metal terminal

Part number
UTS10DCGR

Plug Protective Cap

IP68/69K

Part number
UTS610DCG

Square Flange Sealing Cap

IP68/69K Metal terminal

Part number
UTS10DCGE

Plastic Protective Cap

Part numbers	
Receptacle cap	Plug cap
85005586A	85005595

Gasket

Part numbers
UTFD12B

Color Coding Rings

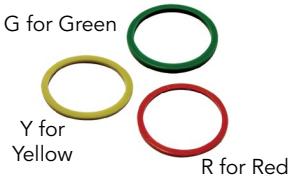

Part numbers	
Receptacles	Plugs
UTS710CCRR	UTS610CCRR
UTS710CCRY	UTS610CCRY
UTS710CCRG	UTS610CCRG

10E98/10D98 (Shell size 10, 6x#20)

Contacts

#20	Contact type	Plating	Cable acceptance (AWG)	Wire stripping length
Handsolder	Loaded in the connector	Min 0.4µ gold over 0.8µ Ni	22 to 18	5 mm
PCB	Machined (1)	Min 0.4µ gold over 0.8µ Ni	-	-

(1): For dimensions see page 169

Electrical Characteristics

UL
6A 250V UL94 HB

CSA
6A 250V UL94 HB

IEC
7A 50V 1.5kV 3

UTS 10E98/10D98 Derating Curves

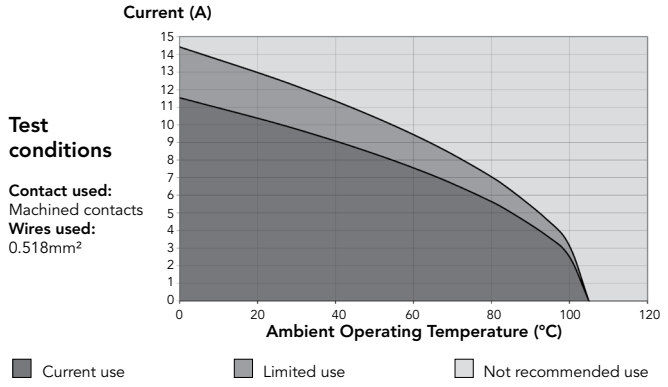

147 - 14E7/14D7 (Shell size 14, 6 + ground, 7x#16)

Layout

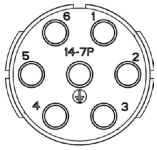

Connector Part Numbers

Contact type	Connector type	Backshell	Part number	
			Male insert	Female insert
Crimp contacts supplied separately see page 95	Square flange receptacle	Without (Fig. 2)	UTS0147P	UTS0147S
	Free hanging receptacle	Cable gland and grommet (Fig. 3)	UTS1GJC147P	-
	Free hanging receptacle	Nut and grommet (Fig. 4)	UTS1GN147P	-
	Free hanging receptacle	Cable gland (Fig. 3)	UTS1JC147P	UTS1JC147S
	Plug	Without (Fig. 5)	UTS6147P	UTS6147S
	Plug	Cable gland and grommet (Fig. 6)	-	UTS6GJC147S
	Plug	Nut and grommet (Fig. 7)	-	UTS6GN147S
	Plug	Cable gland (Fig. 6)	UTS6JC147P	UTS6JC147S
	Jam nut receptacle	Without (Fig. 8)	UTS7147P	UTS7147S
	Jam nut receptacle	Cable gland and grommet (Fig. 10)	UTS7GJC147P	-
	Jam nut receptacle	Nut and grommet (Fig. 9)	UTS7GN147P	-
PCB contacts loaded see page 95	Jam nut receptacle	With stand off and hold down clip (Fig. 11)	UTS7147PSEK9	-
Screw contacts loaded	Jam nut receptacle	Without (Fig. 8)	UTS7147PSCR	UTS7147SSCR
	Free hanging receptacle	Cable gland (Fig. 3)	UTS1JC147PSCR	-
	Plug	Cable gland (Fig. 6)	UTS6JC147PSCR	UTS6JC147SSCR
Handsolder electrical contacts loaded see page 95	Square flange receptacle	Without (Fig. 2)	UTS014E7P	UTS014E7S
	Plug	Cable gland (Fig. 6)	UTS6JC14E7P	UTS6JC14E7S
	Jam nut receptacle	Without (Fig. 8)	UTS714E7P	UTS714E7S
PCB contacts loaded see page 95	Square flange receptacle	Without (Fig. 1)	UTS014D7P	UTS014D7S
	Jam nut receptacle with stand off and hold down clips	Without (Fig. 11)	UTS714D7P32	UTS714D7S32
	Jam nut receptacle with stand off and without hold down clip	Without (Fig. 11)	UTS714D7P	UTS714D7S

Sealed unmated

Overmoulded Cable Assembly Part Numbers

Overmoulding type	Connector type	Wire size (mm²)	Harmonized cable part number (1)	Part number (length: 1m.)*	
				Male plug	Female plug
Straight ending	Plug	1.5	H05 VV - F 7x1.5	HAUTS0V147PST100	HAUTS0V147SST100
				HAUTS0V14E7PST100	HAUTS0V14E7SST100
Right angle ending	Plug	1.5	H05 VV - F 7x1.5	HAUTS0V147PRA100	HAUTS0V147SRA100
				HAUTS0V14E7PRA100	HAUTS0V14E7SRA100

(1) Other cable available on demand

* Other lengths available on demand

147 - 14E7/14D7 (Shell size 14, 6 + ground, 7x#16)

Dimensions

Square Flange Receptacle - UTS0

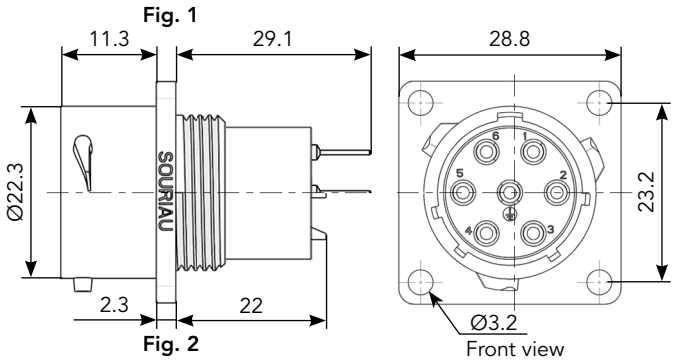

Free Hanging - UTS1

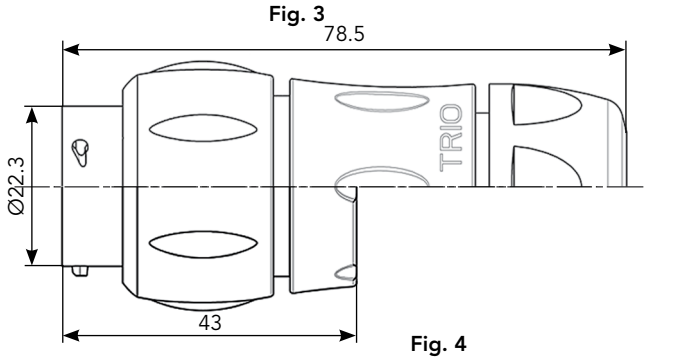

Plug - UTS6

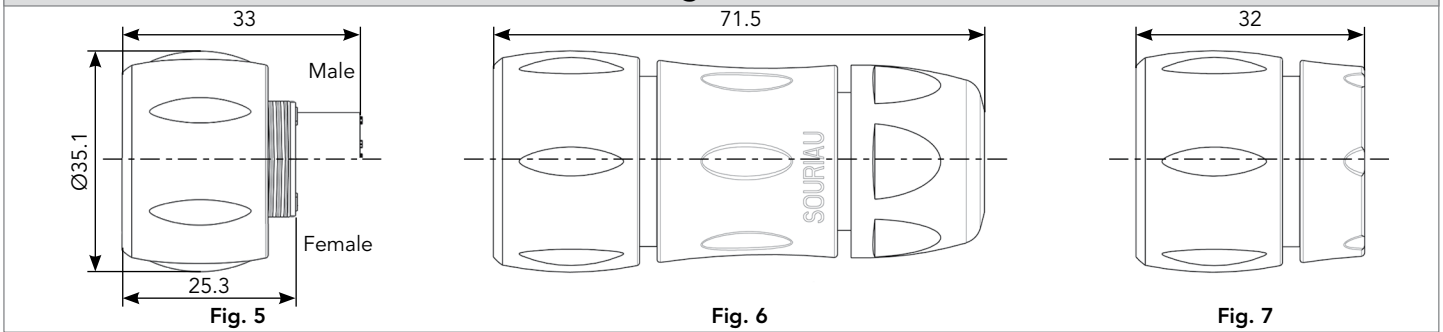

Jam Nut Receptacle - UTS7

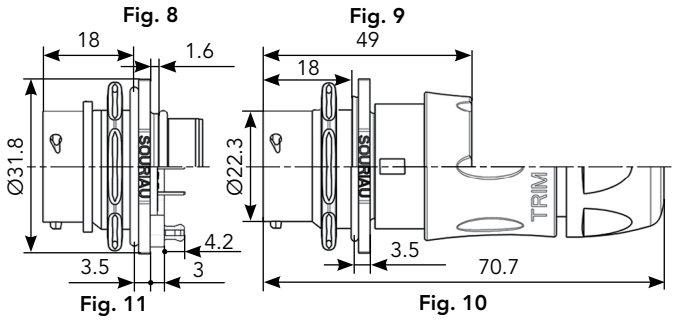

Mated Connector Lengths

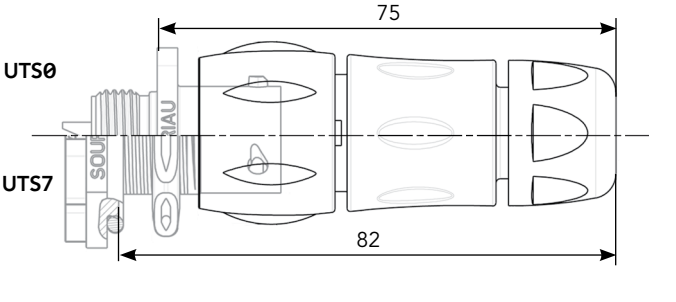

Panel Cut Out

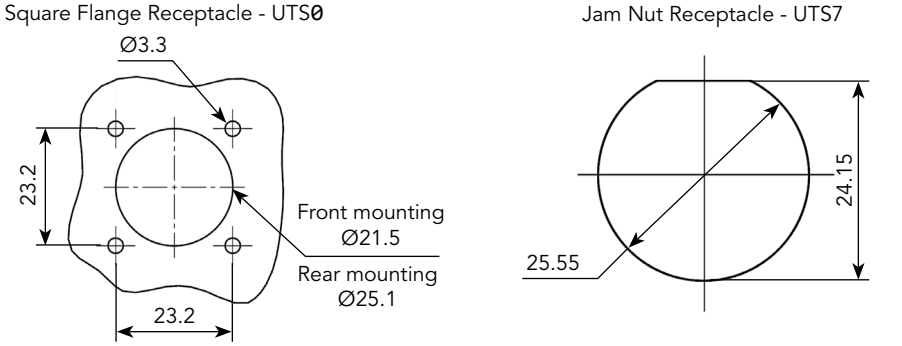

Drilling Pattern

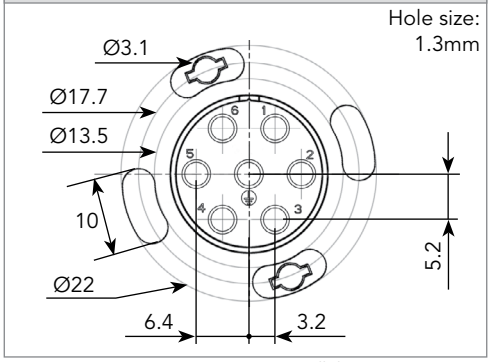

Note: Overmoulded cable assembly dimensions available page 179.

Note: all dimensions are in mm

147 - 14E7/14D7 (Shell size 14, 6 + ground, 7x#16)

Accessories and Tooling

Jam Nut Sealing Caps

IP68/69K

Part number
UTS14DCG

IP68/69K Metal terminal

Part number
UTS14DCGR

Handle (without Head)

Part number
SHANDLES

Tool Kit

Part number
TOOLKIT

Plug Sealing Cap

IP68/69K

Part number
UTS614DCG

Square Flange Sealing Cap

IP68/69K Metal terminal

Part number
UTS14DCGE

Plastic Protective Cap

Part numbers	
Receptacle cap	Plug cap
85005588A	85005597

Gasket

Part numbers
UTFD14B

Color Coding Rings

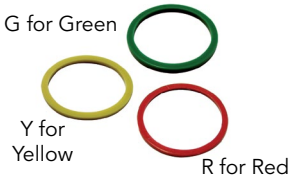

Part numbers	
Receptacles	Plugs
UTS714CCRR	UTS614CCRR
UTS714CCRY	UTS614CCRY
UTS714CCRG	UTS614CCRG

Crimp Tooling (without Shandles)

Contacts	Contact size	Part number of head
RM/RC 28M1K(1)	Standard contacts #16 Ø 1.6mm	S16RCM20*
RM/RC 24M9K(1)		S16RCM20*
RM/RC 20M13K(1)		S16RCM20*
RM/RC 20M12K(1)		S16RCM20*
RM/RC 16M23K(1)		S16RCM16*
RM/RC 14M30K(1)		S16RCM14*
SM/SC 24ML1TK6(1)		S16SCM20*
SM/SC 20ML1TK6(1)		S16SCM20*
SM/SC 16ML1TK6(1)		S16SCML1*
SM/SC 14ML1TK6(1)		S16SCML1*
SM/SC 16ML11TK6(1)		S16SCML11*
RMDXK10D28K	Coaxial contacts	M10S1J with die set & stop bushing see page 200 to 204
RCDXK1D28K		
RM/RC DX60xxD28K		
RM/RC DXK10D28 + york090		
RM/RC DX60xxD28		

(1): Example of plating, for other plating options see page 164
* Heads to be used with handle PN: SHANDLES

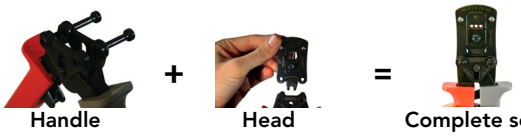

147 - 14E7/14D7 (Shell size 14, 6 + ground, 7x#16)

Contacts

#16	Contact type	AWG	Part number		Max wire Ø	Max insulator Ø
			Male	Female		
Crimp	Machined	30-28	RM28M1K(1)	RC28M1K(1)	0.55	1.00
		26-24	RM24M9K(1)	RC24M9K(1)	0.80	1.60
		22-20	RM20M13K(1)	RC20M13K(1)	1.15	1.80
		22-20	RM20M12K(1)	RC20M12K(1)	1.15	2.20
		20-16	RM16M23K(1)	RC16M23K(1)	1.80	3.20
		16-14	RM14M30K(1)	RC14M30K(1)	2.30	3.20
	Stamped & Formed reeled contacts See note (2) for loose piece	26-24	SM24M1TK6(1)(2)	SC24M1TK6(1)(2)	-	0.90-1.60
		22-20	SM20M1TK6(1)(2)	SC20M1TK6(1)(2)	-	1.20-2.10
		18-16	SM16M1TK6(1)(2)	SC16M1TK6(1)(2)	-	3.20
		18-16	SM16M11TK6(1)(2)	SC16M11TK6(1)(2)	-	3.00
		14	SM14M1TK6(1)(2)	SC14M1TK6(1)(2)	-	3.20
PCB	Machined (3)	-	RM20M12E83K(1)	RC20M12E84K(1)	-	-
Coaxial	Cable Multipiece	see pages 167, 200 to 206	RMDXK10D28	RCDXK1D28	-	-
	Cable Monocrimp		RMDX60xxD28	RCDX60xxD28	-	-
	Twisted pair Multipiece		RMDXK10D28 + york090	RCDXK1D28 + york090	-	-
	Twisted pair Monocrimp		RMDX60xxD28	RCDX60xxD28	-	-
Fiber optic	POF contacts (Plastic Optical Fiber)	-	RMPOF1000	RCPOF1000B	-	-
Hand-solder	Loaded in the connector	14-18	-	-	-	-

(1): Example of plating, for other plating see page 164 (2): Loose piece contact available if putting L. Example: SM20ML1TK6 (3): For dimensions see page 168 Note: all dimensions are in mm

6 +

Electrical Characteristics

UL
10A 500V UL94 V-0

CSA
7A 500V UL94 V-0

IEC
16A 300V 4kV 3
Temperature elevation: 50°C

UTS 147 - 14E7/14D7 Derating Curves

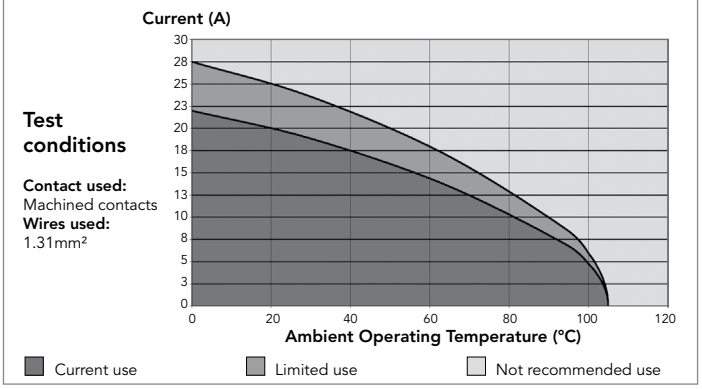

10E7/10D7 (Shell size 10, 7x#20)

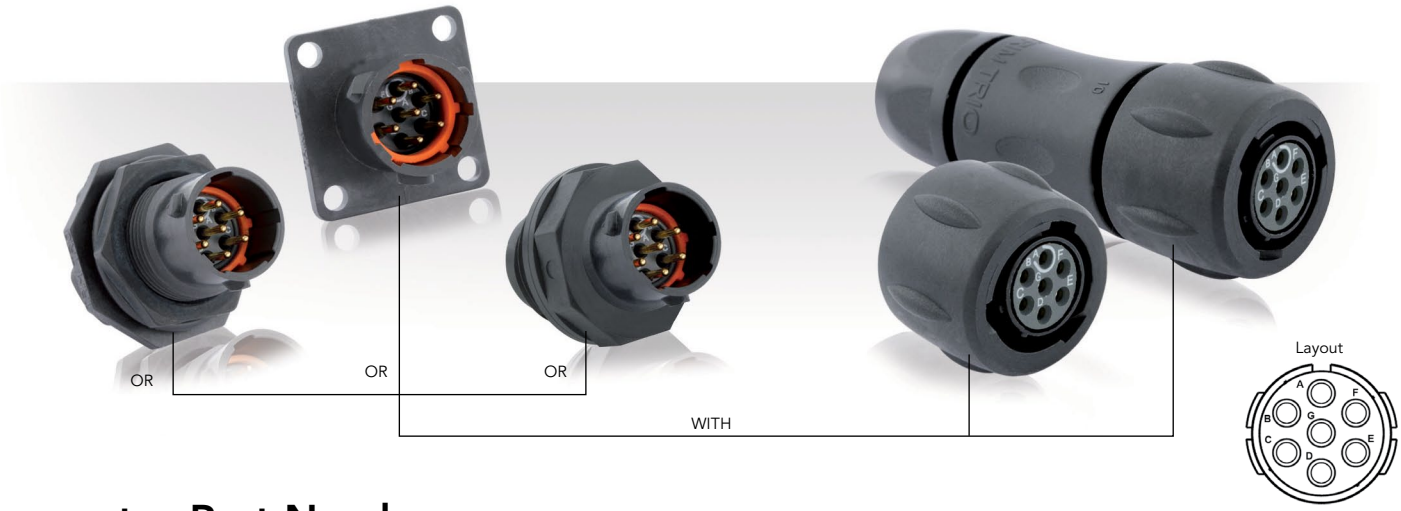

Connector Part Numbers

Contact type	Connector type	Backshell	Part number	
			Male insert	Female insert
Handsolder electrical contacts loaded see page 99	Square flange receptacle	Without (Fig. 1)	UTS010E7P	UTS010E7S
	Plug	Without (Fig. 2)	UTS610E7P	UTS610E7S
		Cable gland (Fig. 3)	UTS6JC10E7P	UTS6JC10E7S
	Jam nut receptacle	Without (Fig. 4)	UTS710E7P	UTS710E7S
	M16 threaded receptacle	Without (Fig. 5)	UTS710E7PM16	UTS710E7SM16

Possibilities of discrimination/keying methods see page 208

Sealed unmated

Overmoulded Cable Assembly Part Numbers

Overmoulding type	Connector type	Wire size (mm²)	Harmonized cable part number (1)	Part number (length: 1m.)*	
				Male plug	Female plug
Straight ending	Plug	0.5	H05 VV - F 7x0.5	HAUTS0V10E7PST100	HAUTS0V10E7SST100
Right angle ending	Plug	0.5	H05 VV - F 7x0.5	HAUTS0V10E7PRA100	HAUTS0V10E7SRA100

(1) Other cable available on demand

* Other lengths available on demand

10E7/10D7 (Shell size 10, 7x#20)

Dimensions

Square Flange Receptacle - UTS0

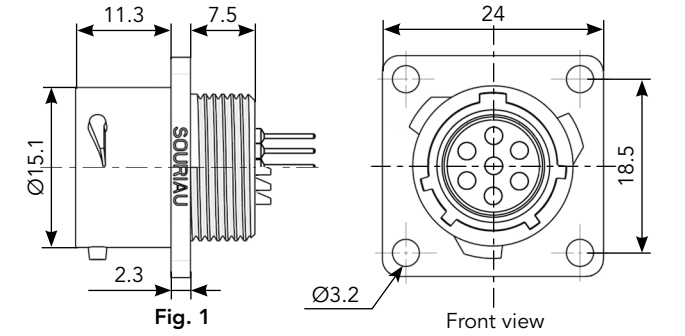

Fig. 1

Plug - UTS6

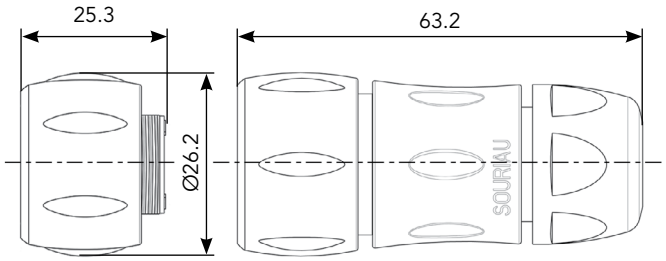

Fig. 2 Fig. 3

Jam Nut Receptacle - UTS7

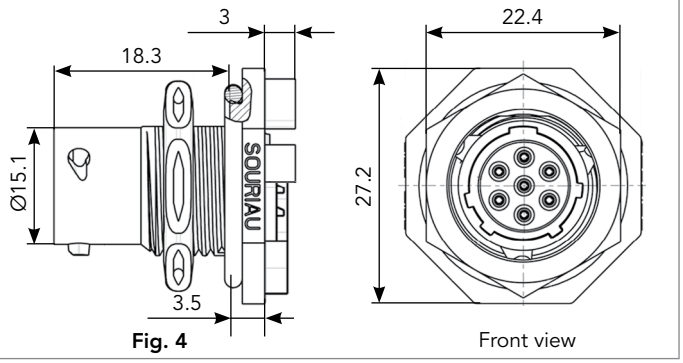

Fig. 4

Mated Connector Lengths

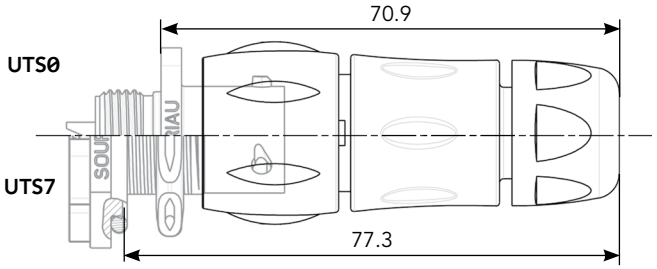

M16 Threaded Receptacle - UTS7

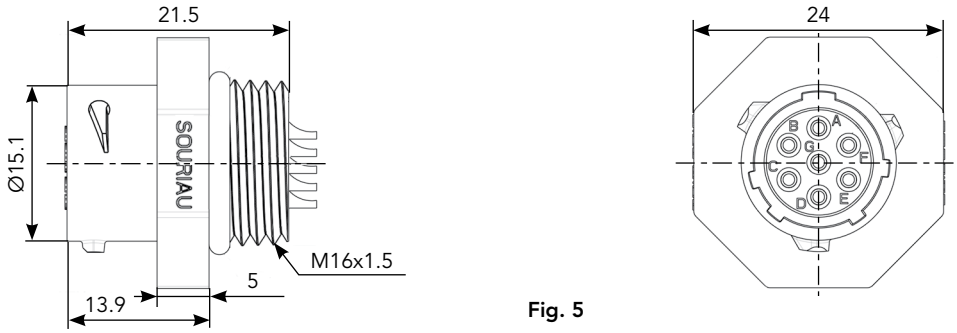

Fig. 5

Panel Cut Out

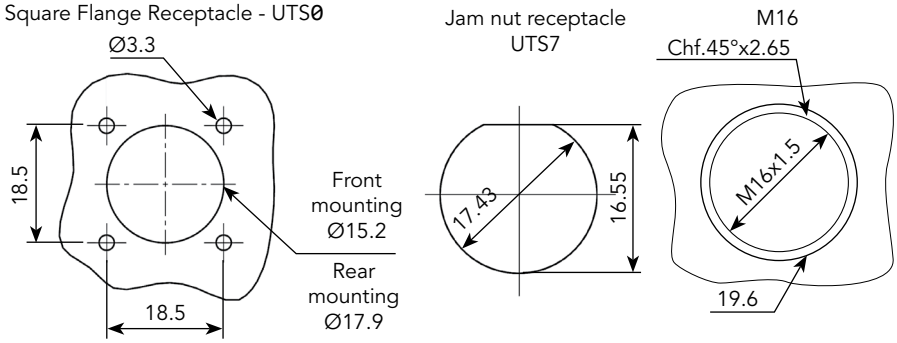

Drilling Pattern

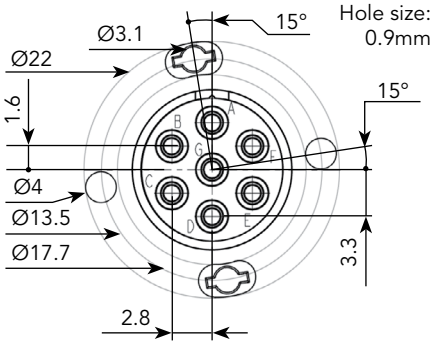

Note: Overmoulded cable assembly dimensions available page 179.

Note: all dimensions are in mm

10E7/10D7 (Shell size 10, 7x#20)

Accessories and Tooling

Jam Nut Sealing Caps

IP68/69K

Part number
UTS10DCG

IP68/69K Metal terminal

Part number
UTS10DCGR

Plug Sealing Cap

IP68/69K

Part number
UTS610DCG

Square Flange Sealing Cap

IP68/69K Metal terminal

Part number
UTS10DCGE

Plastic Protective Cap

Part numbers	
Receptacle cap	Plug cap
85005586A	85005595

Gasket

Part numbers
UTFD12B

Color Coding Rings

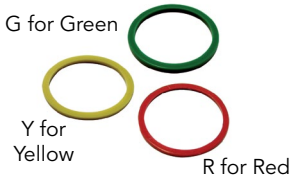

Part numbers	
Receptacles	Plugs
UTS710CCRR	UTS610CCRR
UTS710CCRY	UTS610CCRY
UTS710CCRG	UTS610CCRG

10E7/10D7 (Shell size 10, 7x#20)

Contacts

#20	Contact type	Plating	Cable acceptance (AWG)	Wire stripping length
Handsolder	Loaded in the connector	Min 0.4µ gold over 0.8µ Ni	22 to 18	3.8 mm

Electrical Characteristics

UL
6A 250V UL94 HB

CSA
6A 250V UL94 HB

IEC
7A 50V 1.5kV 3

UTS 10E7/10D7 Derating Curves

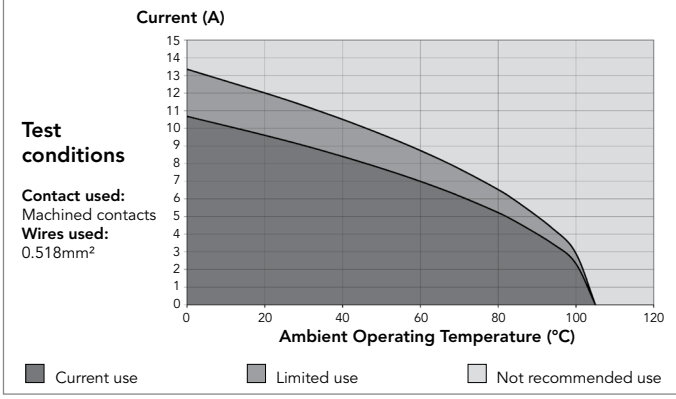

128 (Shell size 12, 8x#16)

Connector Part Numbers

Contact type	Connector type	Backshell	Part number	
			Male insert	Female insert
Crimp contacts supplied separately see page 103	Square flange receptacle	Without (Fig. 1)	UTS0128P	UTS0128S
	Free hanging receptacle	Cable gland and grommet (Fig. 2)	UTS1GJC128P	-
	Free hanging receptacle	Nut and grommet (Fig. 3)	UTS1GN128P	-
	M20 threaded receptacle	Panel gasket and nut (Fig. 8)	UTS7128PM20NUT	UTS7128SM20NUT
		Panel gasket (Fig. 9)	UTS7128PM20	UTS7128SM20
	Free hanging receptacle	Cable gland (Fig. 2)	UTS1JC128P	UTS1JC128S
	Plug	Without (Fig. 10)	UTS6128P	UTS6128S
	Plug	Cable gland and grommet (Fig. 11)	-	UTS6GJC128S
	Plug	Nut and grommet (Fig. 12)	-	UTS6GN128S
	Plug	Cable gland (Fig. 11)	UTS6JC128P	UTS6JC128S
	Jam nut receptacle	Without (Fig. 4)	UTS7128P	UTS7128S
	Jam nut receptacle	Cable gland and grommet (Fig. 7)	UTS7GJC128P	-
	Jam nut receptacle	Nut and grommet (Fig. 6)	UTS7GN128P	-
PCB contacts loaded see page 103	Jam nut receptacle	With stand off and hold down clip (Fig. 5)	UTS7128PSEK9	-

Possibilities of discrimination/keying methods see page 208

Overmoulded Cable Assembly Part Numbers

Overmoulding type	Connector type	Wire size (mm²)	Harmonized cable part number (1)	Part number (length: 1m.)*	
				Male plug	Female plug
Straight ending	Plug	1.5	H05 VV - F 8x1.5	HAUTS0V128PST100	HAUTS0V128SST100
Right angle ending	Plug	1.5	H05 VV - F 8x1.5	HAUTS0V128PRA100	HAUTS0V128SRA100

(1) Other cable available on demand

* Other lengths available on demand

128 (Shell size 12, 8x#16)

Dimensions

Square Flange Receptacle - UTS0

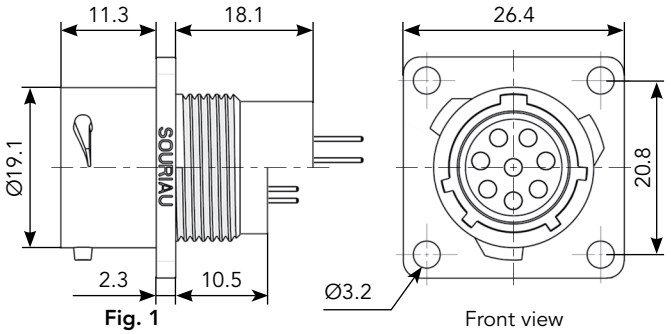

Fig. 1

Free Hanging - UTS1

Fig. 2

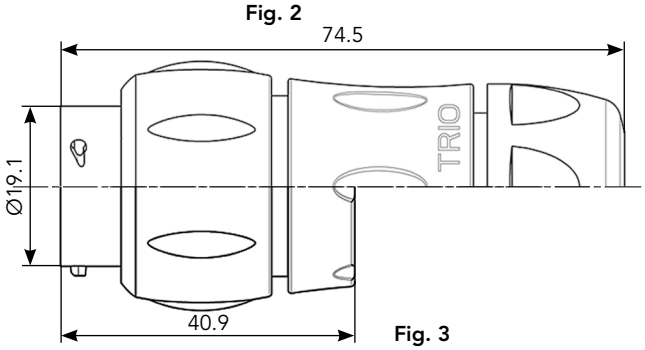

Fig. 3

Jam Nut & M20 Threaded Receptacle - UTS7

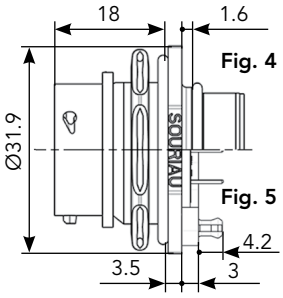

Fig. 4

Fig. 5

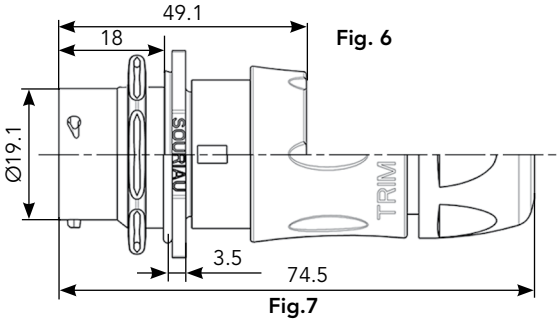

Fig. 6

Fig.7

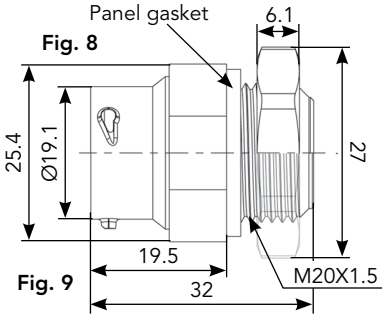

Fig. 8

Fig. 9

Plug - UTS6

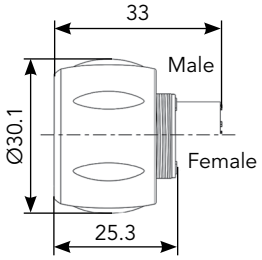

Fig. 10

Fig. 11

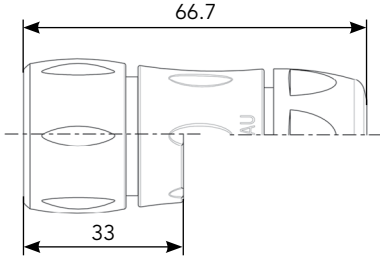

Fig. 12

Mated Connector Lengths

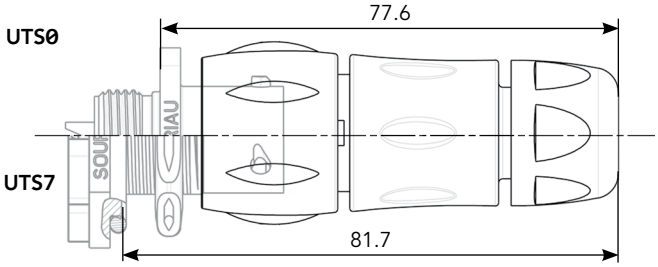

Panel Cut Out

Square Flange Receptacle - UTS0

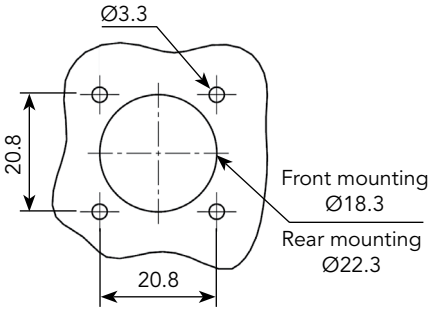

Jam Nut Receptacle - UTS7

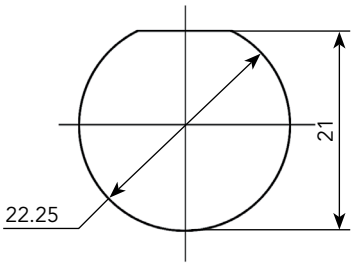

Drilling Pattern

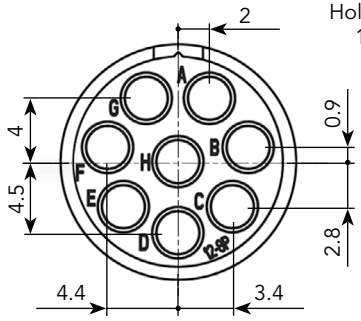

Note: Overmoulded cable assembly dimensions available page 179.

Note: all dimensions are in mm

128 (Shell size 12, 8x#16)

Accessories and Tooling

Jam Nut Sealing Caps

IP68/69K

Part number
UTS12DCG

IP68/69K Metal terminal

Part number
UTS12DCGR

Handle (without Head)

Part number
SHANDLES

Tool Kit

Part number
TOOLKIT

Plug Sealing Cap

IP68/69K

Part number
UTS612DCG

Square Flange Sealing Cap

IP68/69K Metal terminal

Part number
UTS12DCGE

Crimp Tooling (without Shandles)

Contacts	Contact size	Part number of head
RM/RC 28M1K(1)	Standard contacts #16 Ø 1.6mm	S16RCM20*
RM/RC 24M9K(1)		S16RCM20*
RM/RC 20M13K(1)		S16RCM20*
RM/RC 20M12K(1)		S16RCM20*
RM/RC 16M23K(1)		S16RCM16*
RM/RC 14M30K(1)		S16RCM14*
SM/SC 24ML1TK6(1)		S16SCM20*
SM/SC 20ML1TK6(1)		S16SCM20*
SM/SC 16ML1TK6(1)		S16SCML1*
SM/SC 14ML1TK6(1)		S16SCML1*
SM/SC 16ML11TK6(1)		S16SCML11*
RMDXK10D28K	Coaxial contacts	M10S1J with die set & stop bushing see page 200 to 204
RCDXK1D28K		
RM/RC DX60xxD28K		
RM/RC DXK10D28 + york090		
RM/RC DX60xxD28		

(1): Example of plating, for other plating options see page 164
* Heads to be used with handle PN: SHANDLES

Plastic Protective Cap

Part numbers	
Receptacle cap	Plug cap
85005587A	85005596

Gasket

Part numbers
UTFD13B

Color Coding Rings

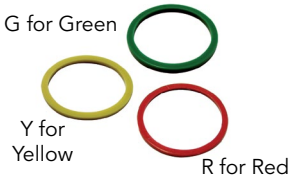

Part numbers	
Receptacles	Plugs
UTS712CCRR	UTS612CCRR
UTS712CCRY	UTS612CCRY
UTS712CCRG	UTS612CCRG

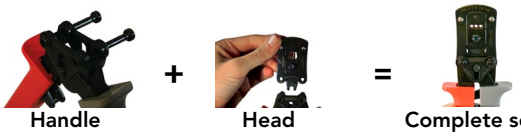

Handle Head Complete set

128 (Shell size 12, 8x#16)

Contacts

#16	Contact type	AWG	Part number		Max wire Ø	Max insulator Ø
			Male	Female		
Crimp	Machined	30-28	RM28M1K(1)	RC28M1K(1)	0.55	1.00
		26-24	RM24M9K(1)	RC24M9K(1)	0.80	1.60
		22-20	RM20M13K(1)	RC20M13K(1)	1.15	1.80
		22-20	RM20M12K(1)	RC20M12K(1)	1.15	2.20
		20-16	RM16M23K(1)	RC16M23K(1)	1.80	3.20
		16-14	RM14M30K(1)	RC14M30K(1)	2.30	3.20
	Stamped & Formed reeled contacts See note (2) for loose piece	26-24	SM24M1TK6(1)(2)	SC24M1TK6(1)(2)	-	0.90-1.60
		22-20	SM20M1TK6(1)(2)	SC20M1TK6(1)(2)	-	1.20-2.10
		18-16	SM16M1TK6(1)(2)	SC16M1TK6(1)(2)	-	3.20
		18-16	SM16M11TK6(1)(2)	SC16M11TK6(1)(2)	-	3.00
		14	SM14M1TK6(1)(2)	SC14M1TK6(1)(2)	-	3.20
PCB	Machined (3)	-	RM20M12E83K(1)	RC20M12E84K(1)	-	-
Coaxial	Cable Multipiece	see pages 167, 200 to 206	RMDXK10D28	RCDXK1D28	-	-
	Cable Monocrimp		RMDX60xxD28	RCDX60xxD28	-	-
	Twisted pair Multipiece		RMDXK10D28 + york090	RCDXK1D28 + york090	-	-
	Twisted pair Monocrimp		RMDX60xxD28	RCDX60xxD28	-	-
Fiber optic	POF contacts (Plastic Optical Fiber)	-	RMPOF1000	RCPOF1000B	-	-
Hand-solder	Loaded in the connector	14-18	-	-	-	-

(1): Example of plating, for other plating see page 164 (2): Loose piece contact available if putting L. Example: SM20ML1TK6 (3): For dimensions see page 168 Note: all dimensions are in mm

Electrical Characteristics

UL
10A 500V UL94 V-0

CSA
7A 500V UL94 V-0

IEC
10A 80V 1.5kV 3

UTS 128 Derating Curves

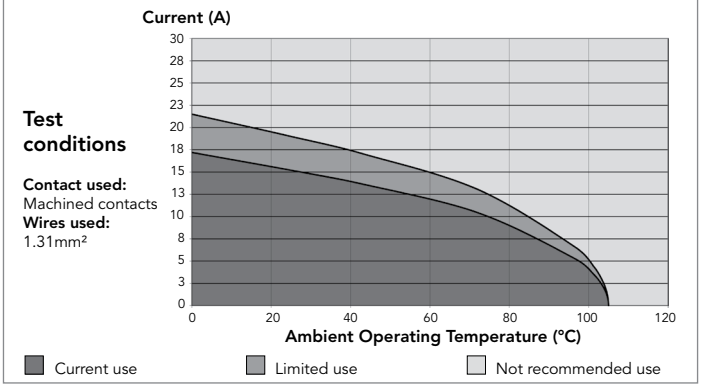

12E8/12D8 (Shell size 12, 8x#20)

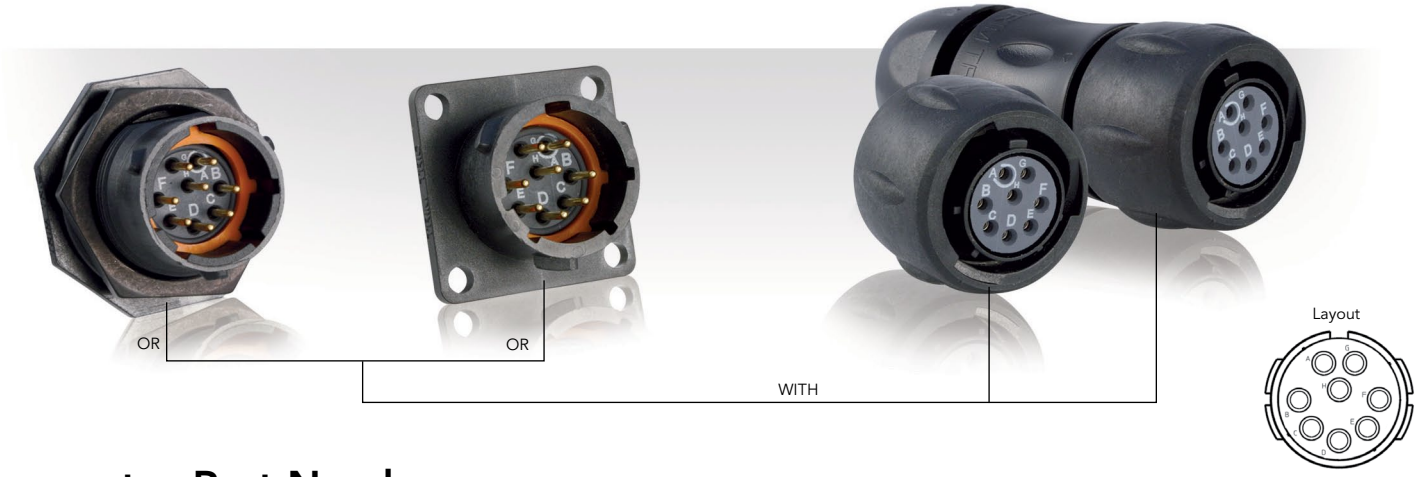

Connector Part Numbers

Contact type	Connector type	Backshell	Part number	
			Male insert	Female insert
Handsolder electrical contacts loaded see page 107	Square flange receptacle	Without (Fig. 6)	UTS012E8P	UTS012E8S
	Plug	Without (Fig. 1)	UTS612E8P	UTS612E8S
		Cable gland (Fig. 2)	UTS6JC12E8P	UTS6JC12E8S
	Jam nut receptacle	Without (Fig. 3)	UTS712E8P	UTS712E8S
PCB contacts loaded see page 107	Square flange receptacle	Without (Fig. 7)	UTS012D8P	UTS012D8S
	Jam nut receptacle with stand off and with hold down clips	Without (Fig. 4)	UTS712D8P32	UTS712D8S32
	Jam nut receptacle with stand off and without hold down clip	Without (Fig. 5)	UTS712D8P	UTS712D8S

Possibilities of discrimination/keying methods see page 208

Sealed unmated

Overmoulded Cable Assembly Part Numbers

Overmoulding type	Connector type	Wire size (mm²)	Harmonized cable part number (1)	Part number (length: 1m.)*	
				Male plug	Female plug
Straight ending	Plug	0.5	H05 VV - F 8x0.5	HAUTS0V12E8PST100	HAUTS0V12E8SST100
Right angle ending	Plug	0.5	H05 VV - F 8x0.5	HAUTS0V12E8PRA100	HAUTS0V12E8SRA100

(1) Other cable available on demand

* Other lengths available on demand

12E8/12D8 (Shell size 12, 8x#20)

Dimensions

Plug - UTS6

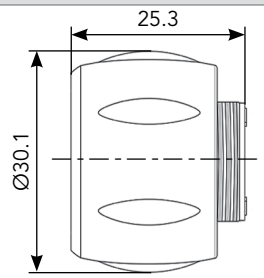

Fig. 1

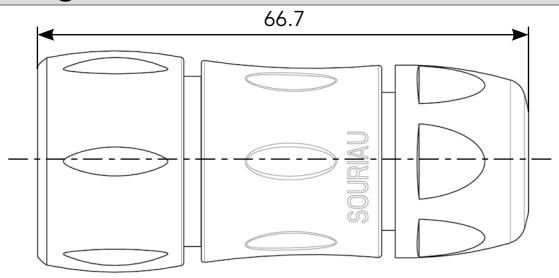

Fig. 2

Jam Nut Receptacle - UTS7

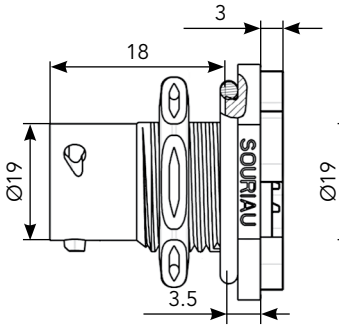

Fig. 3

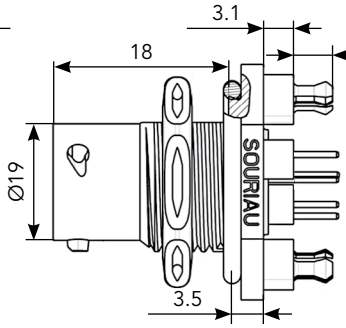

Fig. 4

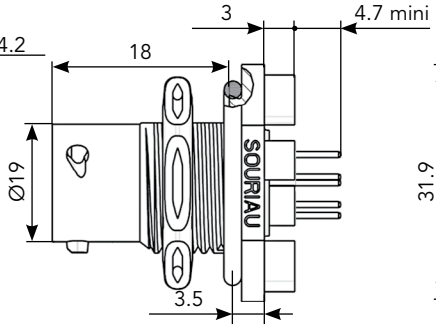

Fig. 5

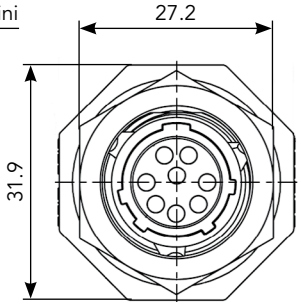

Front view

Square Flange Receptacle - UTS0

Fig. 7

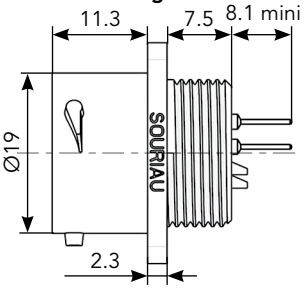

Fig. 6

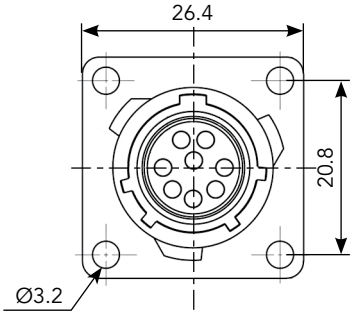

Front view

Mated Connector Lengths

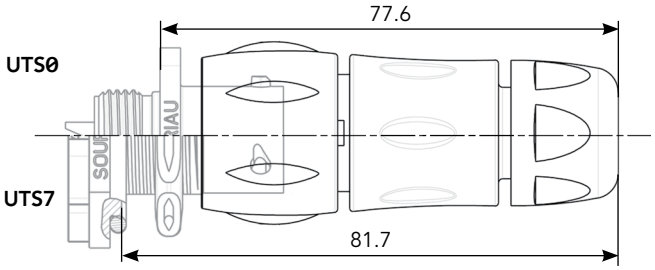

Panel Cut Out

Square Flange Receptacle - UTS0

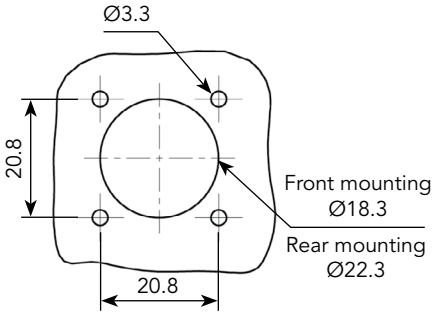

Jam Nut Receptacle - UTS7

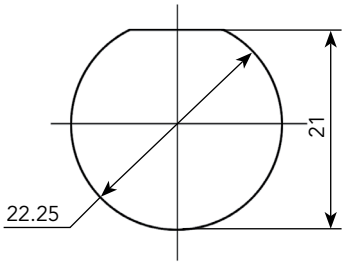

Drilling Pattern

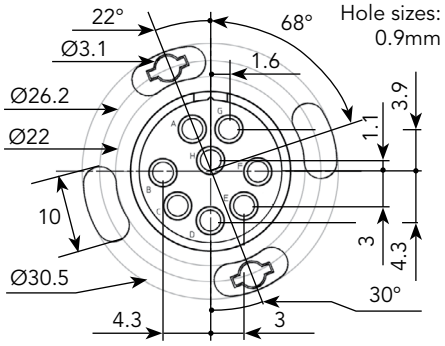

Note: Overmoulded cable assembly dimensions available page 179.

Note: all dimensions are in mm

12E8/12D8 (Shell size 12, 8x#20)

Accessories and Tooling

Jam Nut Sealing Caps

IP68/69K

Part number
UTS12DCG

IP68/69K Metal terminal

Part number
UTS12DCGR

Plug Sealing Cap

IP68/69K

Part number
UTS612DCG

Square Flange Sealing Cap

IP68/69K Metal terminal

Part number
UTS12DCGE

Plastic Protective Cap

Part numbers	
Receptacle cap	Plug cap
85005587A	85005596

Gasket

Part numbers
UTFD13B

Color Coding Rings

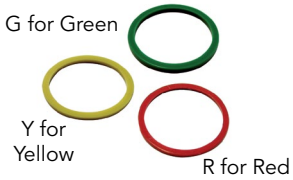

Part numbers	
Receptacles	Plugs
UTS712CCRR	UTS612CCRR
UTS712CCRY	UTS612CCRY
UTS712CCRG	UTS612CCRG

12E8/12D8 (Shell size 12, 8x#20)

Contacts

#20	Contact type	Plating	Cable acceptance (AWG)	Wire stripping length
Handsolder	Loaded in the connector	Min 0.4µ gold over 0.8µ Ni	22 to 18	5 mm
PCB	Machined (1)	Min 0.4µ gold over 0.8µ Ni	-	-

(1): For dimensions see page 169

Electrical Characteristics

UL
4.5A 250V UL94 HB

CSA
4.5A 250V UL94 HB

IEC
6A 32V 1.5kV 3

UTS 12E8/12D8 Derating Curves

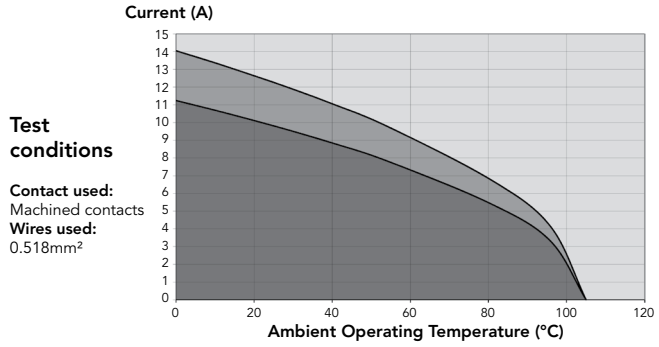

Test conditions

Contact used:
Machined contacts
Wires used:
0.518mm²

148 (Shell size 14, 4x#16, 4x#12)

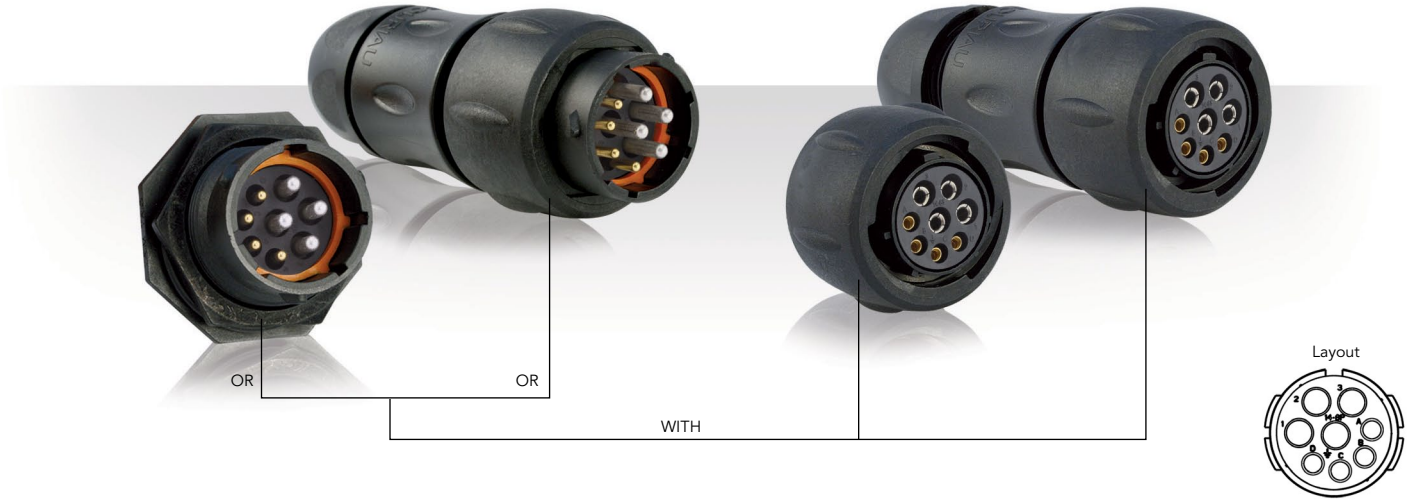

Connector Part Numbers

Contact type	Connector type	Backshell	Part number	
			Male insert	Female insert
Crimp contacts supplied separately see page 111	Free hanging receptacle	Cable gland (Fig. 1)	**UTS1JC148P**	**UTS1JC148S**
	Plug	Without (Fig. 2)	**UTS6148P**	**UTS6148S**
	Plug	Cable gland (Fig. 3)	**UTS6JC148P**	**UTS6JC148S**
	Jam nut receptacle	Without (Fig. 4)	**UTS7148P**	**UTS7148S**

148 (Shell size 14, 4x#16, 4x#12)

Dimensions

Free Hanging - UTS1

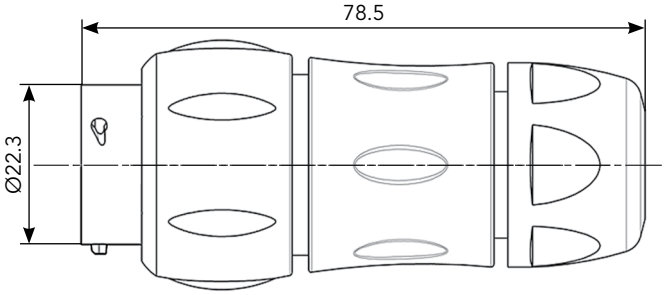

Fig. 1

Plug - UTS6

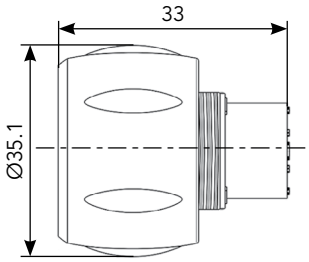

Fig. 2 Male

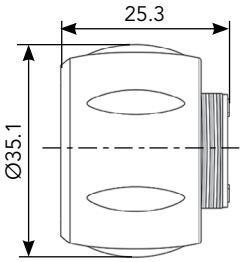

Fig. 2 Female

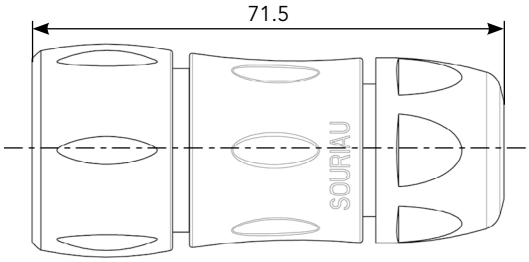

Fig. 3

Jam Nut Receptacle - UTS7

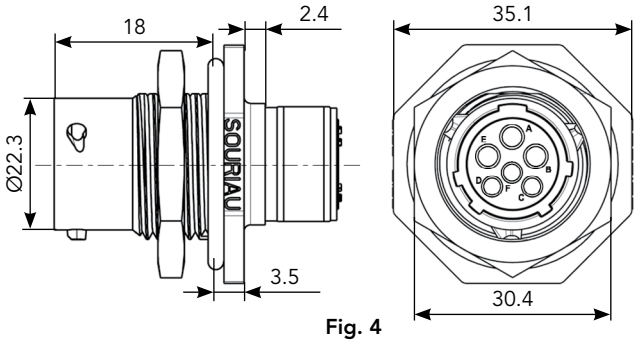

Fig. 4

Mated Connector Length - UTS7

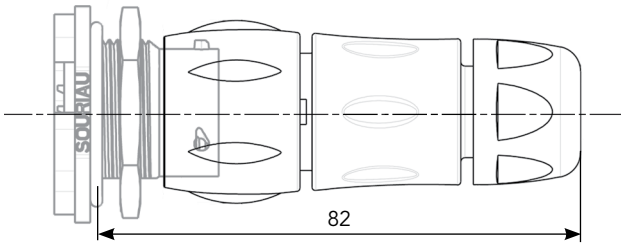

Panel Cut Out

Jam Nut Receptacle - UTS7

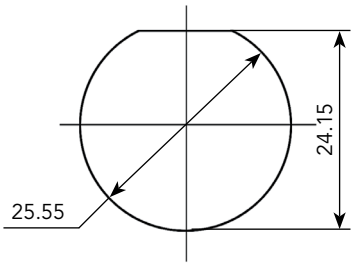

Drilling Pattern

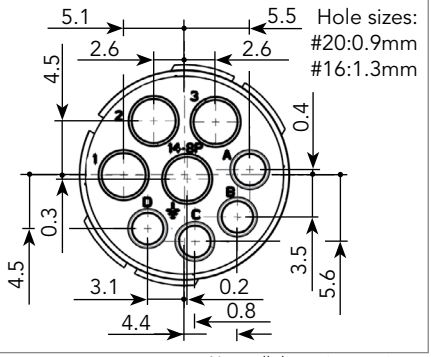

Hole sizes:
#20:0.9mm
#16:1.3mm

Note: all dimensions are in mm

148 (Shell size 14, 4x#16, 4x#12)

Accessories and Tooling

Jam Nut Sealing Caps

IP68/69K

Part number
UTS14DCG

IP68/69K Metal terminal

Part number
UTS14DCGR

Plug Sealing Cap

IP68/69K

Part number
UTS614DCG

Square Flange Sealing Cap

IP68/69K Metal terminal

Part number
UTS14DCGE

Plastic Protective Cap

Part numbers	
Receptacle cap	Plug cap
85005588A	85005597

Gasket

Part numbers
UTFD14B

Color Coding Rings

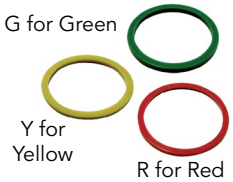

Part numbers	
Receptacles	Plugs
UTS714CCRR	UTS614CCRR
UTS714CCRY	UTS614CCRY
UTS714CCRG	UTS614CCRG

Extraction Tool

Part number Extraction tool #12
51060210924

Part number Extraction tool #16
VGE10078A

Crimp Tooling #16

Part number
SHANDLES (without Head)

Part number
TOOLKIT

HEAD (without Shandles)

Contacts	Contact size	Part number of head
RM/RC 28M1K	Standard contacts #16 Ø 1.6mm	S16RCM20*
RM/RC 24M9K		S16RCM20*
RM/RC 20M13K		S16RCM20*
RM/RC 20M12K		S16RCM20*
RM/RC 16M23K		S16RCM16*
RM/RC 14M30K		S16RCM14*
SM/SC 24ML1TK6(1)		S16SCM20*
SM/SC 20ML1TK6(1)		S16SCM20*
SM/SC 16ML1TK6(1)		S16SCML1*
SM/SC 14ML1TK6(1)		S16SCML1*
SM/SC 16ML11TK6(1)		S16SCML11*

(1): Example of plating, for other plating see page 164
*: Heads to be used with handle PN: SHANDLES

Handle

+

Head

=

Complete set

Crimp Tooling #12

Part number hand tool
M317

Part number positioner + locator setting
VGE10078A

148 (Shell size 14, 4x#16, 4x#12)

Contacts

#16	Contact type	AWG	Part number		Max wire Ø	Max insulator Ø
			Male	Female		
Crimp	Machined	30-28	RM28M1K(1)	RC28M1K(1)	0.55	1.00
		26-24	RM24M9K(1)	RC24M9K(1)	0.80	1.60
		22-20	RM20M13K(1)	RC20M13K(1)	1.15	1.80
		22-20	RM20M12K(1)	RC20M12K(1)	1.15	2.20
		20-16	RM16M23K(1)	RC16M23K(1)	1.80	3.20
		16-14	RM14M30K(1)	RC14M30K(1)	2.30	3.20
	Stamped & Formed reeled contacts See note (2) for loose piece	26-24	SM24M1TK6(1)(2)	SC24M1TK6(1)(2)	-	0.90-1.60
		22-20	SM20M1TK6(1)(2)	SC20M1TK6(1)(2)	-	1.20-2.10
		18-16	SM16M1TK6(1)(2)	SC16M1TK6(1)(2)	-	3.20
		18-16	SM16M11TK6(1)(2)	SC16M11TK6(1)(2)	-	3.00
		14	SM14M1TK6(1)(2)	SC14M1TK6(1)(2)	-	3.20
Coaxial	Cable Multipiece	see pages 167, 200 to 206	RMDXK10D28	RCDXK1D28	-	-
	Cable Monocrimp		RMDX60xxD28	RCDX60xxD28	-	-
	Twisted pair Multipiece		RMDXK10D28 + york090	RCDXK1D28 + york090	-	-
	Twisted pair Monocrimp		RMDX60xxD28	RCDX60xxD28	-	-
#12						
Crimp	Machined	22	82911457NA(1)	82911456A(1)	0.87	4.90
		20	82911459NA(1)	82911458A(1)	1.12	
		18	82911461NA(1)	82911460A(1)	1.42	
		16	82911463NA(1)	82911462A(1)	1.72	
		14	82911465NA(1)	82911464A(1)	2.22	
		12	82911467NA(1)	82911466A(1)	2.82	

(1): Example of plating, for other plating see page 164 (2): Loose piece contact available if putting L. Example: SM20ML1TK6 Note: all dimensions are in mm

Electrical Characteristics

UL
25A 250V UL94 V-0

CSA
17A 230V UL94 V-0

IEC
17A 230V 1.5kV 3

UTS 148 Derating Curves

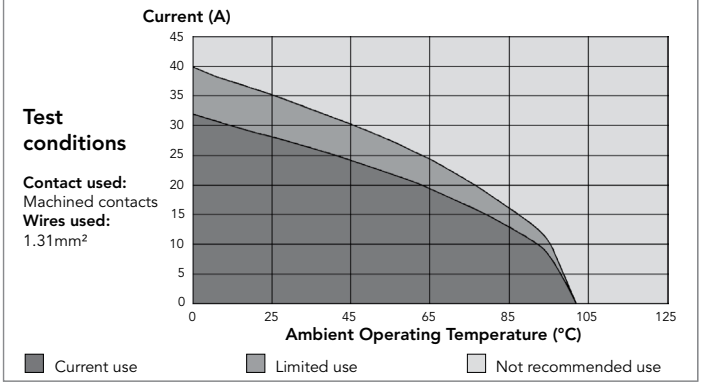

1210 - 12E10/12D10 (Shell size 12, 10x#20)

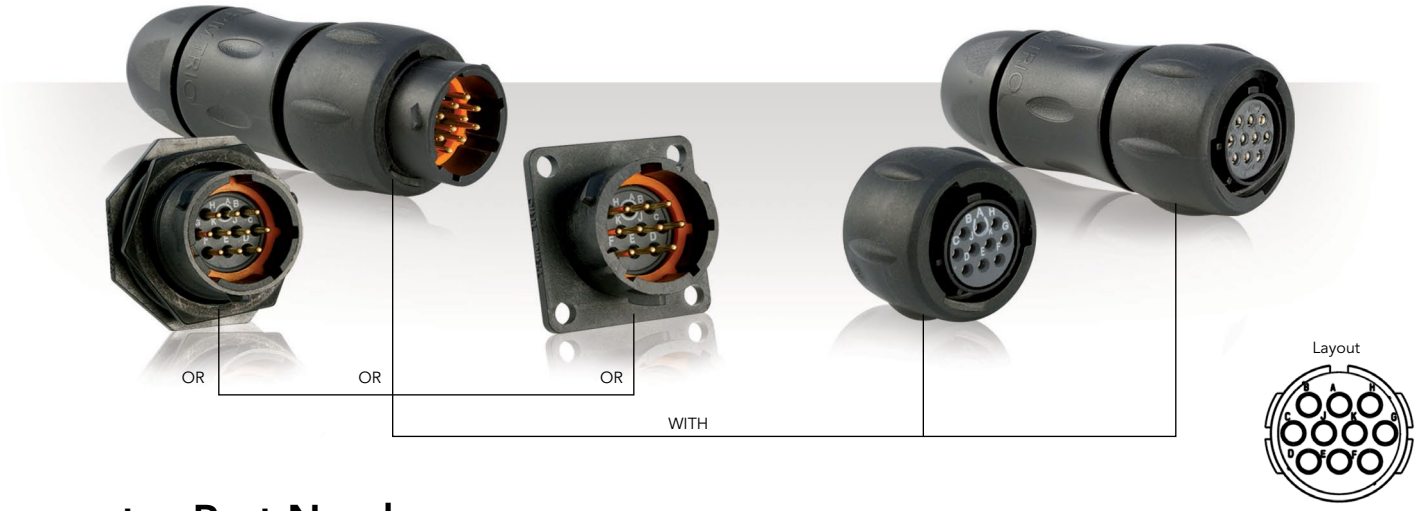

Connector Part Numbers

Contact type	Connector type	Backshell	Part number	
			Male insert	Female insert
Crimp contacts supplied separately see page 115	Free hanging receptacle	Cable gland (Fig. 1)	UTS1JC1210P	UTS1JC1210S
	Plug	Without (Fig. 2)	UTS61210P	UTS61210S
	Plug	Cable gland (Fig. 3)	UTS6JC1210P	UTS6JC1210S
	Jam nut receptacle	Without (Fig. 4)	UTS71210P	UTS71210S
Handsolder electrical contacts loaded see page 115	Square flange receptacle	Without (Fig. 6)	UTS012E10P	UTS012E10S
	Plug	Without (Fig. 2)	UTS612E10P	UTS612E10S
		Cable gland (Fig. 3)	UTS6JC12E10P	UTS6JC12E10S
	Jam nut receptacle	Without (Fig. 5)	UTS712E10P	UTS712E10S
PCB contacts loaded see page 115	Square flange receptacle	Without (Fig. 7)	UTS012D10P	UTS012D10S
	Jam nut receptacle with stand off and with hold down clips	Without (Fig. 6)	UTS712D10P32	UTS712D10S32
	Jam nut receptacle with stand off and without hold down clip	Without (Fig. 7)	UTS712D10P	UTS712D10S

Possibilities of discrimination/keying methods see page 208

Sealed unmated

Overmoulded Cable Assembly Part Numbers

Overmoulding type	Connector type	Wire size (mm²)	Harmonized cable part number (1)	Part number (length: 1m.)*	
				Male plug	Female plug
Straight ending	Plug	0.5	H05 VV - F 10x0.5	HAUTS0V1210PST100	HAUTS0V1210SST100
				HAUTS0V12E10PST100	HAUTS0V12E10SST100
Right angle ending	Plug	0.5	H05 VV - F 10x0.5	HAUTS0V1210PRA100	HAUTS0V1210SRA100
				HAUTS0V12E10PRA100	HAUTS0V12E10SRA100

(1) Other cable available on demand

* Other lengths available on demand

1210 - 12E10/12D10 (Shell size 12, 10x#20)

Dimensions

Free Hanging - UTS1

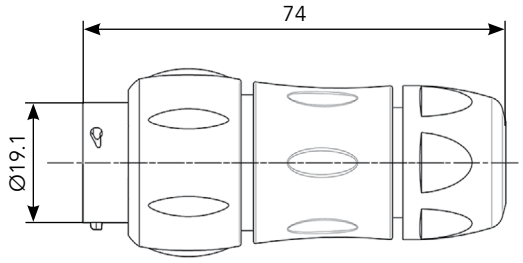

Fig. 1

Plug - UTS6

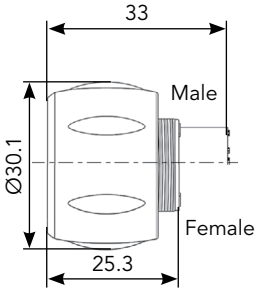

Fig. 2

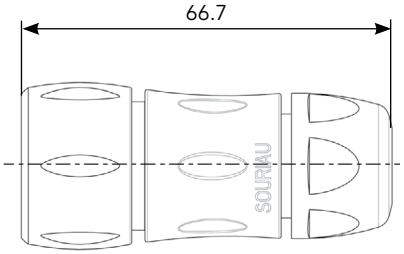

Fig. 3

Jam Nut Receptacle - UTS7

Fig. 4

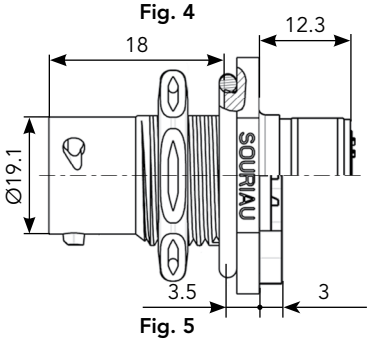

Fig. 5

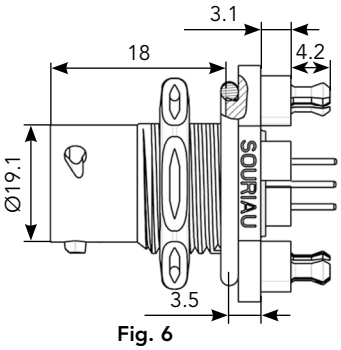

Fig. 6

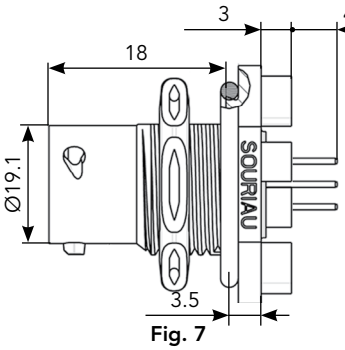

Fig. 7

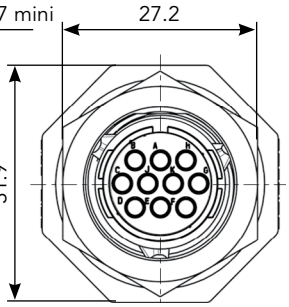

Front view

Square Flange Receptacle - UTS0

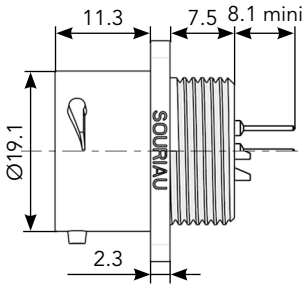

Fig. 8

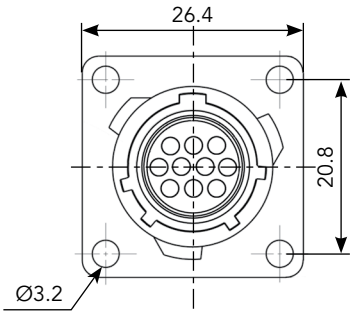

Front view

Mated Connector Lengths

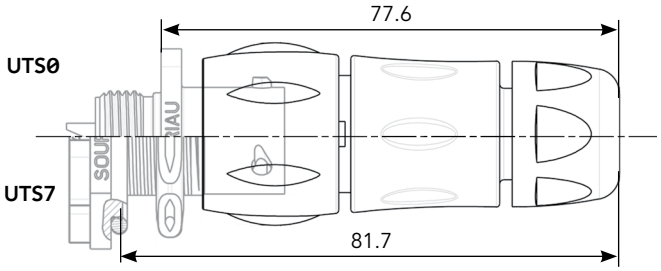

Panel Cut Out

Square Flange Receptacle - UTS0

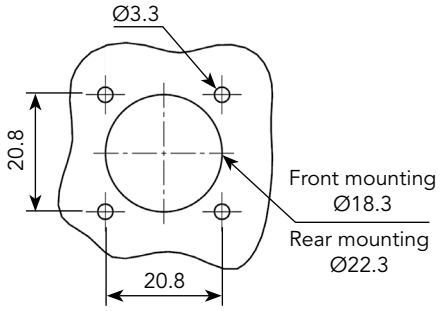

Jam Nut Receptacle - UTS7

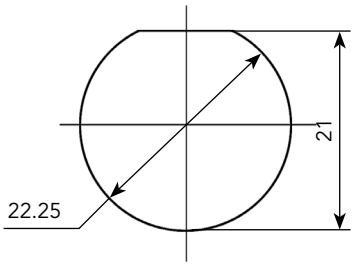

Drilling Pattern

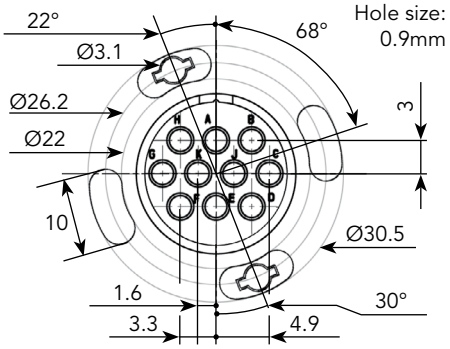

Note: Overmoulded cable assembly dimensions available page 179.

Note: all dimensions are in mm

1210 - 12E10/12D10 (Shell size 12, 10x#20)

Accessories and Tooling

Jam Nut Sealing Caps

IP68/69K

Part number
UTS12DCG

IP68/69K Metal terminal

Part number
UTS12DCGR

Handle (without Head)

Part number
SHANDLES

Tool Kit

Part number
TOOLKIT

Plug Sealing Cap

IP68/69K

Part number
UTS612DCG

Square Flange Sealing Cap

IP68/69K Metal terminal

Part number
UTS12DCGE

Crimp Tooling (without Shandles)

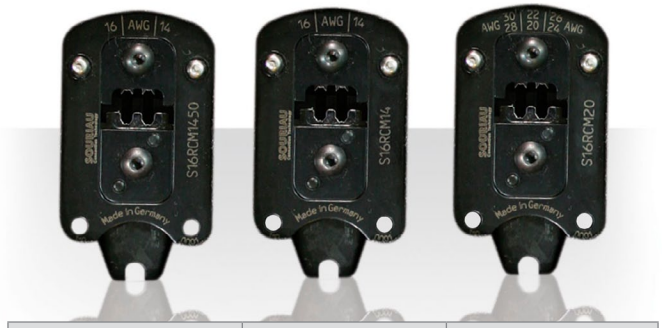

Contacts	Contact size	Part number of head
RM/RC 24W3K(1)	Standard contacts #20 Ø 1mm	S20RCM*
RM/RC 20W3K(1)		S20RCM*
RM/RC 18W3K(1)		S20RCM*
SM/SC 24WL3S		S20SCM20*
SM/SC 20WL3S		S20SCM20*

(1): Example of plating, for other plating see page 164
*: Heads to be used with handle PN: SHANDLES

Handle

+

Head

=

Complete set

Plastic Protective Cap

Part numbers	
Receptacle cap	Plug cap
85005587A	85005596

Gasket

Part numbers
UTFD13B

Color Coding Rings

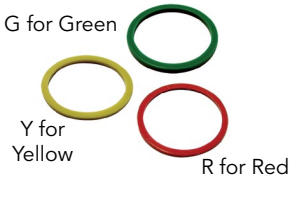

Part numbers	
Receptacles	Plugs
UTS712CCRR	UTS612CCRR
UTS712CCRY	UTS612CCRY
UTS712CCRG	UTS612CCRG

Extraction Tool #20

Part number
RX20D44

1210 - 12E10/12D10 (Shell size 12, 10x#20)

Contacts

#20	Contact type	Wire size		Part number		Max wire Ø	Max insulator Ø
		AWG	mm²	Male	Female		
Crimp	Machined	26-24	0.13-0.25	RM24W3K(1)	RC24W3K(1)	0.80	1.60
		22-20	0.32-0.52	RM20W3K(1)	RC20W3K(1)	1.15	1.60
		20-18	0.50-0.93	RM18W3K(1)	RC18W3K(1)	1.30	2.10
	Stamped & Formed reeled contacts See note (2) for loose piece	26-24	0.13-0.25	SM24W3TK6(2)	SC24W3TK6(2)	-	0.90-1.60
		26-24	0.13-0.25	SM24W3S26(2)	SC24W3S25(2)	-	0.90-1.60
		22-20	0.32-0.52	SM20W3TK6(2)	SC20W3TK6(2)	-	1.20-2.10
		22-20	0.32-0.52	SM20W3S26(2)	SC20W3S25(2)	-	1.20-2.10
PCB	Machined (3)	-	-	RMW5016K	RCW5016K	-	-

(1): Example of plating, for other plating see page 164 (2): Loose piece contact available if putting L. Example: SM20WL3TK6 (3): For dimensions see page 168 Note: all dimensions are in mm

#20	Contact type	Plating	Cable acceptance (AWG)	Wire stripping length
Handsolder	Loaded in the connector	Min 0.4µ gold over 0.8µ Ni	22 to 18	3.8 mm

Electrical Characteristics

UTS 1210
UL
5A 250V UL94 V-0

UTS 12E10/12D10
UL
4.5A 250V UL94 HB

CSA
4A 250V UL94 V-0

CSA
4.5A 250V UL94 HB

IEC
6A 50V 1.5kV 3

UTS 1210 - 12E10/12D10 Derating Curves

Test conditions

Contact used:
Machined contacts
Wires used:
0.518mm²

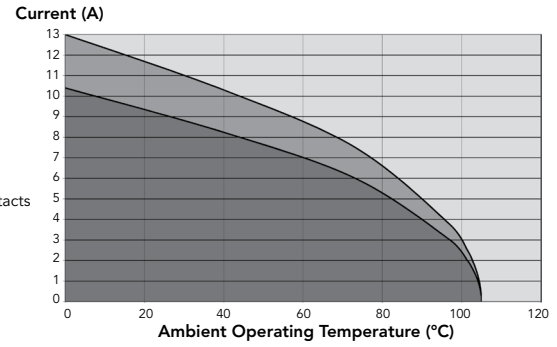

1412 (Shell size 14, 12x#16)

Connector Part Numbers

Contact type	Connector type	Backshell	Part number	
			Male insert	Female insert
Crimp contacts supplied separately see page 119	Square flange receptacle	Without (Fig. 1)	UTS01412P	UTS01412S
	Free hanging receptacle	Cable gland and grommet (Fig. 2)	UTS1GJC1412P	-
	Free hanging receptacle	Nut and grommet (Fig. 3)	UTS1GN1412P	-
	Free hanging receptacle	Cable gland (Fig. 2)	UTS1JC1412P	UTS1JC1412S
	Plug	Without (Fig. 4)	UTS61412P	UTS61412S
	Plug	Cable gland and grommet (Fig. 5)	-	UTS6GJC1412S
	Plug	Nut and grommet (Fig. 6)	-	UTS6GN1412S
	Plug	Cable gland (Fig. 5)	UTS6JC1412P	UTS6JC1412S
	Jam nut receptacle	Without (Fig. 7)	UTS71412P	UTS71412S
	Jam nut receptacle	Cable gland and grommet (Fig. 9)	UTS7GJC1412P	-
	Jam nut receptacle	Nut and grommet (Fig. 8)	UTS7GN1412P	-
PCB contacts supplied separately see page 119	Square flange receptacle	Without (Fig. 1)	UTS01412P	UTS01412S
	Jam nut receptacle	Without (Fig. 7)	UTS71412P	UTS71412S

Possibilities of discrimination/keying methods see page 208

Overmoulded Cable Assembly Part Numbers

Overmoulding type	Connector type	Wire size (mm²)	Harmonized cable part number (1)	Part number (length: 1m.)*	
				Male plug	Female plug
Straight ending	Plug	1.5	H05 VV - F 12x1.5	HAUTS0V1412PST100	HAUTS0V1412SST100
Right angle ending	Plug	1.5	H05 VV - F 12x1.5	HAUTS0V1412PRA100	HAUTS0V1412SRA100

(1) Other cable available on demand

* Other lengths available on demand

1412 (Shell size 14, 12x#16)

Dimensions

Square Flange Receptacle - UTS0

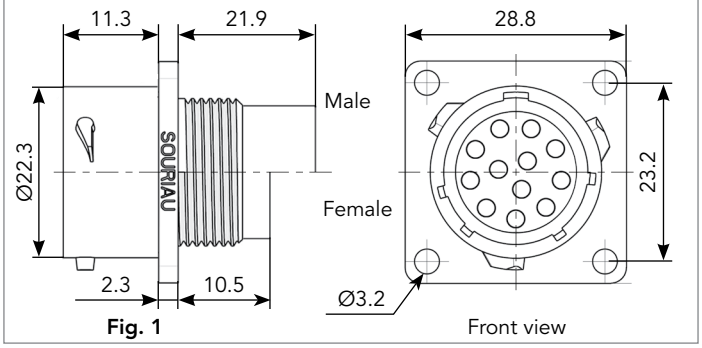

Fig. 1

Free Hanging - UTS1

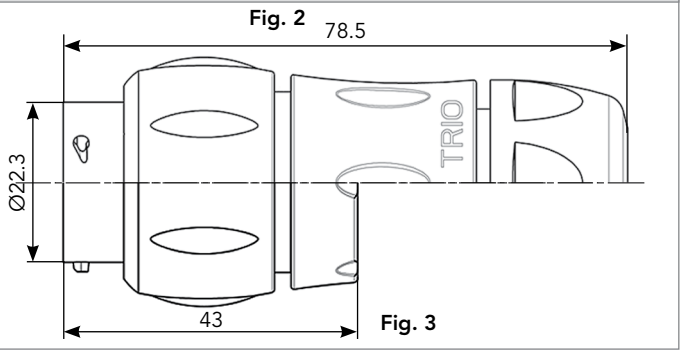

Fig. 2

Fig. 3

Plug - UTS6

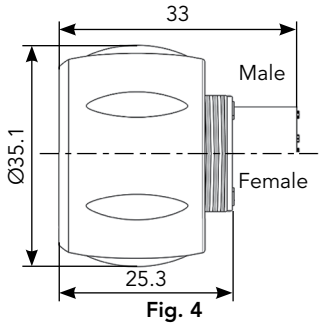

Fig. 4

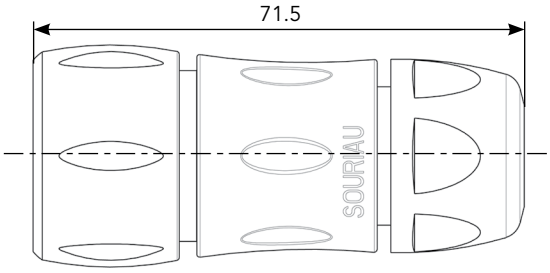

Fig. 5

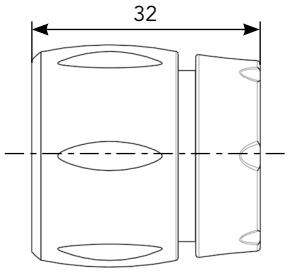

Fig. 6

Jam Nut Receptacle - UTS7

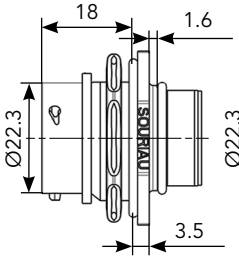

Fig. 7

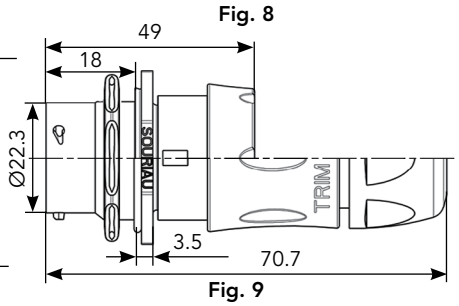

Fig. 8

Fig. 9

Mated Connector Lengths

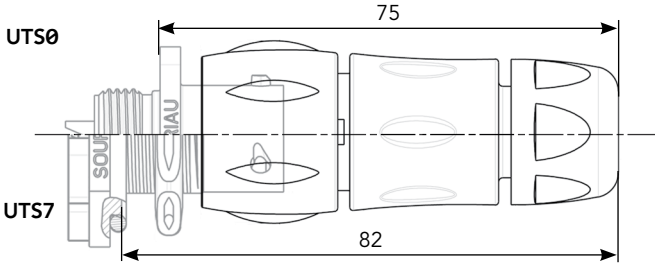

Panel Cut Out

Square Flange Receptacle - UTS0

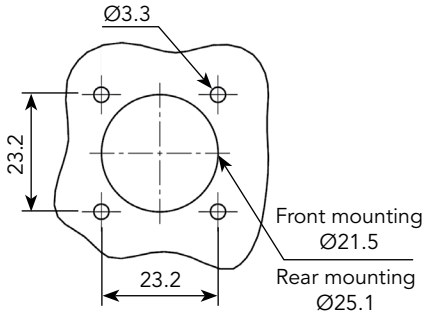

Jam Nut Receptacle - UTS7

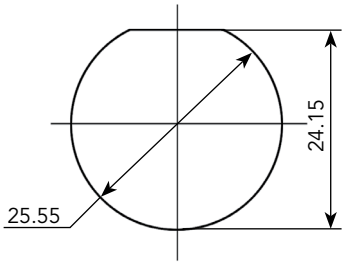

Drilling Pattern

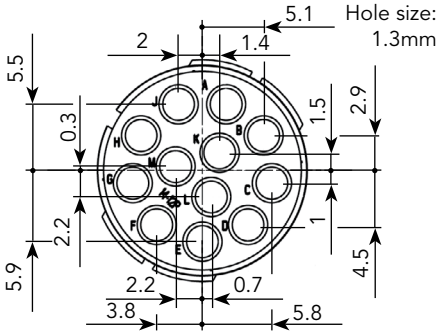

Note: Overmoulded cable assembly dimensions available page 179.

Note: all dimensions are in mm

1412 (Shell size 14, 12x#16)

Accessories and Tooling

Jam Nut Sealing Caps

IP68/69K

Part number
UTS14DCG

IP68/69K Metal terminal

Part number
UTS14DCGR

Handle (without Head)

Part number
SHANDLES

Tool Kit

Part number
TOOLKIT

Plug Sealing Cap

IP68/69K

Part number
UTS614DCG

Square Flange Sealing Cap

IP68/69K Metal terminal

Part number
UTS14DCGE

Plastic Protective Cap

Part numbers	
Receptacle cap	Plug cap
85005588A	85005597

Gasket

Part numbers
UTFD14B

Color Coding Rings

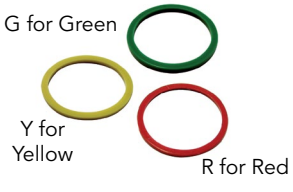

Part numbers	
Receptacles	Plugs
UTS714CCRR	UTS614CCRR
UTS714CCRY	UTS614CCRY
UTS714CCRG	UTS614CCRG

Crimp Tooling (without Shandles)

Contacts	Contact size	Part number of head
RM/RC 28M1K(1)	Standard contacts #16 Ø 1.6mm	S16RCM20*
RM/RC 24M9K(1)		S16RCM20*
RM/RC 20M13K(1)		S16RCM20*
RM/RC 20M12K(1)		S16RCM20*
RM/RC 16M23K(1)		S16RCM16*
RM/RC 14M30K(1)		S16RCM14*
SM/SC 24ML1TK6(1)		S16SCM20*
SM/SC 20ML1TK6(1)		S16SCM20*
SM/SC 16ML1TK6(1)		S16SCML1*
SM/SC 14ML1TK6(1)		S16SCML1*
SM/SC 16ML11TK6(1)		S16SCML11*
RMDXK10D28K	Coaxial contacts	M10S1J with die set & stop bushing see page 200 to 204
RCDXK1D28K		
RM/RC DX60xxD28K		
RM/RC DXK10D28 + york090		
RM/RC DX60xxD28		

(1): Example of plating, for other plating options see page 164
* Heads to be used with handle PN: SHANDLES

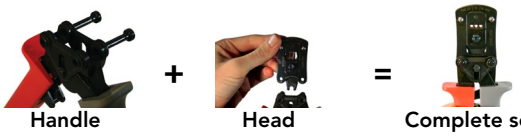

Handle Head Complete set

1412 (Shell size 14, 12x#16)

Contacts

#16	Contact type	AWG	Part number		Max wire Ø	Max insulator Ø
			Male	Female		
Crimp	Machined	30-28	RM28M1K(1)	RC28M1K(1)	0.55	1.00
		26-24	RM24M9K(1)	RC24M9K(1)	0.80	1.60
		22-20	RM20M13K(1)	RC20M13K(1)	1.15	1.80
		22-20	RM20M12K(1)	RC20M12K(1)	1.15	2.20
		20-16	RM16M23K(1)	RC16M23K(1)	1.80	3.20
		16-14	RM14M30K(1)	RC14M30K(1)	2.30	3.20
	Stamped & Formed reeled contacts See note (2) for loose piece	26-24	SM24M1TK6(1)(2)	SC24M1TK6(1)(2)	-	0.90-1.60
		22-20	SM20M1TK6(1)(2)	SC20M1TK6(1)(2)	-	1.20-2.10
		18-16	SM16M1TK6(1)(2)	SC16M1TK6(1)(2)	-	3.20
		18-16	SM16M11TK6(1)(2)	SC16M11TK6(1)(2)	-	3.00
		14	SM14M1TK6(1)(2)	SC14M1TK6(1)(2)	-	3.20
PCB	Machined (3)	-	RM20M12E83K(1)	RC20M12E84K(1)	-	-
Coaxial	Cable Multipiece	see pages 167, 200 to 206	RMDXK10D28	RCDXK1D28	-	-
	Cable Monocrimp		RMDX60xxD28	RCDX60xxD28	-	-
	Twisted pair Multipiece		RMDXK10D28 + york090	RCDXK1D28 + york090	-	-
	Twisted pair Monocrimp		RMDX60xxD28	RCDX60xxD28	-	-
Fiber optic	POF contacts (Plastic Optical Fiber)	-	RMPOF1000	RCPOF1000B	-	-
Hand-solder	Loaded in the connector	14-18	-	-		

(1): Example of plating, for other plating see page 164 (2): Loose piece contact available if putting L. Example: SM20ML1TK6 (3): For dimensions see page 168 Note: all dimensions are in mm

Electrical Characteristics

UL
10A 600V UL94 V-0

CSA
7A 600V UL94 V-0

IEC
10A 63V 1.5kV 3

UTS 1412 Derating Curves

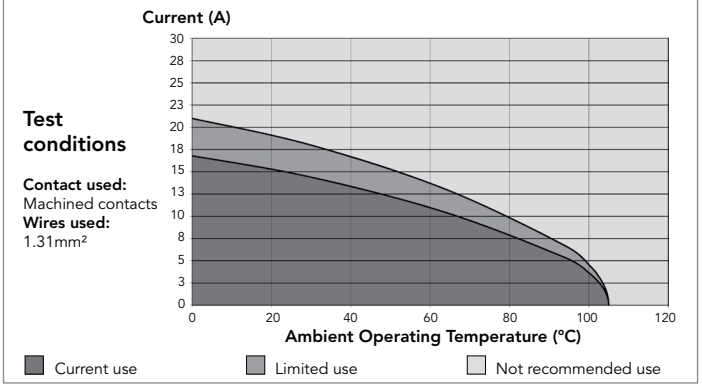

14E12/14D12 (Shell size 14, 8x#20, 4x#16)

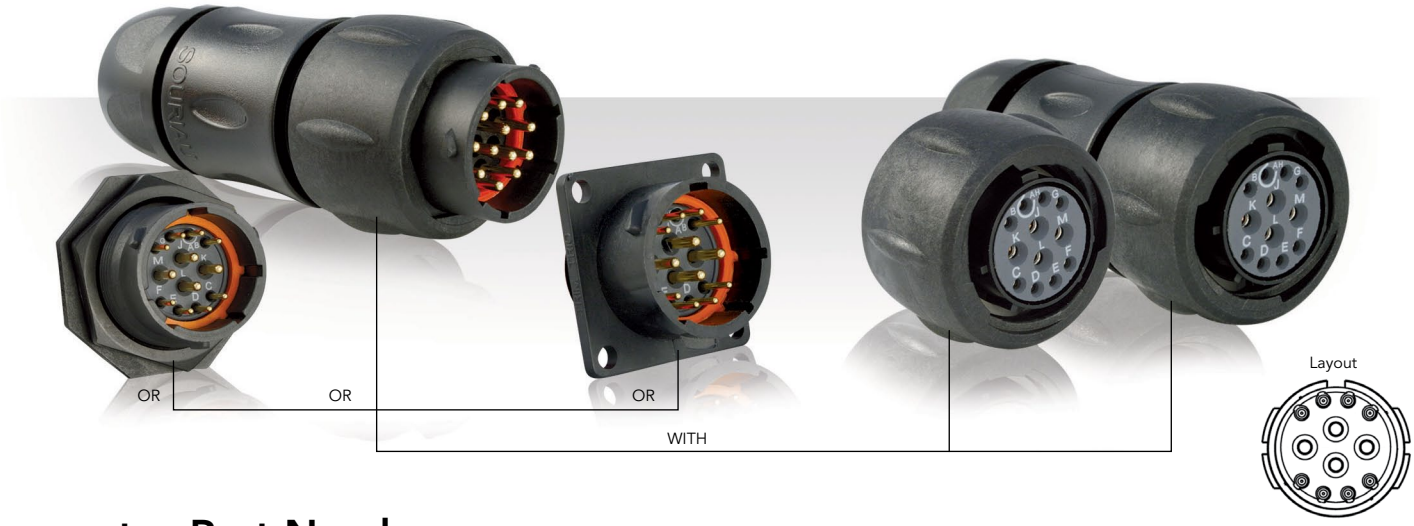

Connector Part Numbers

Contact type	Connector type	Backshell	Part number	
			Male insert	Female insert
Handsolder electrical contacts loaded see page 123	Square flange receptacle	Without (Fig. 6)	UTS014E12P	UTS014E12S
	Plug	Without (Fig. 1)	UTS614E12P	UTS614E12S
		Cable gland (Fig. 2)	UTS6JC14E12P	UTS6JC14E12S
	Jam nut receptacle	Without (Fig. 3)	UTS714E12P	UTS714E12S
PCB contacts loaded see page 123	Square flange receptacle	Without (Fig. 6)	UTS014D12P	UTS014D12S
	Jam nut receptacle with stand off and with hold down clips	Without (Fig. 4)	UTS714D12P32	UTS714D12S32
	Jam nut receptacle with stand off and without hold down clip	Without (Fig. 5)	UTS714D12P	UTS714D12S

Possibilities of discrimination/keying methods see page 208

Sealed unmated

Overmoulded Cable Assembly Part Numbers

Overmoulding type	Connector type	Wire size (mm²)	Harmonized cable part number (1)	Part number (length: 1m.)*	
				Male plug	Female plug
Straight ending	Plug	1.5	H05 VV - F 12x1.5	HAUTS0V14E12PST100	HAUTS0V14E12SST100
Right angle ending	Plug	1.5	H05 VV - F 12x1.5	HAUTS0V14E12PRA100	HAUTS0V14E12SRA100

(1) Other cable available on demand

* Other lengths available on demand

14E12/14D12 (Shell size 14, 8x#20, 4x#16)

Dimensions

Plug - UTS6

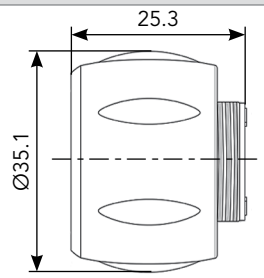

Fig. 1

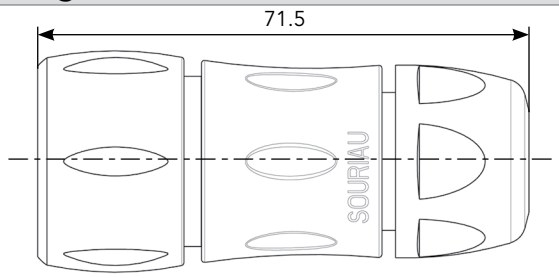

Fig. 2

Jam Nut Receptacle - UTS7

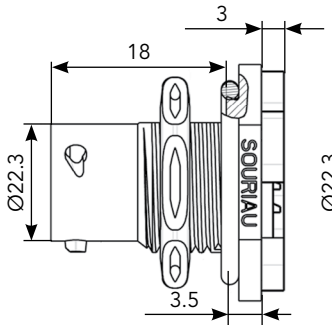

Fig. 3

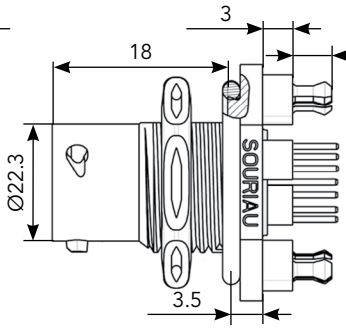

Fig. 4

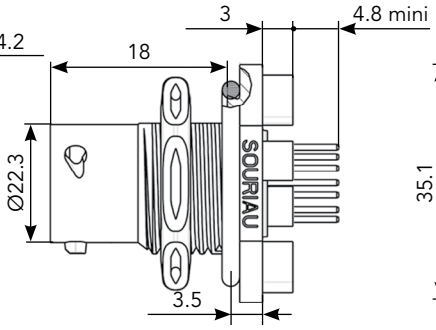

Fig. 5

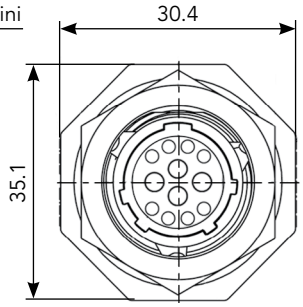

Front view

Square Flange Receptacle - UTS0

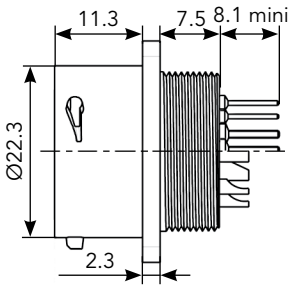

Fig. 6

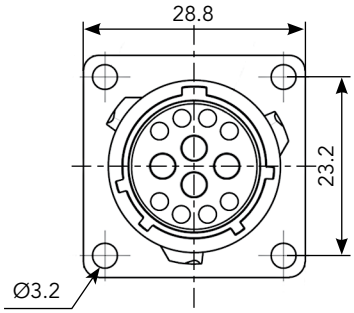

Front view

Mated Connector Lengths

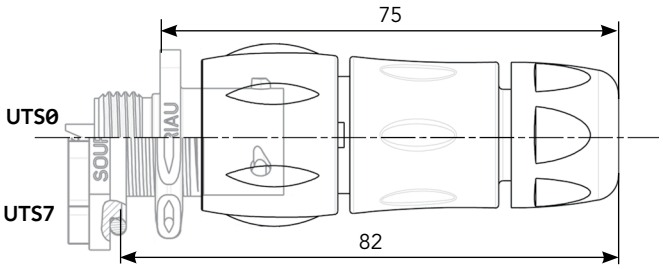

Panel Cut Out

Square Flange Receptacle - UTS0

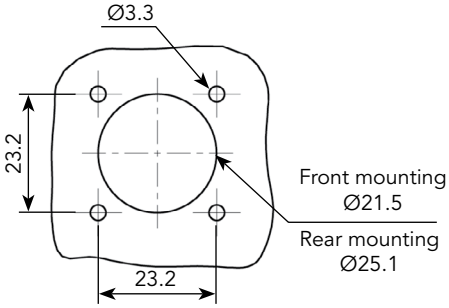

Jam Nut Receptacle - UTS7

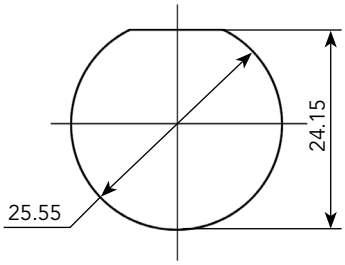

Drilling Pattern

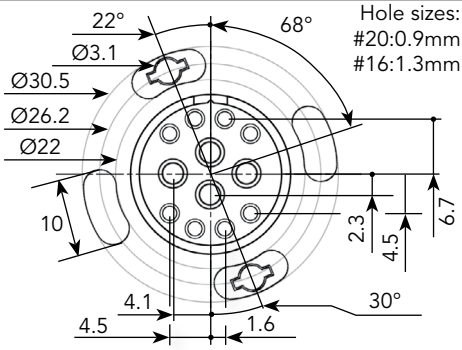

Note: Overmoulded cable assembly dimensions available page 179.

Note: all dimensions are in mm

14E12/14D12 (Shell size 14, 8x#20, 4x#16)

Accessories and Tooling

Jam Nut Sealing Caps

IP68/69K

Part number
UTS14DCG

IP68/69K Metal terminal

Part number
UTS14DCGR

Plug Sealing Cap

IP68/69K

Part number
UTS614DCG

Square Flange Sealing Cap

IP68/69K Metal terminal

Part number
UTS14DCGE

Plastic Protective Cap

Part numbers	
Receptacle cap	Plug cap
85005588A	85005597

Gasket

Part numbers
UTFD14B

Color Coding Rings

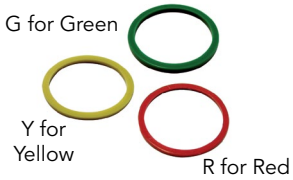

Part numbers	
Receptacles	Plugs
UTS714CCRR	UTS614CCRR
UTS714CCRY	UTS614CCRY
UTS714CCRG	UTS614CCRG

14E12/14D12 (Shell size 14, 8x#20, 4x#16)

Contacts

#16	Contact type	Plating	Cable acceptance (AWG)	Wire stripping length
Handsolder	Loaded in the connector	Min 0.4µ gold over 0.8µ Ni	18 to 14	5.0 mm
PCB	Machined (1)	Min 0.4µ gold over 0.8µ Ni	-	-

#20	Contact type	Plating	Cable acceptance (AWG)	Wire stripping length
Handsolder	Loaded in the connector	Min 0.4µ gold over 0.8µ Ni	22 to 18	3.8 mm
PCB	Machined (1)	Min 0.4µ gold over 0.8µ Ni	-	-

(1): For dimensions see page 169

Electrical Characteristics

UL
4.5A 250V UL94 HB

CSA
4.5A 250V UL94 HB

IEC
4A 50V 1.5kV 3

UTS 14E12/14D12 Derating Curves

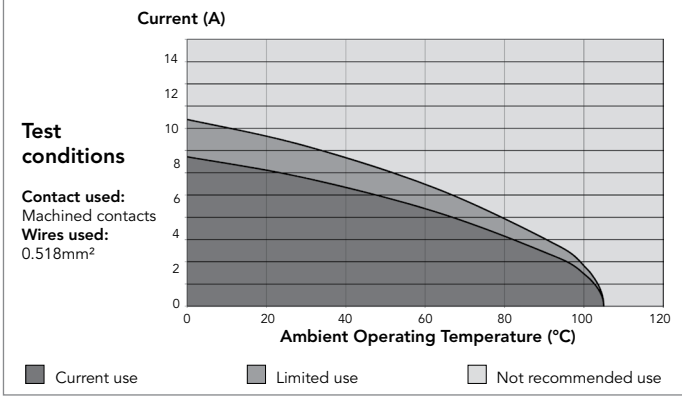

1492 (Shell size 14, 12x#16)

Connector Part Numbers

Contact type	Connector type	Backshell	Part number	
			Male insert	Female insert
Crimp contacts supplied separately see page 127	Square flange receptacle	Without (Fig. 1)	**UTS01492P**	**UTS01492S**
	Free hanging receptacle	Cable gland and grommet (Fig. 2)	**UTS1GJC1492P**	**-**
	Free hanging receptacle	Nut and grommet (Fig. 3)	**UTS1GN1492P**	**-**
	Free hanging receptacle	Cable gland (Fig. 2)	**UTS1JC1492P**	**UTS1JC1492S**
	Plug	Without (Fig. 4)	**UTS61492P**	**UTS61492S**
	Plug	Cable gland and grommet (Fig. 5)	**-**	**UTS6GJC1492S**
	Plug	Nut and grommet (Fig. 6)	**-**	**UTS6GN1492S**
	Plug	Cable gland (Fig. 5)	**UTS6JC1492P**	**UTS6JC1492S**
	Jam nut receptacle	Without (Fig. 7)	**UTS71492P**	**UTS71492S**
	Jam nut receptacle	Cable gland and grommet (Fig. 9)	**UTS7GJC1492P**	**-**
	Jam nut receptacle	Nut and grommet (Fig. 8)	**UTS7GN1492P**	**-**
PCB contacts supplied separately see page 127	Square flange receptacle	Without (Fig. 1)	**UTS01492P**	**UTS01492S**
	Jam nut receptacle	Without (Fig. 7)	**UTS71492P**	**UTS71492S**

Possibilities of discrimination/keying methods see page 208

1492 (Shell size 14, 12x#16)

Dimensions

Square Flange Receptacle - UTS0

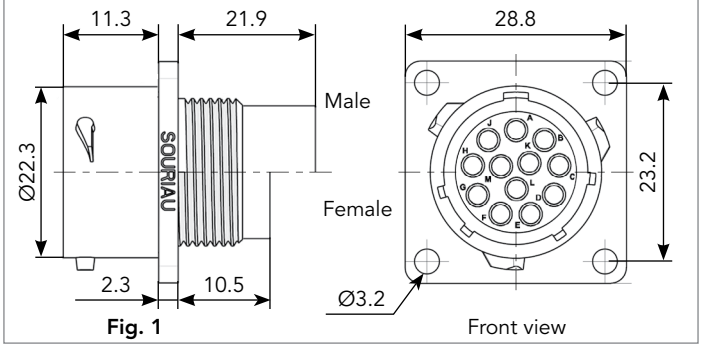

Fig. 1

Free Hanging - UTS1

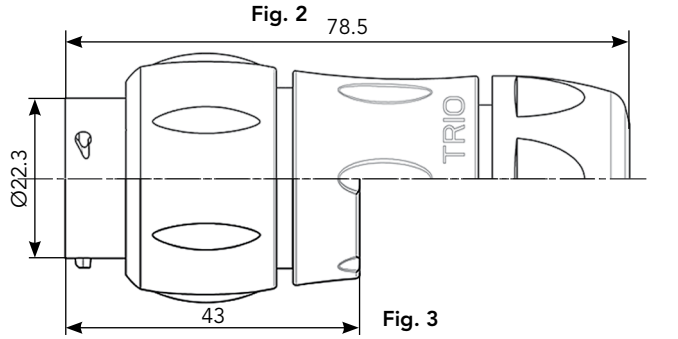

Fig. 2

Fig. 3

Plug - UTS6

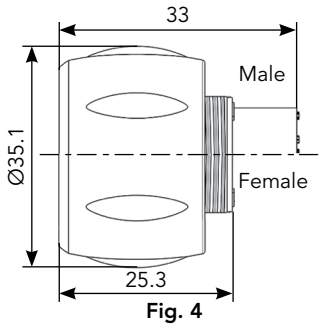

Fig. 4

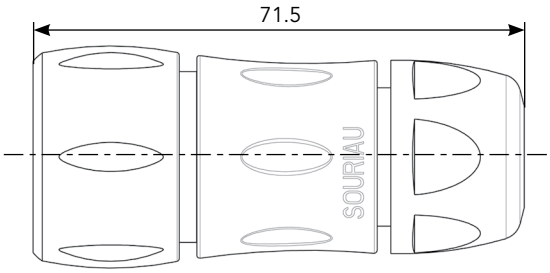

Fig. 5

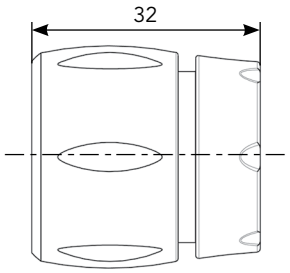

Fig. 6

Jam Nut Receptacle - UTS7

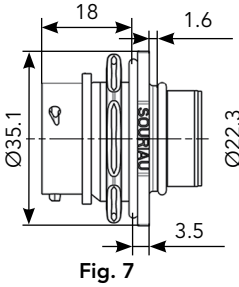

Fig. 7

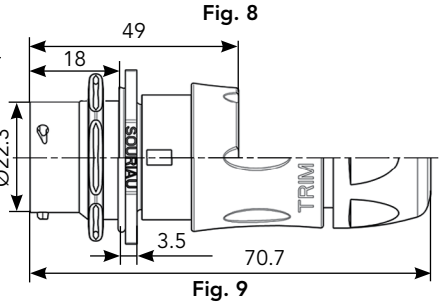

Fig. 8

Fig. 9

Mated Connector Lengths

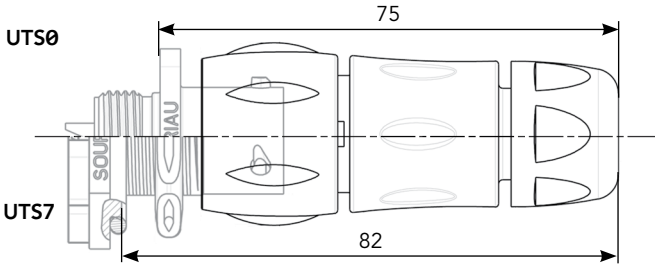

Panel Cut Out

Square Flange Receptacle - UTS0

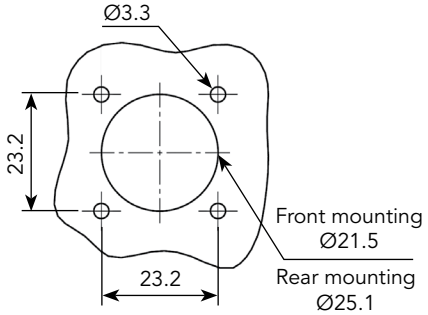

Jam Nut Receptacle - UTS7

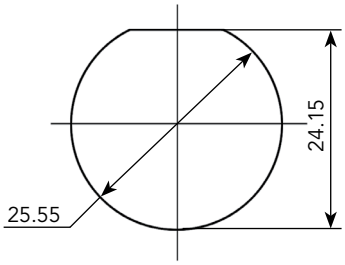

Drilling Pattern

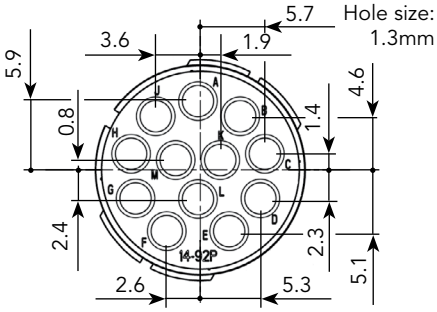

Note: all dimensions are in mm

1492 (Shell size 14, 12x#16)

Accessories and Tooling

Jam Nut Sealing Caps

IP68/69K

Part number
UTS14DCG

IP68/69K Metal terminal

Part number
UTS14DCGR

Handle (without Head)

Part number
SHANDLES

Tool Kit

Part number
TOOLKIT

Plug Sealing Cap

IP68/69K

Part number
UTS614DCG

Square Flange Sealing Cap

IP68/69K Metal terminal

Part number
UTS14DCGE

Plastic Protective Cap

Part numbers	
Receptacle cap	Plug cap
85005588A	85005597

Gasket

Part numbers
UTFD14B

Color Coding Rings

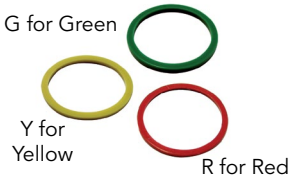

Part numbers	
Receptacles	Plugs
UTS714CCRR	UTS614CCRR
UTS714CCRY	UTS614CCRY
UTS714CCRG	UTS614CCRG

Crimp Tooling (without Shandles)

Contacts	Contact size	Part number of head
RM/RC 28M1K(1)	Standard contacts #16 Ø 1.6mm	S16RCM20*
RM/RC 24M9K(1)		S16RCM20*
RM/RC 20M13K(1)		S16RCM20*
RM/RC 20M12K(1)		S16RCM20*
RM/RC 16M23K(1)		S16RCM16*
RM/RC 14M30K(1)		S16RCM14*
SM/SC 24ML1TK6(1)		S16SCM20*
SM/SC 20ML1TK6(1)		S16SCM20*
SM/SC 16ML1TK6(1)		S16SCML1*
SM/SC 14ML1TK6(1)		S16SCML1*
SM/SC 16ML11TK6(1)		S16SCML11*
RMDXK10D28K	Coaxial contacts	M10S1J with die set & stop bushing see page 200 to 204
RCDXK1D28K		
RM/RC DX60xxD28K		
RM/RC DXK10D28 + york090		
RM/RC DX60xxD28		

(1): Example of plating, for other plating options see page 164
* Heads to be used with handle PN: SHANDLES

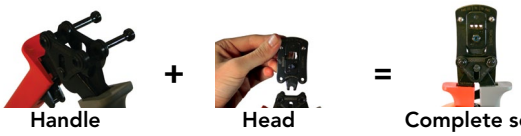

Handle Head Complete set

1492 (Shell size 14, 12x#16)

Contacts

#16	Contact type	AWG	Part number		Max wire Ø	Max insulator Ø
			Male	Female		
Crimp	Machined	30-28	RM28M1K(1)	RC28M1K(1)	0.55	1.00
		26-24	RM24M9K(1)	RC24M9K(1)	0.80	1.60
		22-20	RM20M13K(1)	RC20M13K(1)	1.15	1.80
		22-20	RM20M12K(1)	RC20M12K(1)	1.15	2.20
		20-16	RM16M23K(1)	RC16M23K(1)	1.80	3.20
		16-14	RM14M30K(1)	RC14M30K(1)	2.30	3.20
	Stamped & Formed reeled contacts See note (2) for loose piece	26-24	SM24M1TK6(1)(2)	SC24M1TK6(1)(2)	-	0.90-1.60
		22-20	SM20M1TK6(1)(2)	SC20M1TK6(1)(2)	-	1.20-2.10
		18-16	SM16M1TK6(1)(2)	SC16M1TK6(1)(2)	-	3.20
		18-16	SM16M11TK6(1)(2)	SC16M11TK6(1)(2)	-	3.00
		14	SM14M1TK6(1)(2)	SC14M1TK6(1)(2)	-	3.20
PCB	Machined (3)	-	RM20M12E83K(1)	RC20M12E84K(1)	-	-
Coaxial	Cable Multipiece	see pages 167, 200 to 206	RMDXK10D28	RCDXK1D28	-	-
	Cable Monocrimp		RMDX60xxD28	RCDX60xxD28	-	-
	Twisted pair Multipiece		RMDXK10D28 + york090	RCDXK1D28 + york090	-	-
	Twisted pair Monocrimp		RMDX60xxD28	RCDX60xxD28	-	-
Fiber optic	POF contacts (Plastic Optical Fiber)	-	RMPOF1000	RCPOF1000B	-	-
Hand-solder	Loaded in the connector	14-18	-	-		

(1): Example of plating, for other plating see page 164 (2): Loose piece contact available if putting L. Example: SM20ML1TK6 (3): For dimensions see page 168 Note: all dimensions are in mm

Electrical Characteristics

UL
10A 600V UL94 V-0

CSA
7A 600V UL94 V-0

IEC
10A 63V 1.5kV 3

UTS 1492 Derating Curves

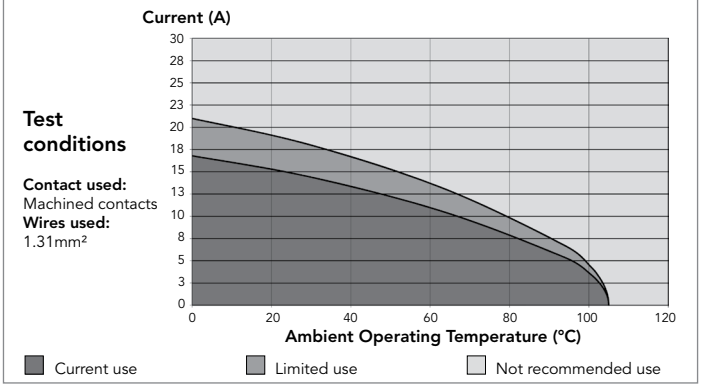

12E14/12D14 (Shell size 12, 14x#20)

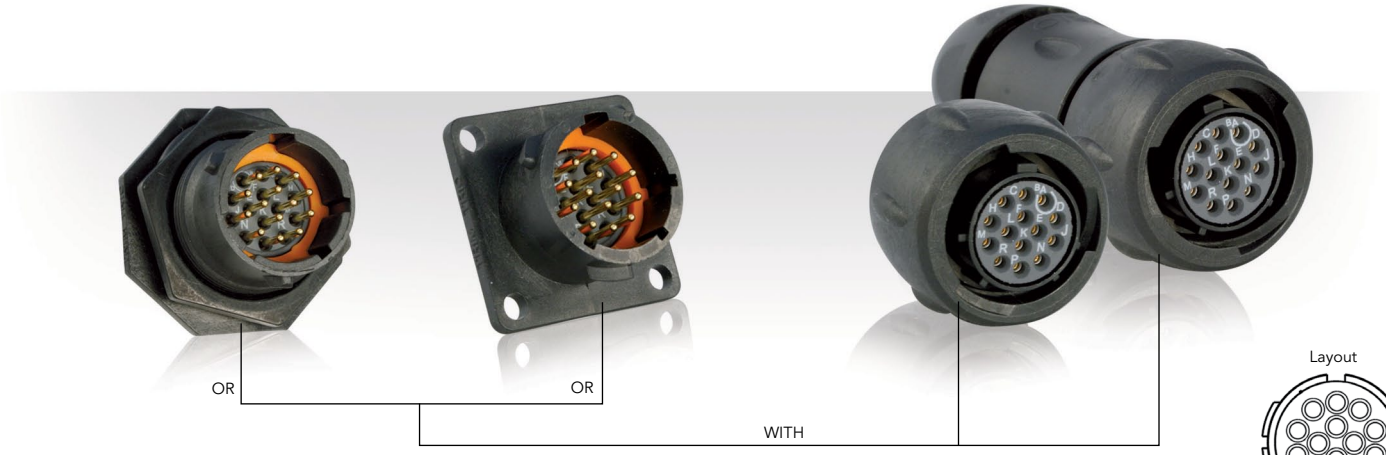

Layout

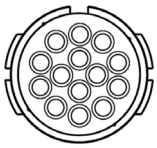

Connector Part Numbers

Contact type	Connector type	Backshell	Part number	
			Male insert	Female insert
Handsolder electrical contacts loaded see page 131	Square flange receptacle	Without (Fig. 6)	UTS012E14P	UTS012E14S
	Plug	Without (Fig. 1)	UTS612E14P	UTS612E14S
		Cable gland (Fig. 2)	UTS6JC12E14P	UTS6JC12E14S
	Jam nut receptacle	Without (Fig. 3)	UTS712E14P	UTS712E14S
PCB contacts loaded see page 131	Square flange receptacle	Without (Fig. 7)	UTS012D14P	UTS012D14S
	Jam nut receptacle with stand off and with hold down clips	Without (Fig. 4)	UTS712D14P32	UTS712D14S32
	Jam nut receptacle with stand off and without hold down clip	Without (Fig. 5)	UTS712D14P	UTS712D14S

Possibilities of discrimination/keying methods see page 208

Sealed unmated

Overmoulded Cable Assembly Part Numbers

Overmoulding type	Connector type	Wire size (mm²)	Harmonized cable part number (1)	Part number (length: 1m.)*	
				Male plug	Female plug
Straight ending	Plug	0.5	H05 VV - F 14x0.5	HAUTS0V12E14PST100	HAUTS0V12E14SST100
Right angle ending	Plug	0.5	H05 VV - F 14x0.5	HAUTS0V12E14PRA100	HAUTS0V12E14SRA100

(1) Other cable available on demand

* Other lengths available on demand

12E14/12D14 (Shell size 12, 14x#20)

Dimensions

Plug - UTS6

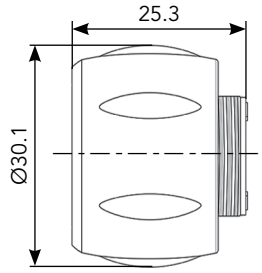

Fig. 1

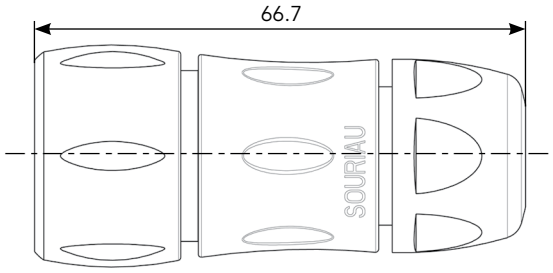

Fig. 2

Jam Nut Receptacle - UTS7

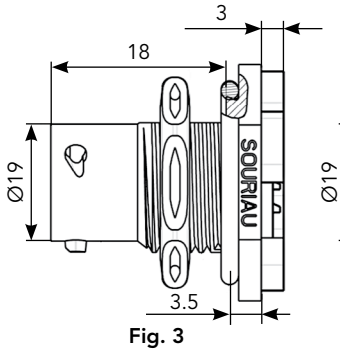

Fig. 3

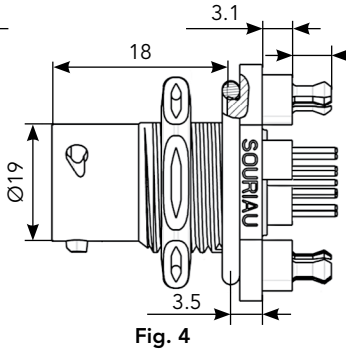

Fig. 4

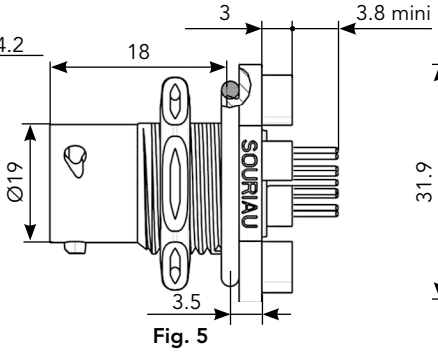

Fig. 5

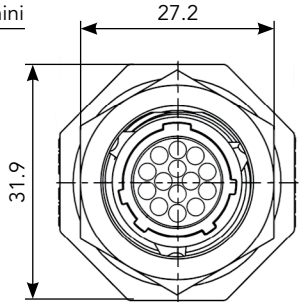

Front view

Square Flange Receptacle - UTS0

Fig. 7

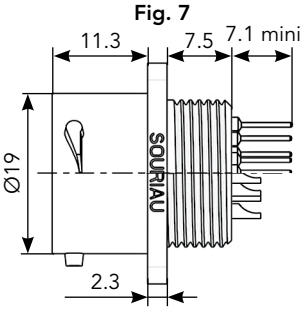

Fig. 6

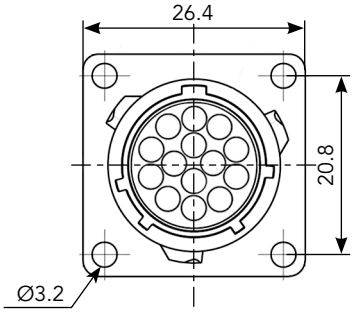

Front view

Mated Connector Lengths

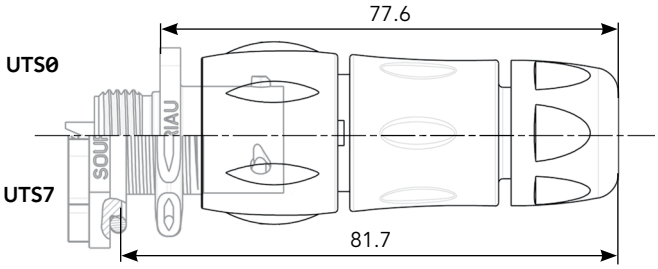

Panel Cut Out

Square Flange Receptacle - UTS0

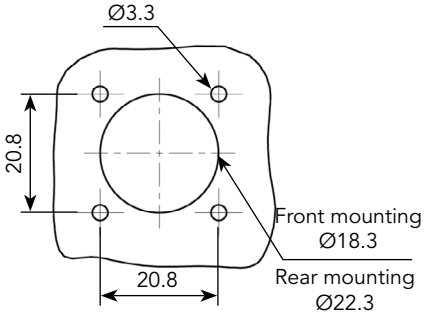

Jam Nut Receptacle - UTS7

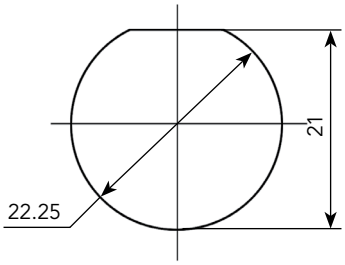

Drilling Pattern

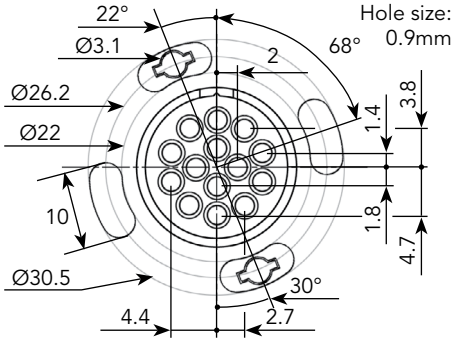

Note: Overmoulded cable assembly dimensions available page 179.

Note: all dimensions are in mm

12E14/12D14 (Shell size 12, 14x#20)

Accessories and Tooling

Jam Nut Sealing Caps

IP68/69K

Part number
UTS12DCG

IP68/69K Metal terminal

Part number
UTS12DCGR

Plug Sealing Cap

IP68/69K

Part number
UTS612DCG

Square Flange Sealing Cap

IP68/69K Metal terminal

Part number
UTS12DCGE

Plastic Protective Cap

Part numbers	
Receptacle cap	Plug cap
85005587A	85005596

Gasket

Part numbers
UTFD13B

Color Coding Rings

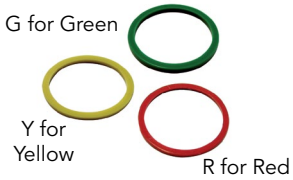

Part numbers	
Receptacles	Plugs
UTS712CCRR	UTS612CCRR
UTS712CCRY	UTS612CCRY
UTS712CCRG	UTS612CCRG

12E14/12D14 (Shell size 12, 14x#20)

Contacts

#20	Contact type	Plating	Cable acceptance (AWG)	Wire stripping length
Handsolder	Loaded in the connector	Min 0.4µ gold over 0.8µ Ni	22 to 18	5 mm
PCB	Machined (1)	Min 0.4µ gold over 0.8µ Ni	-	-

(1): For dimensions see page 169

Electrical Characteristics

UL
4.5A 250V UL94 HB

CSA
4.5A 250V UL94 HB

IEC
5A 32V 1.5kV 3

UTS 12E14/12D14 Derating Curves

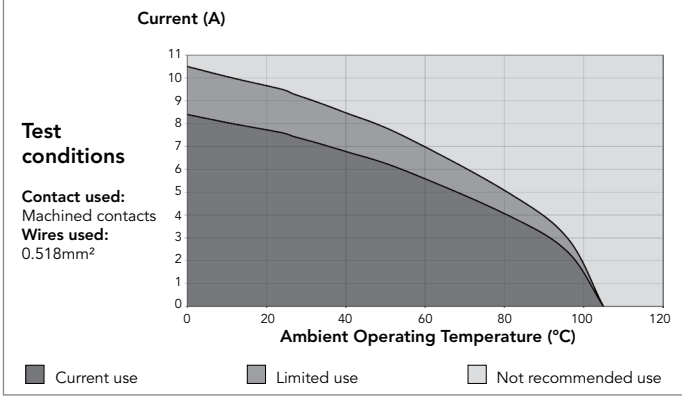

14E15/14D15 (Shell size 14, 14x#20, 1x#16)

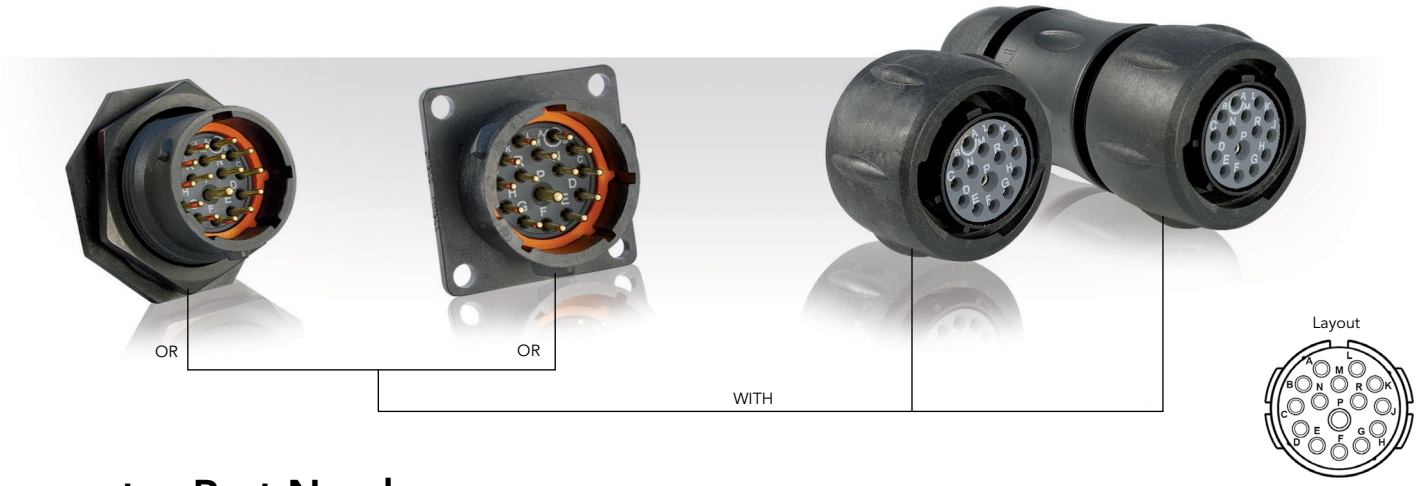

Connector Part Numbers

Contact type	Connector type	Backshell	Part number	
			Male insert	Female insert
Handsolder electrical contacts loaded see page 135	Square flange receptacle	Without (Fig. 6)	UTS014E15P	UTS014E15S
	Plug	Without (Fig. 1)	UTS614E15P	UTS614E15S
		Cable gland (Fig. 2)	UTS6JC14E15P	UTS6JC14E15S
	Jam nut receptacle	Without (Fig. 3)	UTS714E15P	UTS714E15S
PCB contacts loaded see page 135	Square flange receptacle	Without (Fig. 7)	UTS014D15P	UTS014D15S
	Jam nut receptacle with stand off and with hold down clips	Without (Fig. 4)	UTS714D15P32	UTS714D15S32
	Jam nut receptacle with stand off and without hold down clip	Without (Fig. 5)	UTS714D15P	UTS714D15S

Possibilities of discrimination/keying methods see page 208

Sealed unmated

Overmoulded Cable Assembly Part Numbers

Overmoulding type	Connector type	Wire size (mm²)	Harmonized cable part number (1)	Part number (length: 1m.)*	
				Male plug	Female plug
Straight ending	Plug	1.5	H05 VV - F 15x1.5	HAUTS0V14E15PST100	HAUTS0V14E15SST100
Right angle ending	Plug	1.5	H05 VV - F 15x1.5	HAUTS0V14E15PRA100	HAUTS0V14E15SRA100

(1) Other cable available on demand

* Other lengths available on demand

14E15/14D15 (Shell size 14, 14x#20, 1x#16)

Dimensions

Plug - UTS6

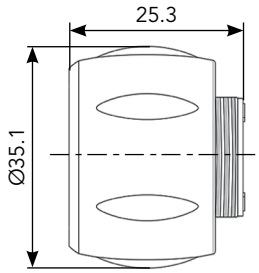

Fig. 1

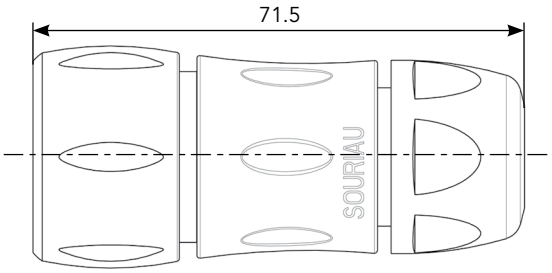

Fig. 2

Jam Nut Receptacle - UTS7

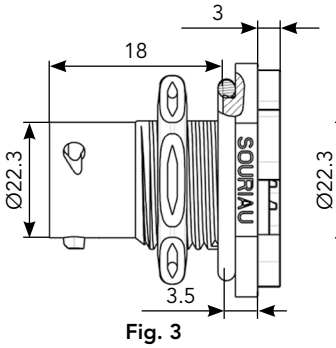

Fig. 3

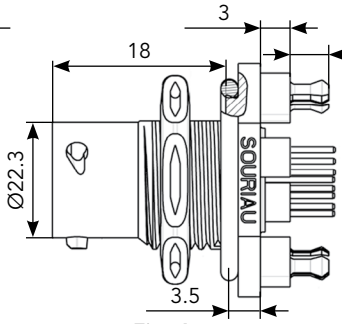

Fig. 4

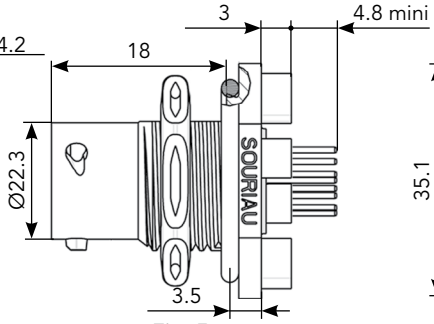

Fig. 5

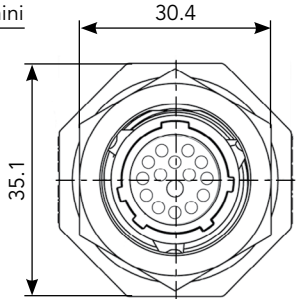

Front view

Square Flange Receptacle - UTS0

Fig. 7

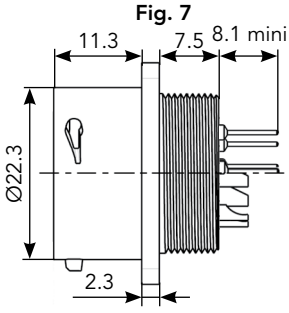

Fig. 6

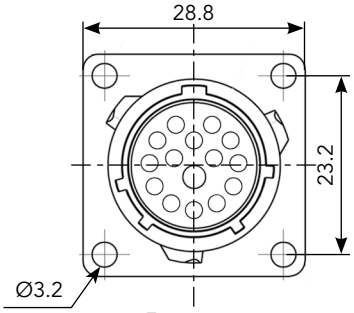

Front view

Mated Connector Lengths

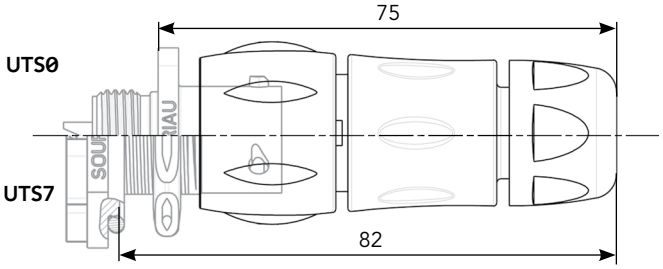

Panel Cut Out

Square Flange Receptacle - UTS0

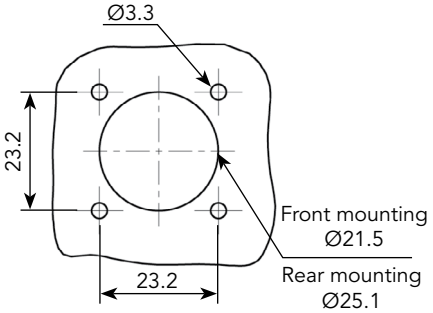

Jam Nut Receptacle - UTS7

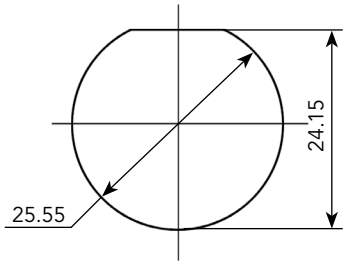

Drilling Pattern

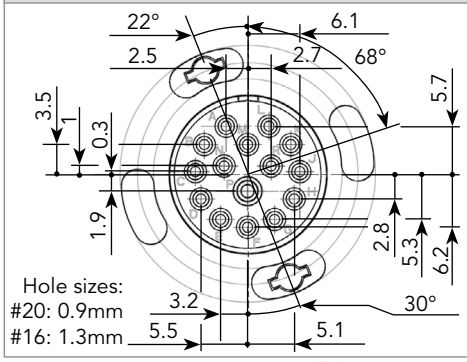

Note: Overmoulded cable assembly dimensions available page 179.

Note: all dimensions are in mm

14E15/14D15 (Shell size 14, 14x#20, 1x#16)

Accessories and Tooling

Jam Nut Sealing Caps

IP68/69K

Part number
UTS14DCG

IP68/69K Metal terminal

Part number
UTS14DCGR

Plug Sealing Cap

IP68/69K

Part number
UTS614DCG

Square Flange Sealing Cap

IP68/69K Metal terminal

Part number
UTS14DCGE

Plastic Protective Cap

Part numbers	
Receptacle cap	Plug cap
85005588A	85005597

Gasket

Part numbers
UTFD14B

Color Coding Rings

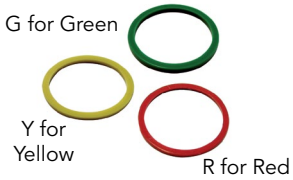

Part numbers	
Receptacles	Plugs
UTS714CCRR	UTS614CCRR
UTS714CCRY	UTS614CCRY
UTS714CCRG	UTS614CCRG

14E15/14D15 (Shell size 14, 14x#20, 1x#16)

Contacts

#16	Contact type	Plating	Cable acceptance (AWG)	Wire stripping length
Handsolder	Loaded in the connector	Min 0.4µ gold over 0.8µ Ni	18 to 14	5.0 mm
PCB	Machined (1)	Min 0.4µ gold over 0.8µ Ni	-	-

#20	Contact type	Plating	Cable acceptance (AWG)	Wire stripping length
Handsolder	Loaded in the connector	Min 0.4µ gold over 0.8µ Ni	22 to 18	3.8 mm
PCB	Machined (1)	Min 0.4µ gold over 0.8µ Ni	-	-

(1): For dimensions see page 169

Electrical Characteristics

UL
12A 600V UL94 HB

CSA
12A 600V UL94 HB

IEC
4A 50V 1.5kV 3

UTS 14E15/14D15 Derating Curves

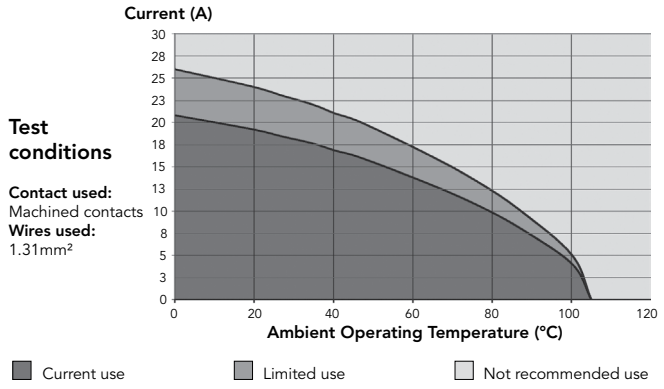

14E18/14D18 (Shell size 14, 18x#20)

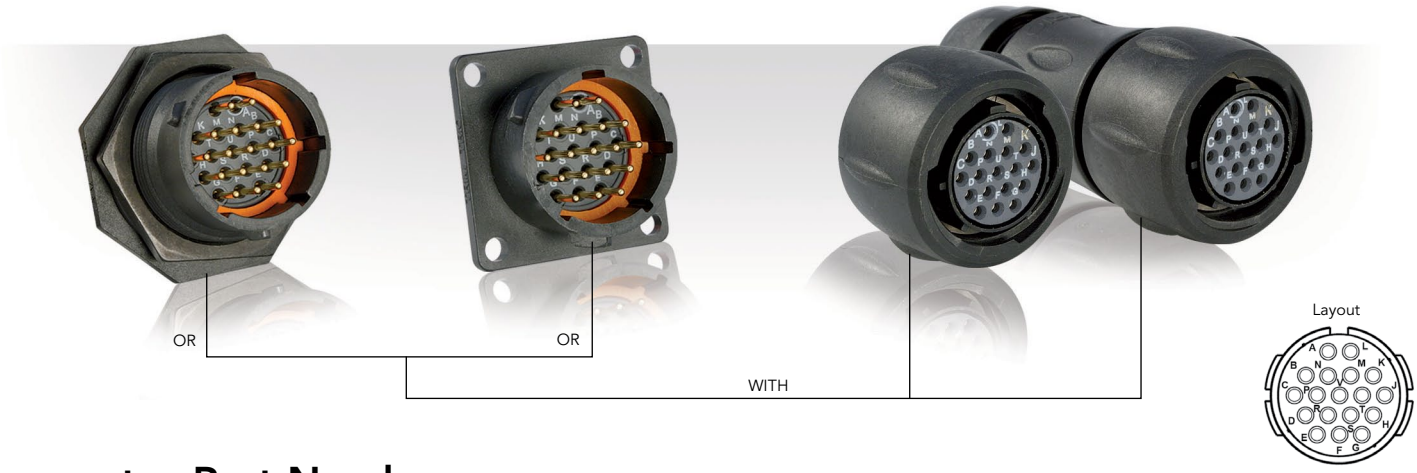

Connector Part Numbers

Contact type	Connector type	Backshell	Part number	
			Male insert	Female insert
Handsolder electrical contacts loaded see page 139	Square flange receptacle	Without (Fig. 6)	UTS014E18P	UTS014E18S
	Plug	Without (Fig. 1)	UTS614E18P	UTS614E18S
		Cable gland (Fig. 2)	UTS6JC14E18P	UTS6JC14E18S
	Jam nut receptacle	Without (Fig. 3)	UTS714E18P	UTS714E18S
PCB contacts loaded see page 139	Square flange receptacle	Without (Fig. 7)	UTS014D18P	UTS014D18S
	Jam nut receptacle with stand off and with hold down clips	Without (Fig. 4)	UTS714D18P32	UTS714D18S32
	Jam nut receptacle with stand off and without hold down clip	Without (Fig. 5)	UTS714D18P	UTS714D18S

Possibilities of discrimination/keying methods see page 208

Sealed unmated

Overmoulded Cable Assembly Part Numbers

Overmoulding type	Connector type	Wire size (mm²)	Harmonized cable part number (1)	Part number (length: 1m.)*	
				Male plug	Female plug
Straight ending	Plug	0.5	H05 VV - F 18x0.5	HAUTS0V14E18PST100	HAUTS0V14E18SST100
Right angle ending	Plug	0.5	H05 VV - F 18x0.5	HAUTS0V14E18PRA100	HAUTS0V14E18SRA100

(1) Other cable available on demand

* Other lengths available on demand

14E18/14D18 (Shell size 14, 18x#20)

Dimensions

Plug - UTS6

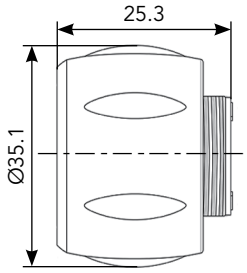

Fig. 1

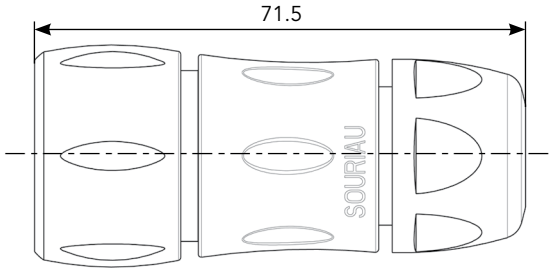

Fig. 2

Jam Nut Receptacle - UTS7

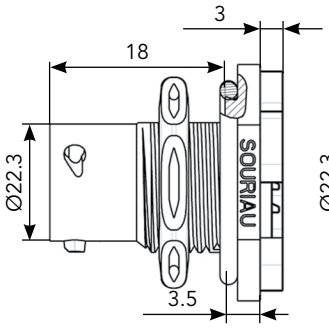

Fig. 3

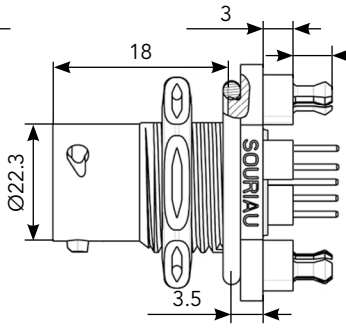

Fig. 4

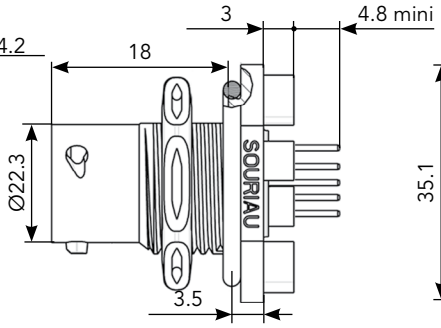

Fig. 5

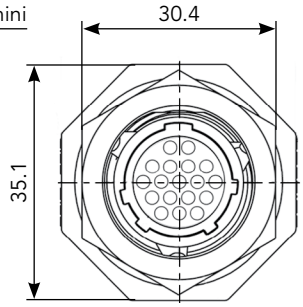

Front view

Square Flange Receptacle - UTS0

Fig. 7

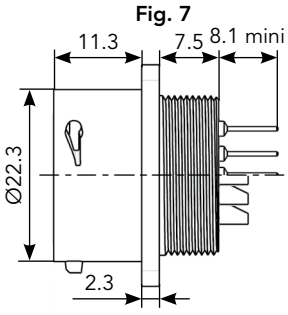

Fig. 6

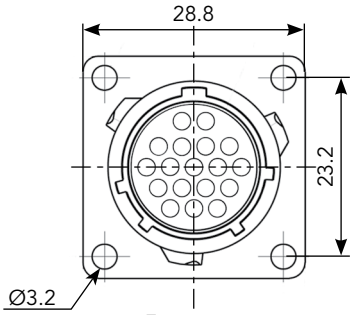

Front view

Mated Connector Lengths

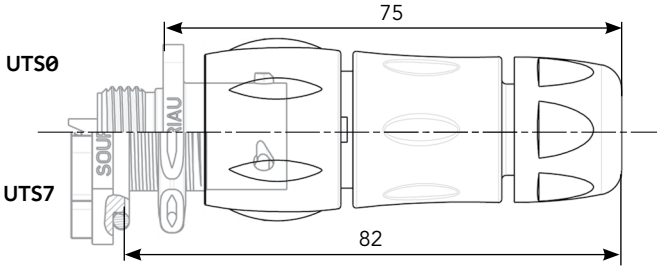

Panel Cut Out

Square Flange Receptacle - UTS0

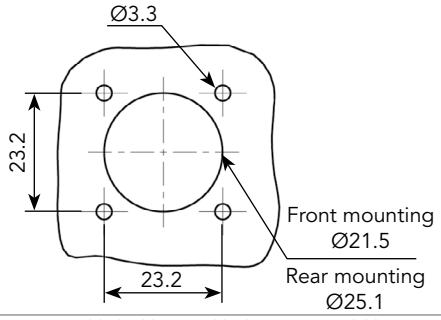

Jam Nut Receptacle - UTS7

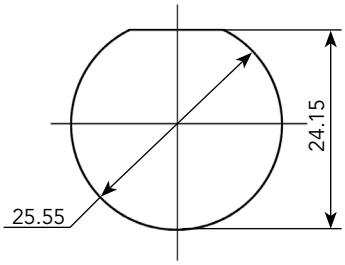

Drilling Pattern

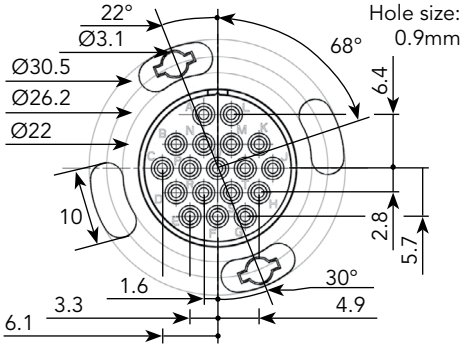

Note: Overmoulded cable assembly dimensions available page 179.

Note: all dimensions are in mm

14E18/14D18 (Shell size 14, 18x#20)

Accessories and Tooling

Jam Nut Sealing Caps

IP68/69K

Part number
UTS14DCG

IP68/69K Metal terminal

Part number
UTS14DCGR

Plug Sealing Cap

IP68/69K

Part number
UTS614DCG

Square Flange Sealing Cap

IP68/69K Metal terminal

Part number
UTS14DCGE

Plastic Protective Cap

Part numbers	
Receptacle cap	Plug cap
85005588A	85005597

Gasket

Part numbers
UTFD14B

Color Coding Rings

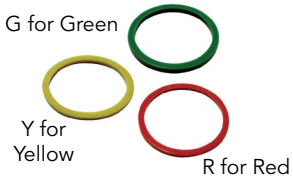

Part numbers	
Receptacles	Plugs
UTS714CCRR	UTS614CCRR
UTS714CCRY	UTS614CCRY
UTS714CCRG	UTS614CCRG

14E18/14D18 (Shell size 14, 18x#20)

Contacts

#20	Contact type	Plating	Cable acceptance (AWG)	Wire stripping length
Handsolder	Loaded in the connector	Min 0.4µ gold over 0.8µ Ni	22 to 18	5 mm
PCB	Machined (1)	Min 0.4µ gold over 0.8µ Ni	-	-

(1): For dimensions see page 169

Electrical Characteristics

UL
4A 250V UL94 HB

CSA
4A 250V UL94 HB

IEC
5A 50V 1.5kV 3

UTS 14E18/14D18 Derating Curves

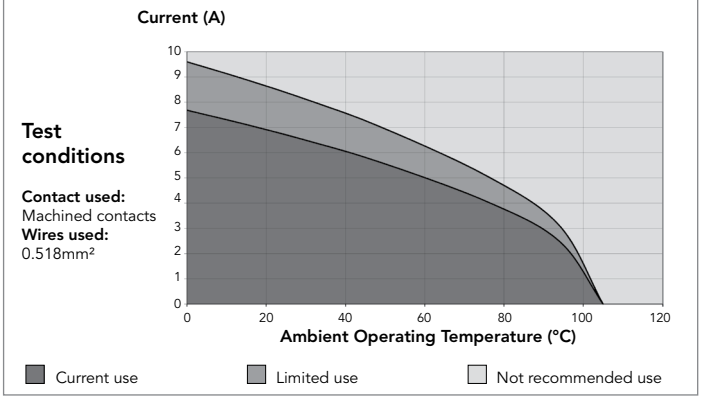

1419 - 14E19/14D19 (Shell size 14, 19x#20)

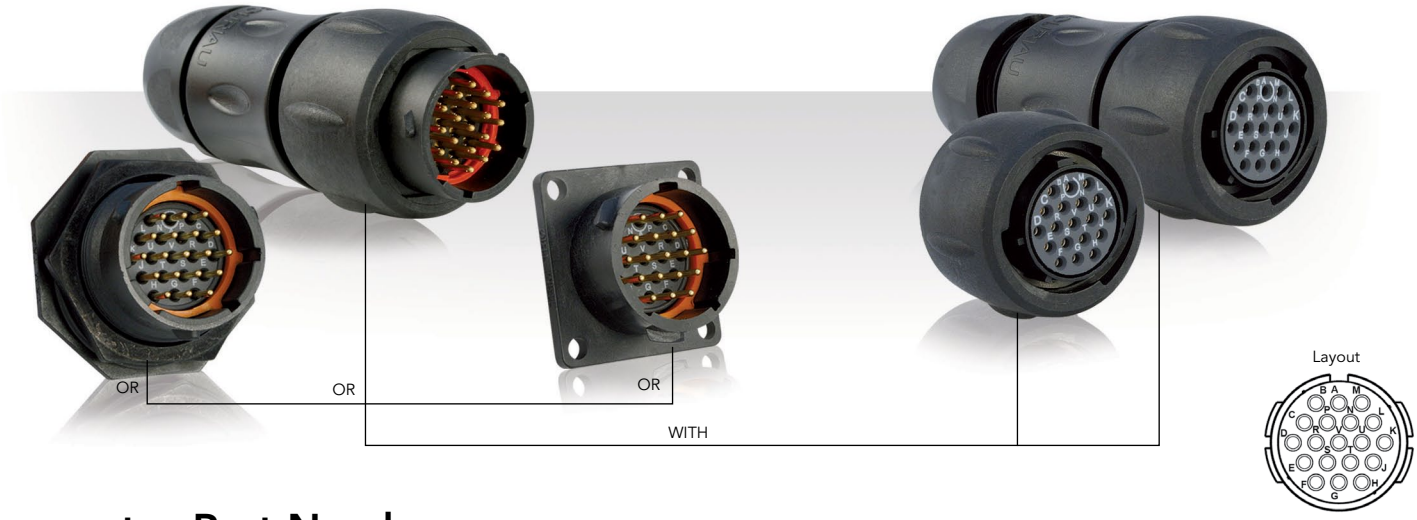

Connector Part Numbers

Contact type	Connector type	Backshell	Part number	
			Male insert	Female insert
Crimp contacts supplied separately see page 143	Free hanging receptacle	Cable gland (Fig. 1)	UTS1JC1419P	UTS1JC1419S
	Plug	Without (Fig. 2)	UTS61419P	UTS61419S
	Plug	Cable gland (Fig. 3)	UTS6JC1419P	UTS6JC1419S
	Jam nut receptacle	Without (Fig. 4)	UTS71419P	UTS71419S
PCB contacts supplied separately see page 143	Jam nut receptacle	Without (Fig. 4)	UTS71419P	UTS71419S
Handsolder electrical contacts loaded see page 143	Square flange receptacle	Without (Fig. 8)	UTS014E19P	UTS014E19S
	Plug	Without (Fig. 2)	UTS614E19P	UTS614E19S
		Cable gland (Fig. 3)	UTS6JC14E19P	UTS6JC14E19S
	Jam nut receptacle	Without (Fig. 5)	UTS714E19P	UTS714E19S
PCB contacts loaded see page 143	Square flange receptacle	Without (Fig. 9)	UTS014D19P	UTS014D19S
	Jam nut receptacle with stand off and with hold down clips	Without (Fig. 6)	UTS714D19P32	UTS714D19S32
	Jam nut receptacle with stand off and without hold down clip	Without (Fig. 7)	UTS714D19P	UTS714D19S

Possibilities of discrimination/keying methods see page 208

Sealed unmated

Overmoulded Cable Assembly Part Numbers

Overmoulding type	Connector type	Wire size (mm²)	Harmonized cable part number (1)	Part number (length: 1m.)*	
				Male plug	Female plug
Straight ending	Plug	0.5	H05 VV - F 19x0.5	HAUTS0V1419PST100	HAUTS0V1419SST100
				HAUTS0V14E19PST100	HAUTS0V14E19SST100
Right angle ending	Plug	0.5	H05 VV - F 19x0.5	HAUTS0V1419PRA100	HAUTS0V1419SRA100
				HAUTS0V14E19PRA100	HAUTS0V14E19SRA100

(1) Other cable available on demand

* Other lengths available on demand

1419 - 14E19/14D19 (Shell size 14, 19x#20)

Dimensions

Free Hanging - UTS1

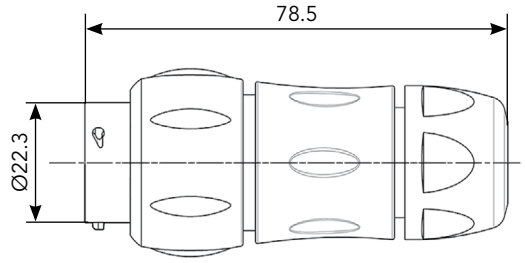

Fig. 1

Plug - UTS6

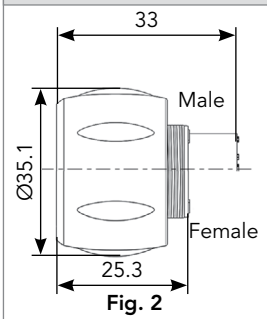

Fig. 2

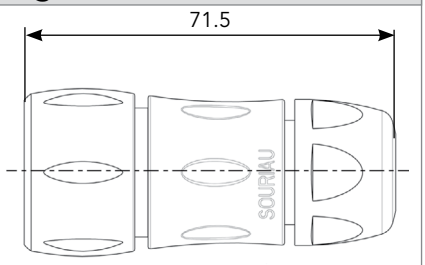

Fig. 3

Jam Nut Receptacle - UTS7

Fig. 4

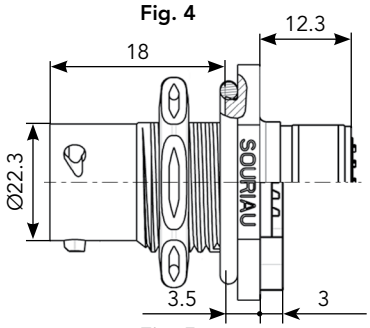

Fig. 5

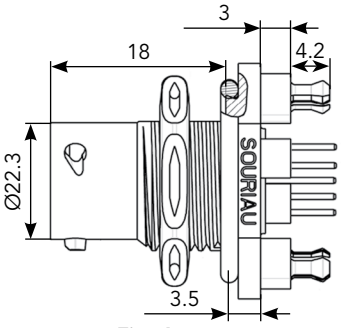

Fig. 6

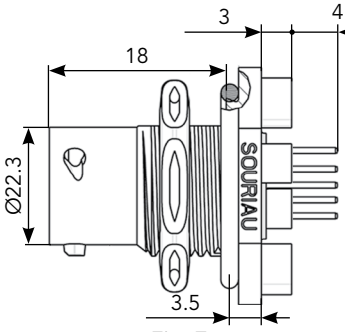

Fig. 7

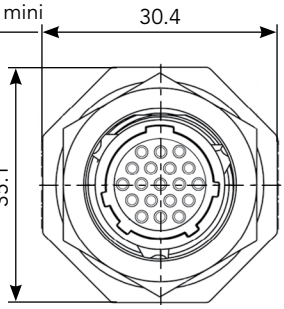

Front view

Square Flange Receptacle - UTS0

Fig. 9

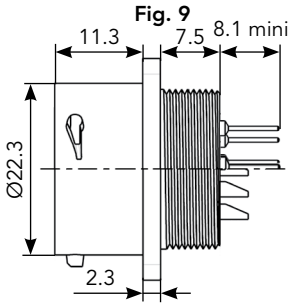

Fig. 8

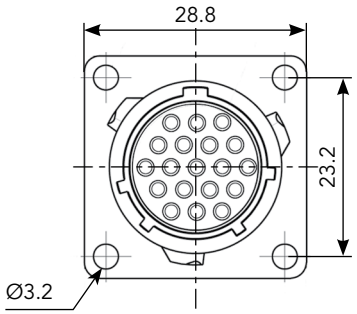

Front view

Mated Connector Lengths

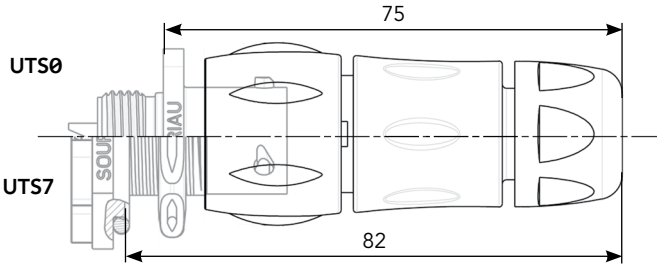

Panel Cut Out

Square Flange Receptacle - UTS0

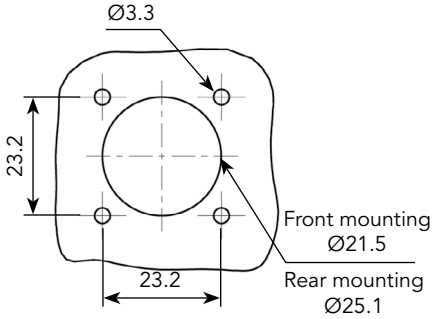

Jam Nut Receptacle - UTS7

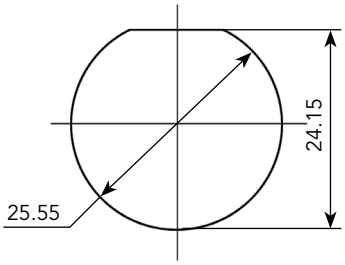

Note: Overmoulded cable assembly dimensions available page 179.

Drilling Pattern

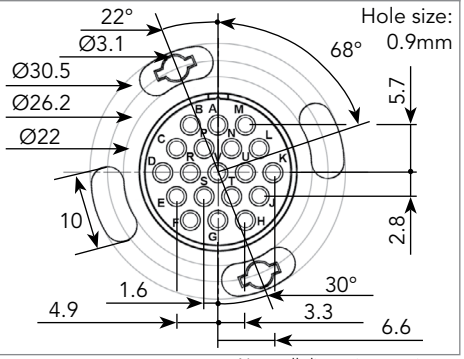

Note: all dimensions are in mm

1419 - 14E19/14D19 (Shell size 14, 19x#20)

Accessories and Tooling

Jam Nut Sealing Caps

IP68/69K

Part number
UTS14DCG

IP68/69K Metal terminal

Part number
UTS14DCGR

Handle (without Head)

Part number
SHANDLES

Tool Kit

Part number
TOOLKIT

Plug Sealing Cap

IP68/69K

Part number
UTS614DCG

Square Flange Sealing Cap

IP68/69K Metal terminal

Part number
UTS14DCGE

Crimp Tooling (without Shandles)

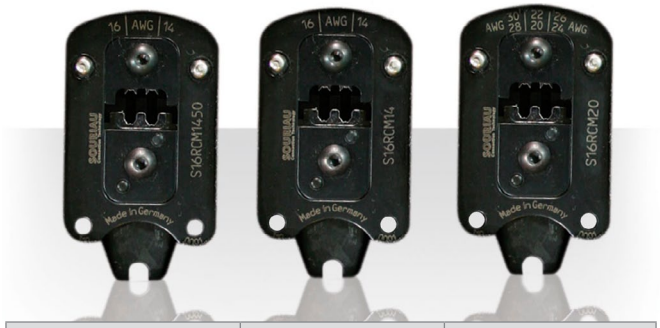

Contacts	Contact size	Part number of head
RM/RC 24W3K(1)	Standard contacts #20 Ø 1mm	S20RCM*
RM/RC 20W3K(1)		S20RCM*
RM/RC 18W3K(1)		S20RCM*
SM/SC 24WL3S		S20SCM20*
SM/SC 20WL3S		S20SCM20*

(1): Example of plating, for other plating see page 164
*: Heads to be used with handle PN: SHANDLES

Handle

+

Head

=

Complete set

Plastic Protective Cap

Part numbers	
Receptacle cap	Plug cap
85005588A	85005597

Gasket

Part numbers
UTFD14B

Color Coding Rings

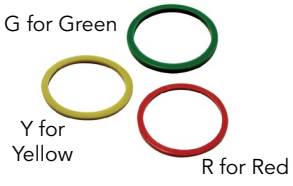

Part numbers	
Receptacles	Plugs
UTS714CCRR	UTS614CCRR
UTS714CCRY	UTS614CCRY
UTS714CCRG	UTS614CCRG

Extraction Tool #20

Part number
RX20D44

1419 - 14E19/14D19 (Shell size 14, 19x#20)

Contacts

#20	Contact type	Wire size		Part number		Max wire Ø	Max insulator Ø	Wire stripping length
		AWG	mm²	Male	Female			
Crimp	Machined	26-24	0.13-0.25	RM24W3K(1)	RC24W3K(1)	0.80	1.60	4.80
		22-20	0.32-0.52	RM20W3K(1)	RC20W3K(1)	1.15	1.60	4.80
		20-18	0.50-0.93	RM18W3K(1)	RC18W3K(1)	1.30	2.10	4.80
	Stamped & Formed reeled contacts See note (2) for loose piece	26-24	0.13-0.25	SM24W3TK6(2)	SC24W3TK6(2)	-	0.90-1.60	4.00
		26-24	0.13-0.25	SM24W3S26(2)	SC24W3S25(2)	-	0.90-1.60	4.00
		22-20	0.32-0.52	SM20W3TK6(2)	SC20W3TK6(2)	-	1.20-2.10	4.00
		22-20	0.32-0.52	SM20W3S26(2)	SC20W3S25(2)	-	1.20-2.10	4.00
PCB	Machined (3)	-	-	RMW5016K	RCW5016K	-	-	-
Hand-solder	Loaded in the connector	22-18	-	-	-	-	-	3.80

(1): Example of plating, for other plating see page 164 (2): Loose piece contact available if putting L. Example: SM20WL3TK6 (3): For dimensions see page 168 Note: all dimensions are in mm

Electrical Characteristics

UTS 1419
UL
5A 250V UL94 V-0

UTS 14E19/14D19
UL
4A 250V UL94 HB

CSA
4A 250V UL94 V-0

CSA
4A 250V UL94 HB

IEC
5A 32V 1.5kV 3

UTS 1419 - 14E19/14D19 Derating Curves

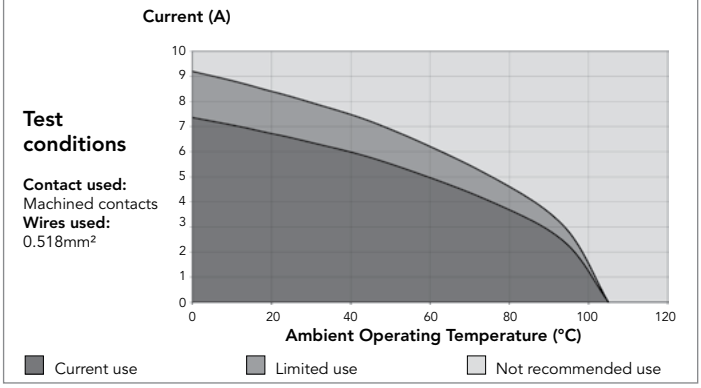

1823 (Shell size 18, 23x#16)

Connector Part Numbers

Contact type	Connector type	Backshell	Part number	
			Male insert	Female insert
Crimp contacts supplied separately see page 147	Square flange receptacle	Without (Fig. 1)	**UTS01823P**	**UTS01823S**
	Free hanging receptacle	Cable gland (Fig. 2)	**UTS1JC1823P**	**UTS1JC1823S**
	Plug	Without (Fig. 3)	**UTS61823P**	**UTS61823S**
	Plug	Cable gland (Fig. 4)	**UTS6JC1823P**	**UTS6JC1823S**
	Jam nut receptacle	Without (Fig. 5)	**UTS71823P**	**UTS71823S**
PCB contacts supplied separately see page 147	Square flange receptacle	Without (Fig. 1)	**UTS01823P**	**UTS01823S**
	Jam nut receptacle	Without (Fig. 5)	**UTS71823P**	**UTS71823S**

Possibilities of discrimination/keying methods see page 208

Overmoulded Cable Assembly Part Numbers

Overmoulding type	Connector type	Wire size (mm²)	Harmonized cable part number (1)	Part number (length: 1m.)*	
				Male plug	Female plug
Straight ending	Plug	1.5	H05 VV - F 23x1.5	**HAUTS0V1823PST100**	**HAUTS0V1823SST100**
Right angle ending	Plug	1.5	H05 VV - F 23x1.5	**HAUTS0V1823PRA100**	**HAUTS0V1823SRA100**

(1) Other cable available on demand

* Other lengths available on demand

1823 (Shell size 18, 23x#16)

Dimensions

Square Flange Receptacle - UTS0

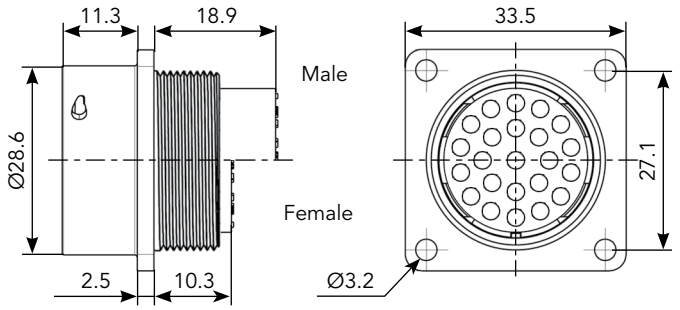

Fig. 1

Free Hanging - UTS1

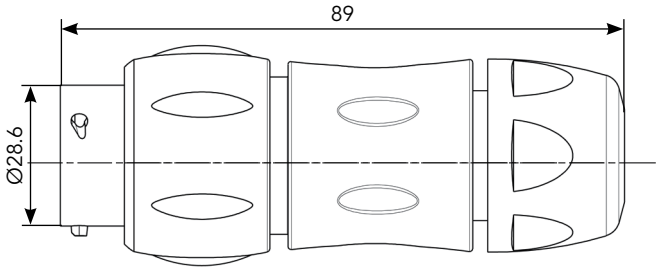

Fig. 2

Plug - UTS6

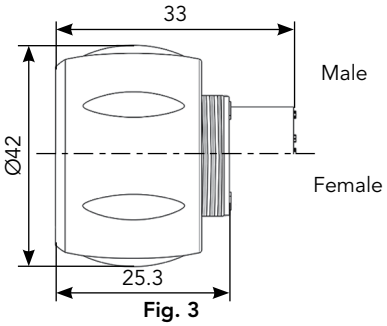

Fig. 3

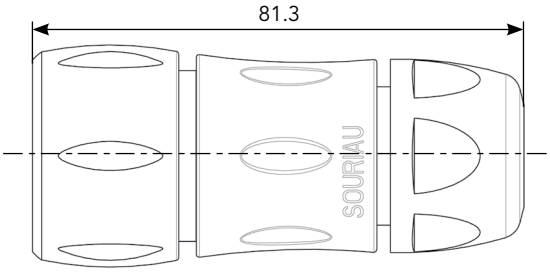

Fig. 4

Jam Nut Receptacle - UTS7

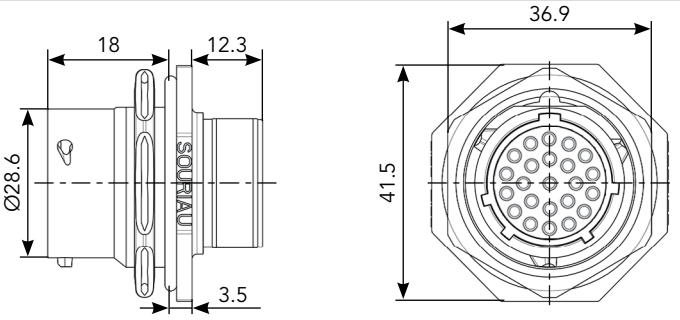

Fig. 5

Mated Connector Lengths

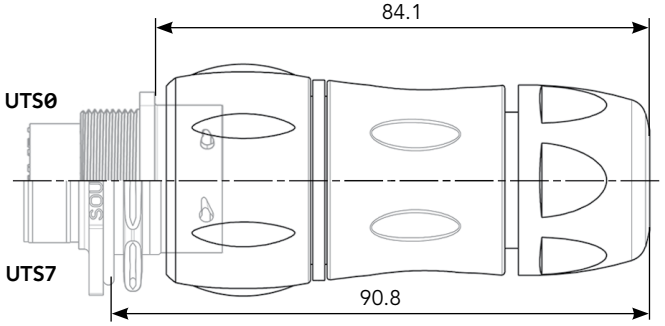

Panel Cut Out

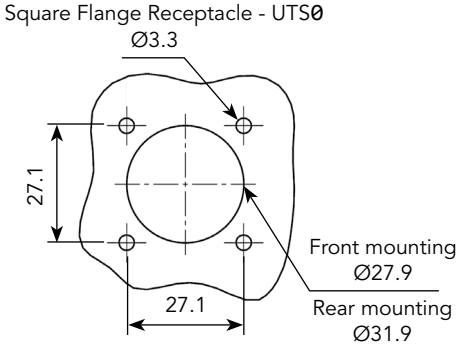

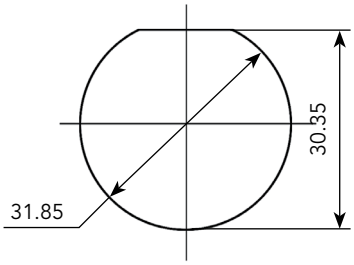

Drilling Pattern

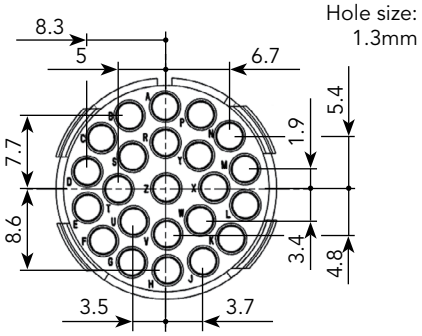

Note: Overmoulded cable assembly dimensions available page 179.

Note: all dimensions are in mm

1823 (Shell size 18, 23x#16)

Accessories and Tooling

Jam Nut Sealing Caps

IP68/69K

Part number
UTS18DCG

IP68/69K Metal terminal

Part number
UTS18DCGR

Handle (without Head)

Part number
SHANDLES

Tool Kit

Part number
TOOLKIT

Plug Sealing Cap

IP68/69K

Part number
UTS618DCG

Square Flange Sealing Cap

IP68/69K Metal terminal

Part number
UTS18DCGE

Plastic Protective Cap

Part numbers	
Receptacle cap	Plug cap
85005590A	85005599

Gasket

Part numbers
UTFD16B

Color Coding Rings

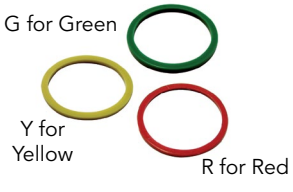

Part numbers	
Receptacles	Plugs
UTS718CCRR	UTS618CCRR
UTS718CCRY	UTS618CCRY
UTS718CCRG	UTS618CCRG

Crimp Tooling (without Shandles)

Contacts	Contact size	Part number of head
RM/RC 28M1K(1)	Standard contacts #16 Ø 1.6mm	S16RCM20*
RM/RC 24M9K(1)		S16RCM20*
RM/RC 20M13K(1)		S16RCM20*
RM/RC 20M12K(1)		S16RCM20*
RM/RC 16M23K(1)		S16RCM16*
RM/RC 14M30K(1)		S16RCM14*
SM/SC 24ML1TK6(1)		S16SCM20*
SM/SC 20ML1TK6(1)		S16SCM20*
SM/SC 16ML1TK6(1)		S16SCML1*
SM/SC 14ML1TK6(1)		S16SCML1*
SM/SC 16ML11TK6(1)		S16SCML11*
RMDXK10D28K	Coaxial contacts	M10S1J with die set & stop bushing see page 200 to 204
RCDXK1D28K		
RM/RC DX60xxD28K		
RM/RC DXK10D28 + york090		
RM/RC DX60xxD28		

(1): Example of plating, for other plating options see page 164
* Heads to be used with handle PN: SHANDLES

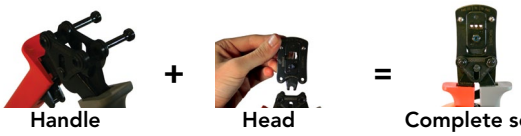

Handle Head Complete set

1823 (Shell size 18, 23x#16)

Contacts

#16	Contact type	AWG	Part number		Max wire Ø	Max insulator Ø
			Male	Female		
Crimp	Machined	30-28	RM28M1K(1)	RC28M1K(1)	0.55	1.00
		26-24	RM24M9K(1)	RC24M9K(1)	0.80	1.60
		22-20	RM20M13K(1)	RC20M13K(1)	1.15	1.80
		22-20	RM20M12K(1)	RC20M12K(1)	1.15	2.20
		20-16	RM16M23K(1)	RC16M23K(1)	1.80	3.20
		16-14	RM14M30K(1)	RC14M30K(1)	2.30	3.20
	Stamped & Formed reeled contacts See note (2) for loose piece	26-24	SM24M1TK6(1)(2)	SC24M1TK6(1)(2)	-	0.90-1.60
		22-20	SM20M1TK6(1)(2)	SC20M1TK6(1)(2)	-	1.20-2.10
		18-16	SM16M1TK6(1)(2)	SC16M1TK6(1)(2)	-	3.20
		18-16	SM16M11TK6(1)(2)	SC16M11TK6(1)(2)	-	3.00
		14	SM14M1TK6(1)(2)	SC14M1TK6(1)(2)	-	3.20
PCB	Machined (3)	-	RM20M12E83K(1)	RC20M12E84K(1)	-	-
Coaxial	Cable Multipiece	see pages 167, 200 to 206	RMDXK10D28	RCDXK1D28	-	-
	Cable Monocrimp		RMDX60xxD28	RCDX60xxD28	-	-
	Twisted pair Multipiece		RMDXK10D28 + york090	RCDXK1D28 + york090	-	-
	Twisted pair Monocrimp		RMDX60xxD28	RCDX60xxD28	-	-
Fiber optic	POF contacts (Plastic Optical Fiber)	-	RMPOF1000	RCPOF1000B	-	-

(1): Example of plating, for other plating see page 164 (2): Loose piece contact available if putting L. Example: SM20ML1TK6 (3): For dimensions see page 168 Note: all dimensions are in mm

Electrical Characteristics

UL
10A 500V UL94 V-0

CSA
7A 500V UL94 V-0

IEC
9A 63V 1.5kV 3

UTS 1823 Derating Curves

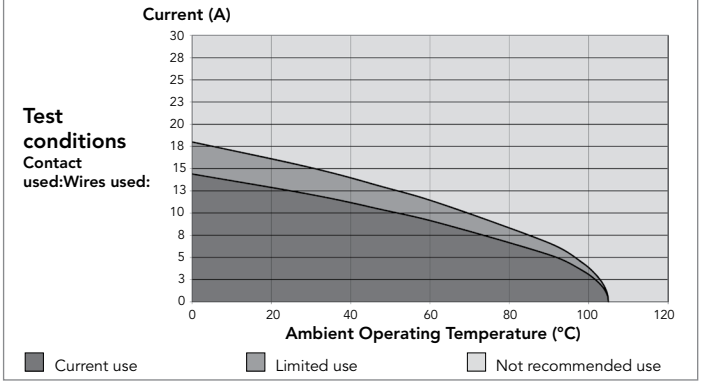

1832 - 18E32 (Shell size 18, 32x#20)

Layout

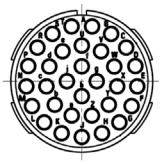

Connector Part Numbers

Contact type	Connector type	Backshell	Part number	
			Male insert	Female insert
Crimp Contact supplied separately see page 151	Free hanging receptacle	Cable gland (Fig. 2)	**UTS1JC1832P**	**UTS1JC1832S**
	Plug	Without (Fig. 3)	**UTS61832P**	**UTS61832S**
	Plug	Cable gland (Fig. 4)	**UTS6JC1832P**	**UTS6JC1832S**
	Jam nut receptacle	Without (Fig. 5)	**UTS71832P**	**UTS71832S**
PCB contacts supplied separately see page 151	Jam nut receptacle	Without (Fig. 5)	**UTS71832P**	**UTS71832S**
Handsolder electrical contacts loaded see page 151	Square flange receptacle	Without (Fig. 1)	**UTS018E32P**	**-**

Possibilities of discrimination/keying methods see page 208

Sealed unmated

Overmoulded Cable Assembly Part Numbers

Overmoulding type	Connector type	Wire size (mm²)	Harmonized cable part number (1)	Part number (length: 1m.)*	
				Male plug	Female plug
Straight ending	Plug	0.5	H05 VV - F 32x0.5	**HAUTS0V1832PST100**	**HAUTS0V1832SST100**
Right angle ending	Plug	0.5	H05 VV - F 32x0.5	**HAUTS0V1832PRA100**	**HAUTS0V1832SRA100**

(1) Other cable available on demand

* Other lengths available on demand

1832 - 18E32 (Shell size 18, 32x#20)

Dimensions

Square Flange Receptacle - UTS0

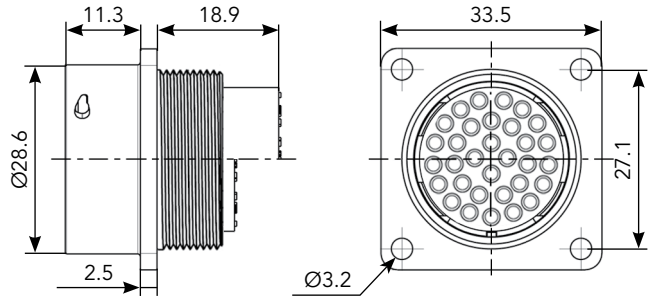

Fig. 1 Front view

Free Hanging - UTS1

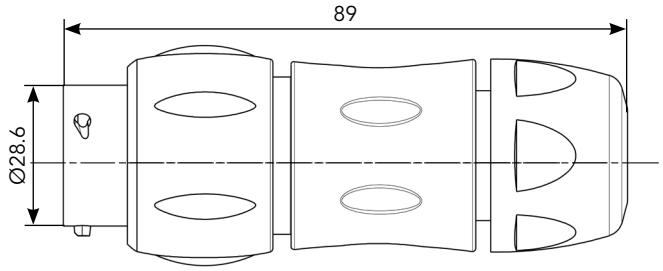

Fig. 2

Plug - UTS6

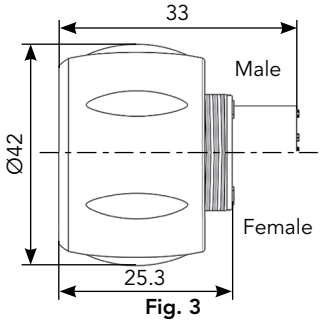

Fig. 3

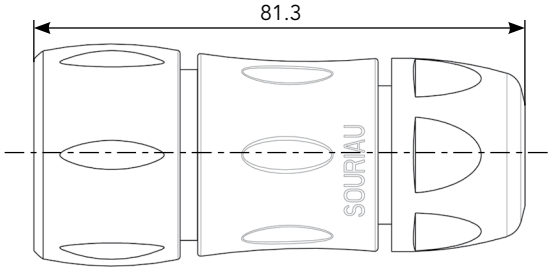

Fig. 4

Jam Nut Receptacle - UTS7

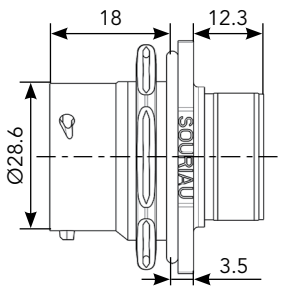

Fig. 5

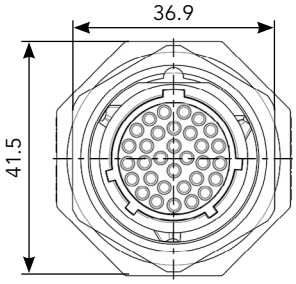

Front view

Mated Connector Length - UTS7

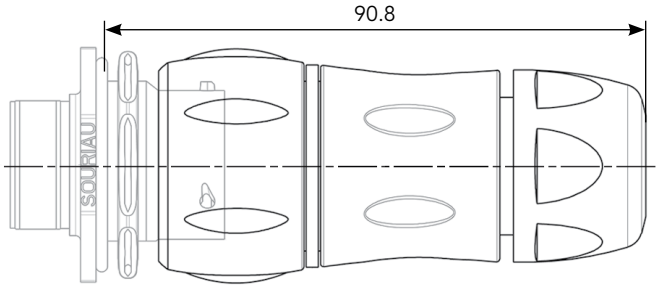

Panel Cut Out

Jam Nut Receptacle - UTS7

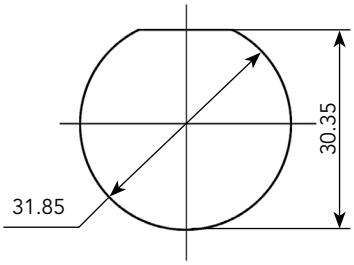

Drilling Pattern

Hole size: 0.9mm

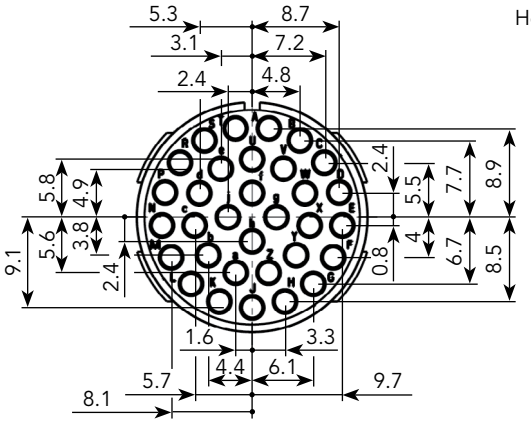

Note: Overmoulded cable assembly dimensions available page 179.

Note: all dimensions are in mm

1832 - 18E32 (Shell size 18, 32x#20)

Accessories and Tooling

Jam Nut Sealing Caps

IP68/69K

Part number
UTS18DCG

IP68/69K Metal terminal

Part number
UTS18DCGR

Handle (without Head)

Part number
SHANDLES

Tool Kit

Part number
TOOLKIT

Plug Sealing Cap

IP68/69K

Part number
UTS618DCG

Square Flange Sealing Cap

IP68/69K Metal terminal

Part number
UTS18DCGE

Crimp Tooling (without Shandles)

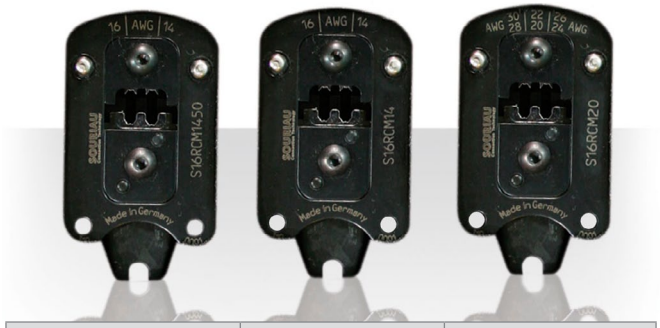

Contacts	Contact size	Part number of head
RM/RC 24W3K(1)	Standard contacts #20 Ø 1mm	S20RCM*
RM/RC 20W3K(1)		S20RCM*
RM/RC 18W3K(1)		S20RCM*
SM/SC 24WL3S		S20SCM20*
SM/SC 20WL3S		S20SCM20*

(1): Example of plating, for other plating see page 164
*: Heads to be used with handle PN: SHANDLES

Handle

+

Head

=

Complete set

Plastic Protective Cap

Part numbers	
Receptacle cap	Plug cap
85005590A	85005599

Gasket

Part numbers
UTFD16B

Color Coding Rings

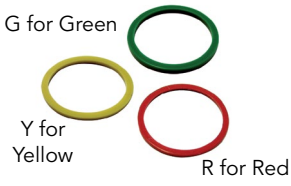

Part numbers	
Receptacles	Plugs
UTS718CCRR	UTS618CCRR
UTS718CCRY	UTS618CCRY
UTS718CCRG	UTS618CCRG

Extraction Tool #20

Part number
RX20D44

1832 - 18E32 (Shell size 18, 32x#20)

Contacts

#20	Contact type	Wire size		Part number		Max wire Ø	Max insulator Ø	Wire stripping length
		AWG	mm²	Male	Female			
Crimp	Machined	26-24	0.13-0.25	RM24W3K(1)	RC24W3K(1)	0.80	1.60	4.80
		22-20	0.32-0.52	RM20W3K(1)	RC20W3K(1)	1.15	1.60	4.80
		20-18	0.50-0.93	RM18W3K(1)	RC18W3K(1)	1.30	2.10	4.80
	Stamped & Formed reeled contacts See note (2) for loose piece	26-24	0.13-0.25	SM24W3TK6(2)	SC24W3TK6(2)	-	0.90-1.60	4.00
		26-24	0.13-0.25	SM24W3S26(2)	SC24W3S25(2)	-	0.90-1.60	4.00
		22-20	0.32-0.52	SM20W3TK6(2)	SC20W3TK6(2)	-	1.20-2.10	4.00
		22-20	0.32-0.52	SM20W3S26(2)	SC20W3S25(2)	-	1.20-2.10	4.00
PCB	Machined (3)	-	-	RMW5016K	RCW5016K	-	-	-
Hand-solder	Loaded in the connector	18-22	-	-	-	-	-	3.80

(1): Example of plating, for other plating see page 164 (2): Loose piece contact available if putting L. Example: SM20WL3TK6 (3): For dimensions see page 168 Note: all dimensions are in mm

Electrical Characteristics

UL
5A 250V UL94 V-0

CSA
4A 250V UL94 V-0

IEC
4A 32V 1.5kV 3

UTS 1832 - 18E32 Derating Curves

Test conditions

Contact used:
Machined contacts
Wires used:
0.518mm²

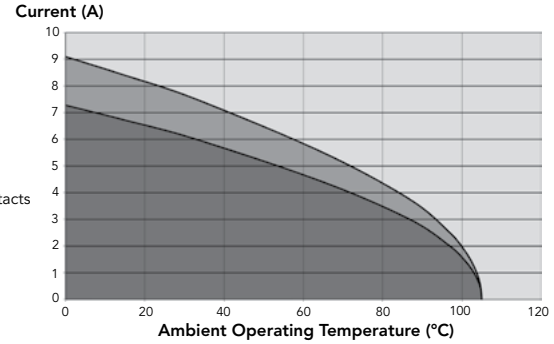

Current use | Limited use | Not recommended use

LC

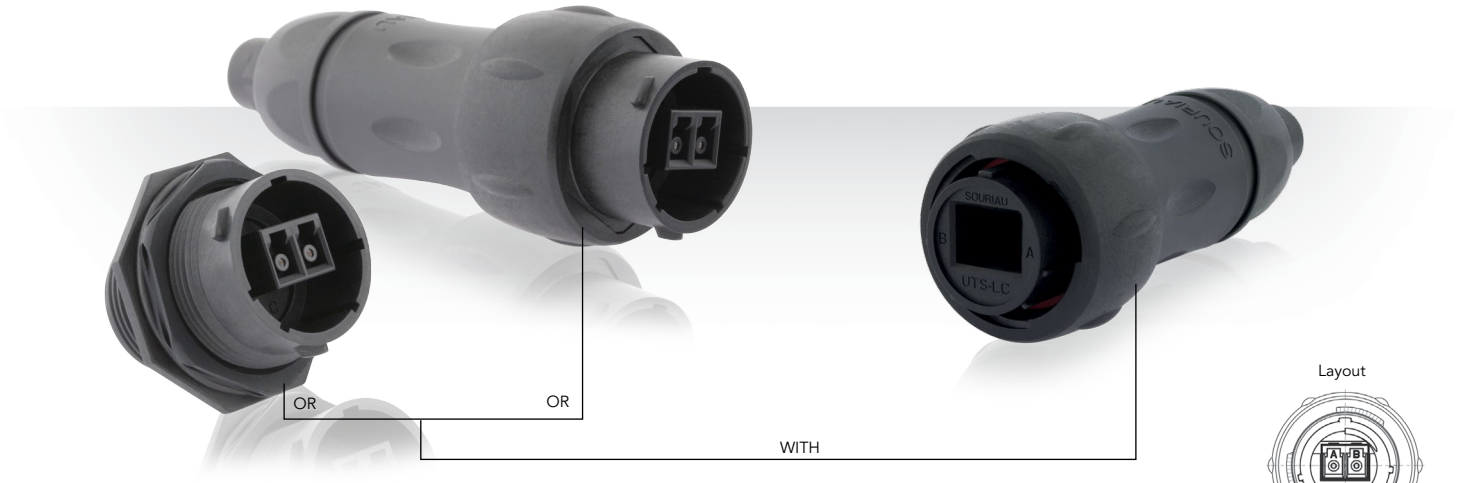

Layout

Connector Part Numbers

Connector type	Backshell	Part number	
		Male insert	Female insert
Free hanging receptacle	Cable gland	**UTS1JC18LCN**	**-**
Plug	Cable gland	**-**	**UTS6JC18LCN**
Jam nut receptacle	Without	**UTS718LCN**	**-**

LC

Dimensions

Free Hanging Receptacle -UTS1JC18LCN

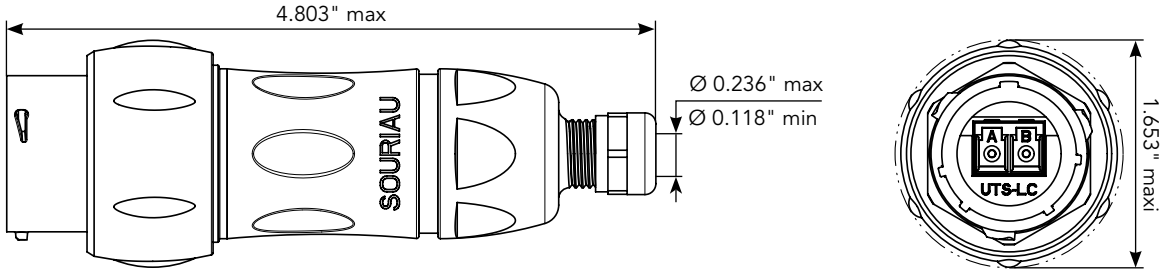

Plug - UTS6JC18LCN

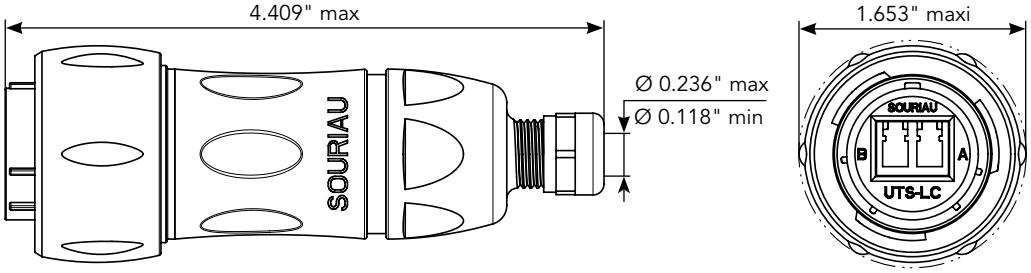

Jam Nut Receptacle - UTS718LCN

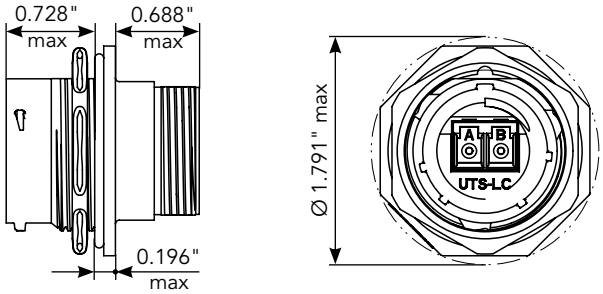

Mated Connector Length - UTS7

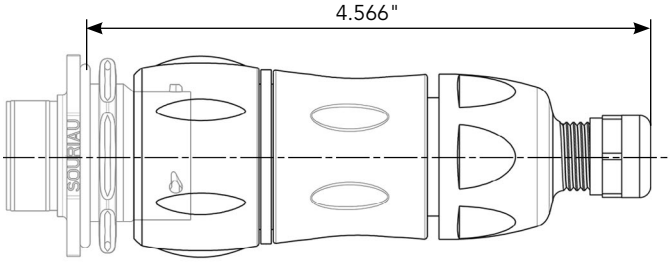

Panel Cut Out

Jam Nut Receptacle - UTS7

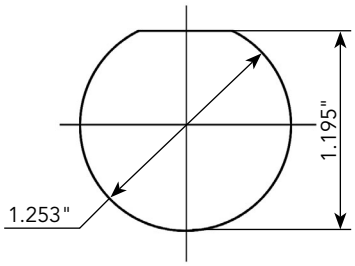

LC

Accessories

Sealing Caps

For UTS6JC18LCN

Part number
UTS618DCG2

For UTS1JC18LCN & UTS718LCN

Part number
UTS18DCG2

MPO

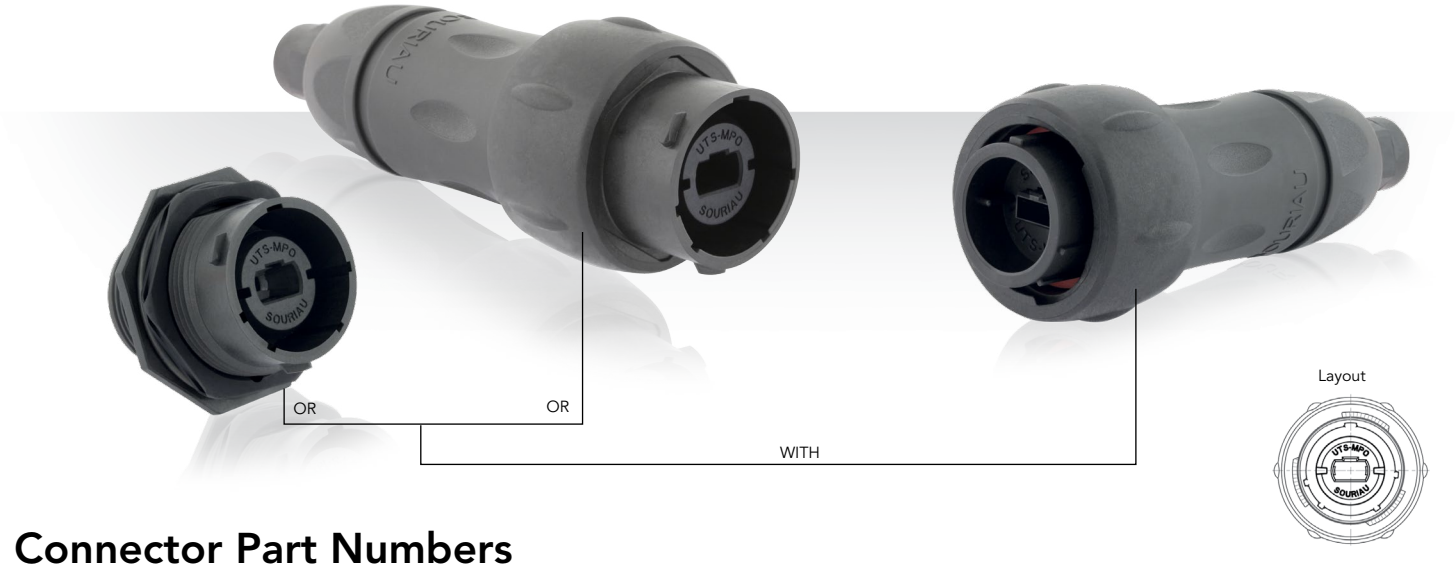

Connector Part Numbers

Connector type	Backshell	Part number	
		Male insert	Female insert
Free hanging receptacle	Cable gland	**UTS1JC18MPN**	**-**
Plug	Cable gland	**-**	**UTS6JC18MPN**
Jam nut receptacle	Without	**UTS718MPN**	**-**

MPO

Dimensions

Free Hanging Receptacle -UTS1JC18MPN

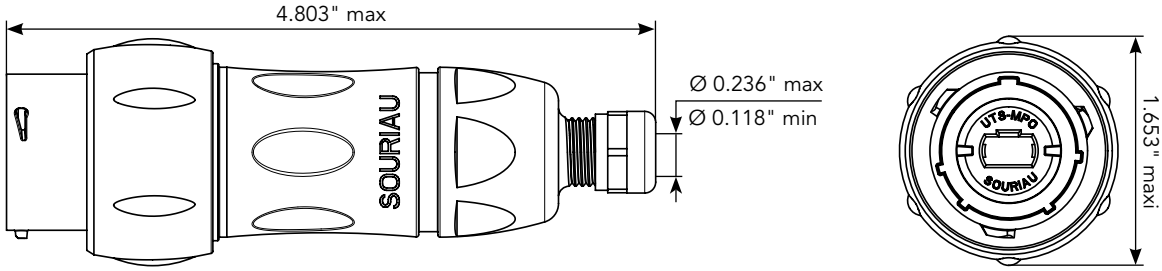

Plug - UTS6JC18MPN

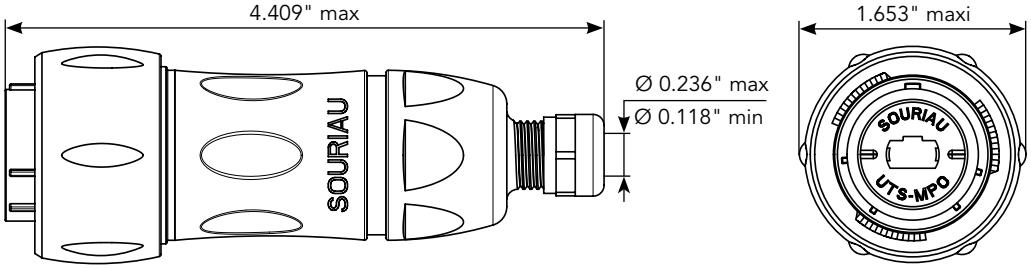

Jam Nut Receptacle - UTS718MPN

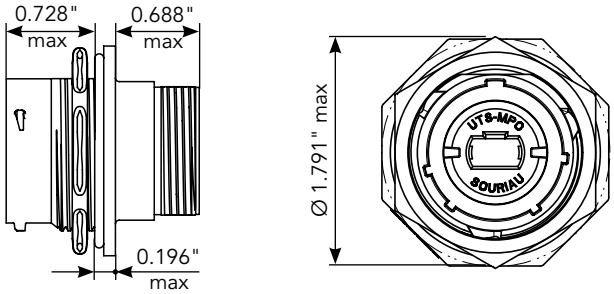

Mated Connector Length - UTS7

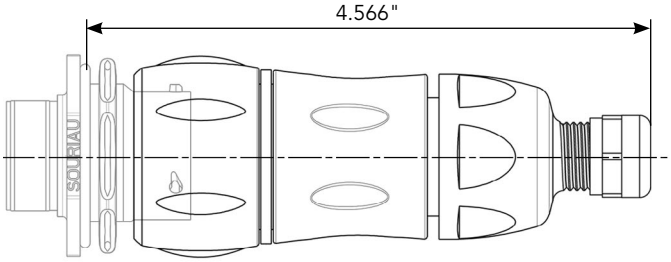

Panel Cut Out

Jam Nut Receptacle - UTS7

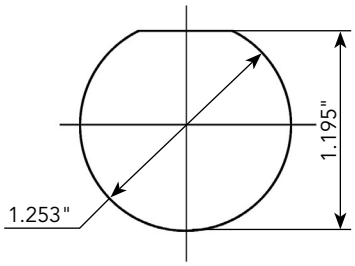

MPO

Accessories

Sealing Caps

For UTS6JC18MPN

Part number
UTS618DCG2

For UTS1JC18MPN & UTS718MPN

Part number
UTS18DCG2

UTS SERIES

© 2014 SOURIAU - SOURIAU is a registratred trademark

UTS Series

Contacts

- Description 162
- Contact Plating Selector Guide 163
- Contact Selector Guide 164
- Packaging 164
- Crimp Contacts 165
- #16 Coaxial Contacts 167
- PCB Contacts 168
- Fiber Optic Contacts 169

Contacts

Description

The UTS series is delivered with (solder and PCB versions) or without contact (crimp version) and offers the unique feature to use the same contact style in any layout with the same active part size (i.e. #20, #16, #12, etc.). This provides our customers with an easy solution to buy only one type of contact to equip all their connectors even if housings/shell sizes are different.

This provides the benefit of standardisation and subsequent reduced inventory costs. In addition, it eliminates the need for added tooling and simplifies the assembly process. SOURIAU contacts are designed for simple snap-in installation and further eliminate the need for insertion tooling.

In addition to the below "crimp" style contact options, the UTS series can also be equipped with PCB contacts.

Crimp contacts are available in different versions:

• Machined

• Stamped & Formed

• Coaxial

• Fiber Optic

Contact Plating Selector Guide

Once the contact size has been selected, the next step is to decide on which type to use. SOURIAU offers two main types of electrical contacts:

- Machined
- Stamped & Formed

Machined contacts are generally chosen as a better solution for power applications or when lower quantities are needed.

Stamped & Formed contacts offer the ability to be crimped automatically which makes them more suitable for high volume production applications.

The next decision to make is: What plating should I choose?

The graph below can help guide you to plating recommendations based on application, mating cycles and current/voltage needs.

Note: do not mixes different platings (i.e. tin plated pin contacts with gold plated socket contacts).

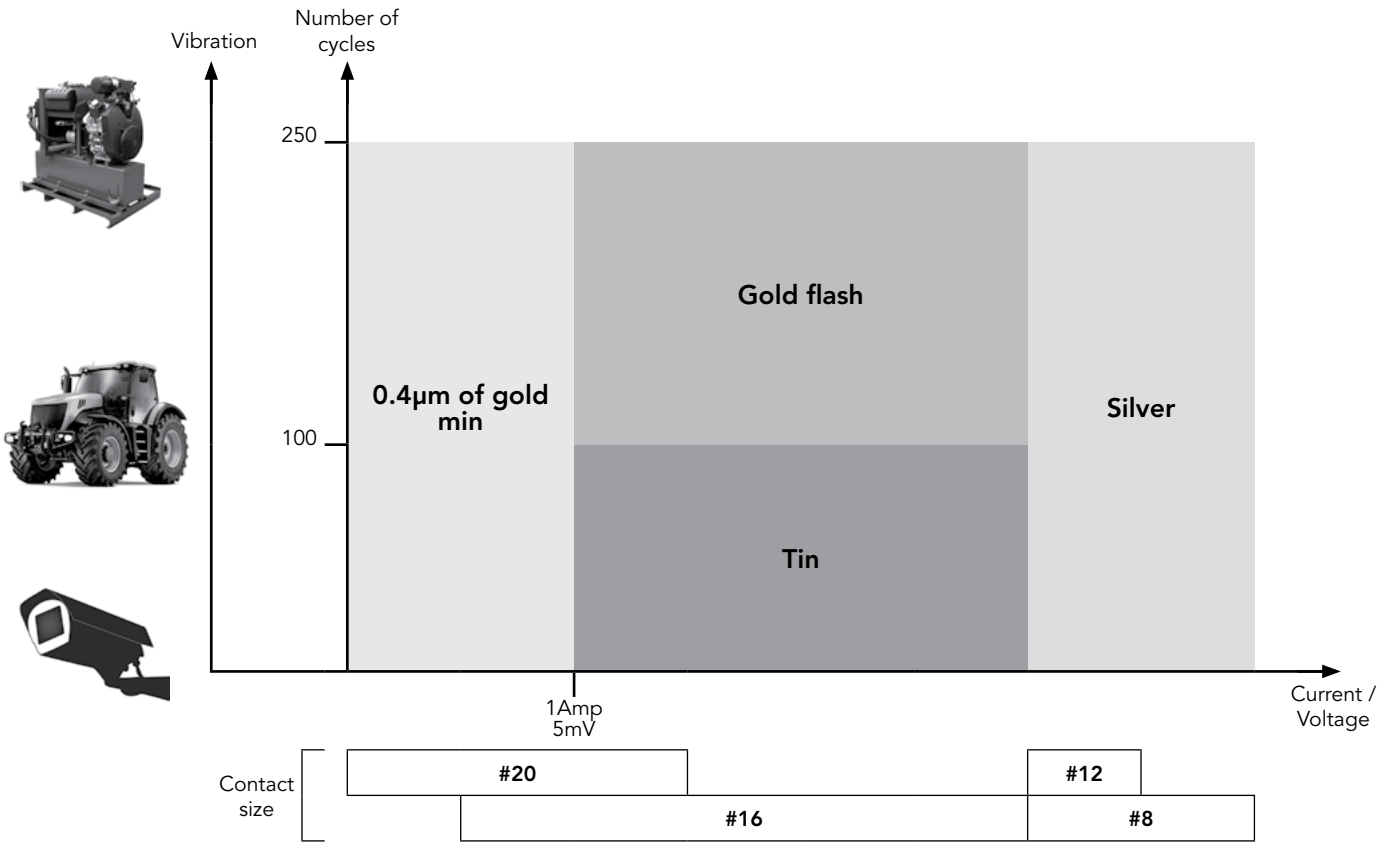

Contact Selector Guide

Contact supplied separately

Electrical characteristics: contact resistance		
#20 Ø1mm	Machined	< 6mΩ
	Stamped & Formed	< 6mΩ
#16 Ø1.6mm	Machined	< 3mΩ
	Stamped & Formed	< 6mΩ
#12 Ø2.4mm	Machined	< 5mΩ
#8 Ø3.6mm	Machined	< 5mΩ

Available platings (contact supplied separately)	
A	2µ Ni + 2µ Ag
J	Gold flash over 2µ Ni
K	Min 0.4µ gold over 2µ Ni
S31	Active part: Gold flash over Ni Crimp area: Nickel
S18	Active part: 0.75µ gold min over 2µ Ni Crimp area: 1.3µ tin over Ni Other: Nickel
S25 **S26**	Active part: 0.75µ Au over Ni Crimp area: flash Au over Ni
TK6	2-5µ Sn pre-plated
D70	Superseded by S31
S6	Superseded by S18
Other platings on request (contact supplied separately)	
T	T: 2µm Ni mini all over + 3 to 5 µm Sn all over
D28	0.75µ gold over Ni
NPC	2 µm Ni

Contact preloaded

Electrical characteristics: contact resistance		
#20 Ø1mm	Machined	< 4mΩ
#16 Ø1.6mm	Machined	< 3mΩ

Available plating (contact preloaded)
Min 0.4µ gold over 0.8µ Ni

Packaging

Due to the wide variety of applications, contact packaging is offered for small series (bulk package) and high volume production (reeled contacts):

Size contacts #20 (Ø1mm) & #16 (Ø1.6mm)

• 25 pieces loose package (Stamped & Formed contacts)

• 50 pieces bulk package (Machined contacts)

• 1,000 pieces bulk package (Machined contacts)

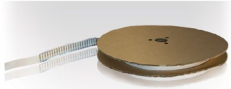

• 3,000 pieces reeled (Stamped & Formed contacts)

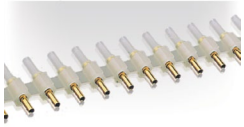

• 2,000 pieces reeled (Machined contacts)

Size contacts #12 (Ø2.4mm) & #8 (Ø3.6mm)

• 100 pieces bulk package (Machined contacts)

Note: 1,000 pieces bulk package available by adding 1000 at the end of the part number: e.g. RC16M23K1000
2,000 pieces reeled package available by adding K at the beginning of the part number: e.g. KRC16M23K

Crimp Contacts

Standard Version

Contact size	Type	Wire size		Part number		Max wire Ø	Max insulator Ø	Available plating see page 156
		AWG	mm²	Male	Female			
#20 Ø1 mm	Machined	26-24	0.13-0.20	RM24W3K	RC24W3K	-	1.58 max	K
	Stamped & Formed	26-24	0.13-0.25	SM24W3-(1)	SC24W3-(1)	-	0.89-1.58	TK6 S25 (female) S26 (male)
				SM24WL3-(2)	SC24WL3-(2)	-		
	Machined	22-20	0.32-0.52	RM20W3K	RC20W3K	-	1.58 max	K
	Stamped & Formed	22-20	0.35-0.5	SM20W3-(1)	SC20W3-(1)	-	1.17-2.08	TK6 S25 (female) S26 (male)
				SM20WL3-(2)	SC20WL3-(2)	-		
	Machined	20-18	0.50-0.93	RM18W3K	RC18W3K		2.10 max	K
#16 Ø1.6 mm	Machined	30-28	0.05-0.08	RM28M1-	RC28M1-	0.55	1.1	K, J
	Machined	26-24	0.13-0.2	RM24M9-	RC24M9-	0.8	1.6	K, J
	Stamped & Formed	26-24	0.13-0.25	SM24M1-(1) SM24ML1-(2)	SC24M1-(1) SC24ML1-(2)	0.89-1.28	Insulation grip	S31, S18, TK6
	Machined	22-20	0.32-0.52	RM20M13-	RC20M13-	1.18	1.8	K, J
				RM20M12-	RC20M12-		2.2	
	Stamped & Formed	22-20	0.35-0.5	SM20M1-(1) SM20ML1-(2)	SC20M1-(1) SC20ML1-(2)	1.17-2.08	Insulation grip	S31, S18, TK6
	Machined	20-16	0.52-1.5	RM16M23-	RC16M23-	1.8	3.2	K, J
	Stamped & Formed	18-16	0.8-1.5	SM16M1-(1) SM16ML1-(2)	SC16M1-(1) SC16ML1-(2)	3.0	No insulation grip	S31, S18, TK6
	Stamped & Formed	18-16	0.8-1.5	SM16M11-(1) SM16ML11-(2)	SC16M11-(1) SC16ML11-(2)	2.0-3.0	Insulation grip	S31, S18, TK6
	Machined	16-14	1.5-2.5	RM14M30-	RC14M30-	2.28	3.2	K, J
	Stamped & Formed	14	2.0-2.5	SM14M1-(1) SM14ML1-(2)	SC14M1-(1) SC14ML1-(2)	3.2	No insulation grip	S31, S18, TK6
#12 Ø2.4 mm	Machined	22	0.13-0.4	82911457N-	82911456-	-	4.9	A, K
		20	0.5	82911459N-	82911458-			
		18	0.75-1.0	82911461N-	82911460-			
		16	1.5	82911463N-	82911462-			
		14	2.5	82911465N-	82911464-			
		12	4	82911467N-	82911466-			
#8 Ø3.6 mm	Machined	16	1.5	82913601A	82913600A	-	6.5	A
		14	2.5	82913603A	82913602A			
		12	4	82913605A	82913604A			
		10	6.0	82913607A	82913606A			
		8	10.0	82913609A	82913608A			

(1) contact reeled (2) loose contact
Exemple: **RM24W3K** - Size #20, Machined, AWG24 wire.

Note: all dimensions are in mm

Crimp Contacts (Continued)

First Mate Last Break Contacts

Contact size	Type	Wire size		Part number		Max wire Ø (mm)	Max insulator Ø (mm)	Color band		Available plating see p. 156
		AWG	mm²	Male	Female			Front	Rear	
#16 Ø1.6 mm Longer male contact (+1mm)	Machined	30-28	0.05-0.08	RM28M1GE1K	-	0.55	1.1	-	Red	K
		26-24	0.13-0.2	RM24M9GE1K		0.8	1.6	Red	Red	
		22-20	0.32-0.52	RM20M13GE1K		1.18	1.8	Black	Red	
				RM20M12GE1K			2.2	Blue	Red	
		20-16	0.52-1.5	RM16M23GE1K		1.8	3.2	-	Red	
		16-14	1.5-2.5	RM14M30GE1K		2.28	-	-	Red	
#16 Ø1.6 mm Shorter female contact (-0.7mm)	Machined	30-28	0.05-0.08	-	RC28M1GE7K	0.55	1.1	-	Blue	K
		26-24	0.13-0.2		RC24M9GE7K	0.8	1.6	Red	Blue	
		22-20	0.32-0.52		RC20M13GE7K	1.18	1.8	Black	Blue	
					RC20M12GE7K		2.2	Blue	Blue	
		20-16	0.52-1.5		RC16M23GE7K	1.8	3.2	-	Blue	
		16-14	1.5-2.5		RC14M30GE7K	2.28	-	-	Blue	

How to make FMLB / LMFB connection

Contact 1 / Contact 2	Standard male contact	Standard female contact	Longer male contact
Standard male contact		✓	
Standard female contact	✓		✓ FMLB
Shorter female contact	✓ LMFB		

First Mate Last Break contacts should be chosen only if the cavity is not marked with the ground symbol. For cavities marked with the ground symbol, standard contacts will fulfill the same role as a first mate, last break contact used in a standard cavity.

Ground symbol

#16 Coaxial Contacts

Coaxial Contact Range

SOURIAU provides 2 types of coaxial contacts suitable for 50 or 75Ω, coaxial cable or twisted pair cable.

Monocrimp coaxial contact

• The monocrimp one-piece coaxial contacts offer high reliability plus the economic advantage of a 95% reduction in installation time over conventional assembly methods.

• This economy is achieved by simultaneously crimping both the inner conductor and outer braid or drain wire.

Multipiece crimp coaxial contact

• The inner conductor and outer braid is crimped individually.

• The thermoplastic insulating bushing in the outer body is designed to accept and permanently retain the inner contact.

• An outer ferrule is used to connect the braid to the outer contact and provide cable support to ensure against bending and vibration.

Suitable for coaxial cable or twisted cable

• For jacket diameter from 1.78 to 3.05mm
Inner conductor up to 2.44mm diameter

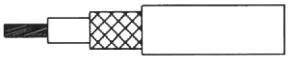

• For jacket diameter from 0.64 to 1.45mm
Inner conductor from AWG30 to AWG24

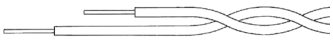

Contacts for coaxial cable summary

Contact type	Contact range		Contact part number with cable combination	Cabling notice
	Male contact	Female contact		
Multipiece	RMDXK10D28	RCDXK1D28	See page 200	See pages 204 & 205
Monocrimp	RMDX60xxD28	RCDX60xxD28		See page 206

Contacts for twisted pairs cable summary

Contact type	Contact range		Contact part number with cable combination	Cabling notice
	Male contact	Female contact		
Multipiece	RMDXK10D28 + YORK090	RCDXK1D28 + YORK090	See page 201	See page 202
Monocrimp	RMDX60xxD28	RCDX60xxD28		See page 203

PCB Contacts

PCB Contacts Supplied Separately - UTS Standard Series

PCB soldering

The UTS Series can be used in a wave soldering process, but not reflow soldering process.
All high temperature processes are prohibited.

Contact size	Part number		Plating see page 164
	Male	Female	
#20 Ø1mm	RMW50A7K RMW5016K	RCW50A7K RCW5016K	K
#16 Ø1.6mm	RM20M12E8K RM20M12E83K RM20M12E84K	RC20M12E8K RC20M12E83K RC20M12E84K RC20M12E85K RC20M12E86K RC20M12E87K	K
#8 Ø3.6mm	82911685NPC	82911684NPC	2 µm Ni

Minimal length G (mm)

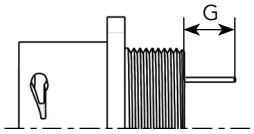

Dimension of dipsolder contacts out of connector
(contacts to be ordered separately).

UTS0 with PCB contacts #16

Connector size	Pin contact			Socket contact			
	RM20M 12E8K*	RM20M 12E83K*	RM20M 12E84K*	RC20M 12E8K*	RC20M 12E83K*	RC20M 12E84K*	RC20M 12E87K*
10	4.2	9.4	12.9	4.2	9.4	12.9	6.5
12	3.6	8.8	12.3	4.2	9.4	12.9	6.5
14	3.3	8.5	12.0	2.6	7.8	11.3	4.9
18	4.2	9.3	12.9	4.2	9.4	12.9	6.5

UTS7 with PCB contacts #20 and #16

Connector size	Pin contact				Socket contact		
	RM20M 12E83K*	RM20M 12E84K*	RMW 50A7K*	RMW 5016K*	RC20M 12E84K*	RCW 50A7K*	RCW 5016K*
10	7.3	10.8	8.4	9.3	3.6	8.4	9.3
12	7.3	10.8	8.4	9.3	3.9	8.4	9.3
14	7.3	10.8	8.4	9.3	3.6	-	-
18	8.1	11.6	8.4	9.3	3.6	-	-

* Plating indication see page 164

UTS7 with PCB contacts #16 and #8

Connector type	Pin contact		Socket contact	
	RM20M12E83K*	82911685NPC*	RC20M12E87K*	82911684NPC*
UTS7142G1P	-	6.4	-	-
UTS7142G1S	-	-	-	8.2
UTS7142G1SNPT	-	5.8	-	5.4
UTS718X2M3	4.9	4.5	3.6	5.2
UTS7183G1SNPT	-	-	-	4.17

* Plating indication see page 164

Note: all dimensions are in mm

PCB Contacts Loaded - UTS Sealed Unmated Series

PCB soldering

The UTS Series can be used in a wave soldering process, but not reflow soldering process.
All high temperature processes are prohibited.

Nominal length G (mm)

Dimension of dipsolder contacts out of connector
(contacts to be ordered separately).

UTS0

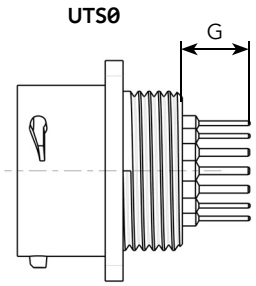

UTS7

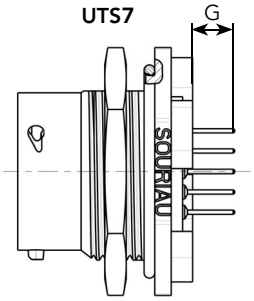

UTS0

Connector size	Connector Part Number	Pin contact		Socket contact	
		G mini	G maxi	G mini	G maxi
8	8D2 - 8D3 8D4	7.2	9.2	7	9
	8D3A/8D98 8D33	8.1	10.4	8.1	10.1
10	10D6 - 10D98 10D7	8.1	10.2	8.1	10.3
12	12D2 - 12D3 12D8 - 12D10	8.1	10.2	8.1	10.3
	12D4	8.2	10	8.1	10.3
	12D14	7.2	9	7.1	9.2
14	14D5 - 14D12 - 14D15 14D18 - 14D19	8.1	10.2	8.1	10.3
	14D7	8.2	10	8.1	10.3

UTS7

Connector size	Connector Part Number	Pin contact		Socket contact	
		G mini	G maxi	G mini	G maxi
8	8D2 - 8D3 8D4	3.8	6.1	3.7	5.9
	8D3A/8D98 8D33	4.7	7.3	4.7	7
10	10D6 - 10D98 10D7	4.7	7.3	4.7	7
12	12D2 - 12D3 12D8 - 12D10	4.7	7.3	4.8	7
	12D4	4.9	7.1	4.8	7
	12D14	3.9	6.2	3.8	6
14	14D5 - 14D12 - 14D15 14D18 - 14D19	4.8	7.3	4.9	7
	14D7	4.9	7.1	4.9	7

Note: all dimensions are in mm

Fiber Optic Contacts

Description

Size 16 fiber optic contacts for UTS and other TRIM TRIO® connectors

Size 16 fiber optic contacts are designed for the integration of optical links in UTS and other TRIM TRIO® cable connectors.

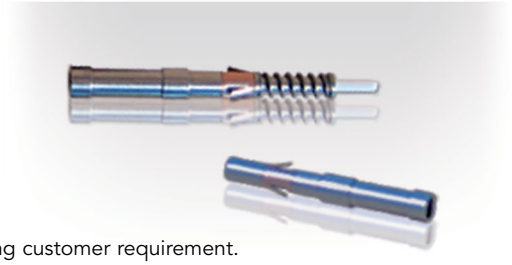

The Fiber optic contacts are designed to accommodate:

- Plastic Optical Fiber (POF) 1 mm core and 2.2 mm jacket

Typical features and benefits are:

- Socket contact is spring loaded to avoid any air gap between the two optical faces.
- Low insertion loss is provided by high precision pieces.
- Single jumpers, multiway harness and active device housings can be supplied regarding customer requirement.

Technical Characteristics

Performance

- Fiber type: ..... POF
- Wave length: ..... 650 nm
- Optical insertion loss (typ.): ..... 2 dB max.
- Jacketed external diameter: 2.2mm
- Temperature range: ..... -25°C to +70°C
- Cable retention: 49N
- Mating cycles without cleaning: 50
- Max. mating cycles: 500

Construction

- Contact body: Copper alloy

Connector accommodation

Any TRIM TRIO® size 16 contact can be used in any contact position in any connector in the TRIM TRIO® size 16 interconnection system: UTP, UTS, UTG, UTO, UTL.

Ordering Information

POF Contacts (Plastic Optical Fiber)

Male contact RMPOF1000

Female contact RCPOF1000B

POF Contact (Plastic Optical Fiber)

STANDARD TOOLING KIT - P/N 80MS0004
The *standard tooling kit* is made of the part numbers below that can be ordered separately as well.

Part numbers	Descriptions
80WD0005	Stripping tool
80WD0025	Automatic stripping tool for Ø 0.5 mm, 0.6 mm, 0.7 mm & 3.8 mm
80WM0006	Ruler
80WP0005	Polishing plate
80WP0013	Non slip base (to hold the polishing plate)
80WP0014	Polishing disk (grain size 9µm)
80WP0018	Polishing tool
80WP0019	Polishing disk (grain size 30µm)
80WS0002	Crimping plier

SPECIFIC TOOLING LIST - Can only be ordered separately

Part numbers	Descriptions
80WG0010	Needle
80WG0015	Capsule
80WG0016	Syringe
80WN0005	Dry air spray
80WN0006	Optical paper
80WN0012	Dropper bottle
80WN0008	Wiping solvent

UTS SERIES

© 2014 SOURIAU - SOURIAU is a registratred trademark

UTS Series

Technical Information

Tooling 174
Crimping Instructions 176
Handle & Interchangeable Heads 178
Extraction Tools 179
Overmoulded Harnesses Dimensions 179
Assembly Instructions 180
Mated Connector Lengths 184
Mating Procedure 185
Rated Current & Working Voltage 186
UV Resistance 187
UL94 + UL1977 188
IEC 61984 & IP Codes Explained 191
IEC 61140 Explained 193
What is NEMA Rating ? 194
Ethernet for the Layman 195

Automatic Crimping Tools

Mecal is a leader in manufacturing tooling for crimping terminals over a stripped wire.
Established in 1976, Mecal has become one of the world's leading companies dedicated to the design and manufacture of semi automatic production tools for strip fed, open barrel crimp terminals, serving the Automotive, Telecom and Datacom industries.

The extreme environment interconnect specialist "from deep sea to deep space".
SOURIAU designs, manufactures and markets high performance interconnect solutions for severe environments dedicated to the aerospace, defense, light and heavy industry markets.

SOURIAU has been working in partnership with Mecal for many years. With sales offices located in all major industrial regions of the world, the combined strengths of both organizations has resulted in a truly global solution to all your production tooling needs.

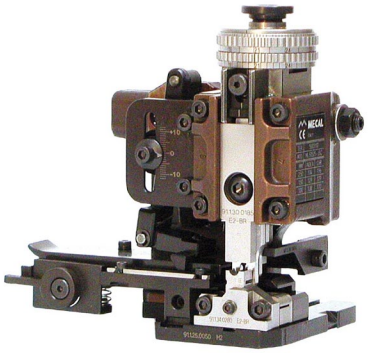

Mini Applicator

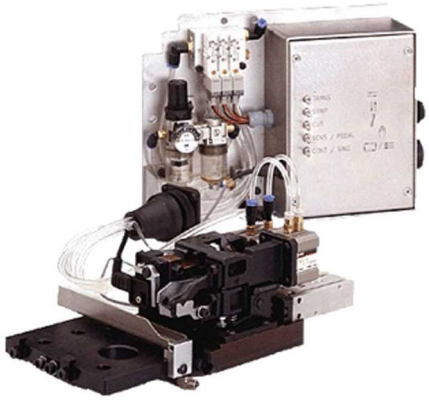

Stripper

Presses

Mecal sales network:

http://www.mecal.net/index.php/en/europe

Tooling

Crimp Tool Table

Standard contacts

Contact size	Part number	Head*	Handles*	Extraction tools
#20 Ø 1mm	RM/RC 24W3K	S20RCM	SHANDLES	RX20D44
	RM/RC 20W3K			
	RM/RC 18W3K			
	SM 24WL3S*(1) SC 24WL3S*(1)	S20SCM20		
	SM/SC 20WL3S*(1)			
#16 Ø 1.6mm	RM/RC 28M1*	S16RCM20		RX2025GE1
	RM/RC 24M9*			
	RM/RC 20M13*			
	RM/RC 20M12*			
	RM/RC 16M23*	S16RCM16		
	RM/RC 14M30*	S16RCM14		
	SM/SC 24ML1*(1)	S16SCM20		
	SM/SC 20ML1*(1)			
	SM/SC 16ML1*(1)	S16SCML1		
	SM/SC 14ML1*(1)			
	SM/SC 16ML11*(1)	S16SCML11		

(1) loose contact * endurance of SHANDLES & Head tools = 50,000 cycles

Contact size	Part number	Tool with separate locator			Extraction tools
		Hand tool	Positioner + locator setting		
#12 Ø 2.4mm	82911457N* / 82911456*	M317	VGE10077A	1-2	51060210924
	82911459N* / 82911458*			2	
	82911461N* / 82911460*			2	
	82911463N* / 82911462*			3	
	82911465N* / 82911464*			3	
	82911467N* / 82911466*			4	
#8 Ø 3.6mm	82913601A / 82913600A	M317	VGE10078A	3	51060210936
	82913603A / 82913602A			3	
	82913605A / 82913604A			4	
	82913607A / 82913606A			5	
	82913609A / 82913608A			6/7	

* see page 157 for plating options and other contact details

Specific contacts (First mate Last break contacts)

Contact size	Part number*	Hand tools (SHANDLES) head	Tool with separate locator			Extraction tools
			Hand tool	Positioner + locator setting		
#16 Ø 1.6mm Longer RM contact	RM28M1GE1K	S16RCM20	-	-	-	RX2025GE1
	RM24M9GE1K					
	RM20M13GE1K					
	RM16M23GE1K RM20M12GE1K	S16RCM16	MH860	MH86186	6/8	
	RM14M30GE1K	S16RCM14	-	-	-	
#16 Ø 1.6mm Shorter RC contact	RC28M1GE7K	S16RCM20	MH860	MH86164G	4/6	
	RC24M9GE7K				5/6	
	RC20M13GE7K RC20M12GE7K				5/7	
	RC16M23GE7K	S16RCM16			6/8	
	RC14M30GE7K	S16RCM14	M317	UH25	3	

* see page 166 for plating options and other contact details

Coaxial contacts

See coax contacts details on page 167 and cabling notice pages 202 to 206.

Crimping instructions

Wire Stripping Crimp Version

	Part number		Stripping length L
	Male	Female	
Machined contact	**#20 (Ø 1mm)**		
	RM24W3- / RM20W3- RM18W3-	RC24W3- / RC20W3- RC18W3-	4.8
	#16 (Ø 1.6mm)		
	RM28M1- / RM24M9- RM20M13- / RM20M12-	RC28M1- / RC24M9- RC20M13- / RC20M12-	4.8
	RM16M23- /RM14M30-	RC16M23- /RC14M30-	7.1
	#8 (Ø 3.6mm)		
	82913601- / 82913603- 82913605- / 82913607- 82913609-	82913600- / 82913602- 82913604- / 82913606- 82913608-	6.5 to 7.5
Stamped & Formed	**#16 (Ø 1.6mm)**		
With insulation support	SM24M1- / SM24ML1- SM20M1- / SM20ML1-	SC24M1- / SC24ML1- SC20M1- / SC20ML1-	4
	SM16M11- / SM16ML11-	SC16M11- / SC16ML11-	4.65
	#20 (Ø 1mm)		
	SM24W3- / SM24WL3- SM20W3- / SM20WL3-	SC24W3- / SC24WL3- SC20W3- / SC20WL3-	4
Without insulation support	**#16 (Ø 1.6mm)**		
	SM16M1- / SM16ML1-	SC16M1- / SC16ML1-	6.35
	SM14M1- / SM14ML1-	SC14M1- / SC14ML1-	6.35
Power contacts	**#12 (Ø 2.4mm)**		
	82911457- / 82911459- 82911461- / 82911463- 82911465- / 82911467-	82911456- / 82911458- 82911460- / 82911462- 82911464- / 82911466-	7 to 8
	#8 (Ø 3.6mm)		
	82913601- / 82913603- 82913605- / 82913607- 82913609-	82913600- / 82913602- 82913604- / 82913606- 82913608-	6.5 to 7.5

Note: See page 165 for plating options and other contact details

Wire Stripping Solder and Screw Versions

		Stripping length L
Solder contact delivered with connector	**#16 (Ø 1.6mm) & #20 (Ø 1mm)**	
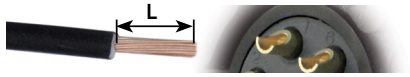		5
Screw contact delivered with connector	**#16 (Ø 1.6mm)**	
		5.8

Note: all dimensions are in mm

Crimping

One of the key factors which affects the performance of a connector is the way contacts are terminated. Crimped connections are nowadays seen as the best solution to ensure quality throughout the lifetime of the product. Here are some reasons why we recommend this method of termination for UTS connectors:

Advantages (Extract from the IEC 60352-2):
- Efficient processing of connections at each production level
- Processing by fully-automatic or semi- automatic crimping machines, or with hand operated tools
- No cold-soldered joints
- No degradation of the spring characteristic of female contacts by the soldering temperature
- No health risk from heavy metal and flux steam
- Preservation of conductor flexibility behind the crimped connection
- No burnt, discolored and overheated wire insulation
- Good connections with reproducible electrical and mechanical performances
- Easy production control.

To ensure that the crimp tooling is performing according to original specifications, it is important to carry out regular checks. A common way to check the performance of tooling is with a simple pull test, ideally using a dedicated electric pull tester. Minimum recommended pull forces are indicated in the tables below:

Machined contact

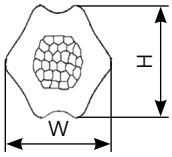

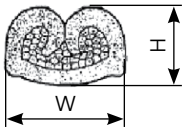

Stamped & Formed contact

Active contact part	Contact type	Die location on heads	Wire section range	Section (mm²)	Tensile straight test (mini)	Height (mm) H (±0.075)	Width (mm) W (±0.075)	Tooling head p/n
Machined contacts size #20 Ø 1 mm	RM24W3K RC24W3K	26/24	AWG 26	0.12 min	15 N	0.95	1.27	S20RCM
			AWG 24	0.25 max	32 N			
	RM20W3K RC20W3K	22/20	AWG 22	0.32 min	40 N	1.26	1.78	
			AWG 20	0.50 max	60 N			
	RM18W3K RC18W3K	20/18	AWG 20	0.50 max	60 N	1.35	1.86	
			AWG 18	0.82 max	90 N			
S & F contacts size #20 Ø 1 mm	SM24WL3TK6* SC24WL3TK6*	26/24	AWG 26	0.12 min	15 N	0.80	1.49	S20SCM20
			AWG 24	0.25 max	32 N			
	SM20WL3TK6* SC20WL3TK6*	22/20	AWG 22	0.32 min	40 N	1.01	1.53	
			AWG 20	0.50 max	60 N			
Machined contacts size #16 Ø 1.6 mm	RM28M1K* RC28M1K*	30/28	AWG 30	0.05 min	11 N	1.14	1.41	S16RCM20
			AWG 28	0.08 max	11 N			
	RM24M9K* RC24M9K*	26/24	AWG 26	0.12 min	15 N	1.15	1.41	
			AWG 24	0.25 max	32 N			
	RM20M13K* RC20M13K*	22/20	AWG 22	0.32 min	40 N	1.26	1.76	
			AWG 20	0.50 max	60 N			
	RM20M12K* RC20M12K*		AWG 22	0.32 min	40 N			
			AWG 20	0.50 max	60 N			
	RM16M23K* RC16M23K*	20	AWG 20	0.50 max	60 N	1.66	2.18	S16RCM16
		18	AWG 18	0.82 max	90 N	1.80	2.28	
		16	AWG 16	1.50 max	150 N	1.96	2.43	
	RM14M30K* RC14M30K*	16	AWG 16	1.50 min	150 N	2.10	2.68	S16RCM14
		14	AWG 14	2.50 min	230 N	2.30	2.78	
S & F contacts size #16 Ø 1.6 mm	SM24ML1TK6* SC24ML1TK6*	26/24	AWG 26	0.12 min	15 N	0.84	1.50	S16SCM20
			AWG 24	0.25 max	32 N			
	SM20ML1TK6* SC20ML1TK6*	22/20	AWG 22	0.32 min	40 N	1.02	1.54	
			AWG 20	0.50 max	60 N			
	SM16ML11TK6* SC16ML11TK6*	18	AWG 18	0.82 min	90 N	1.32	2.09	S16SCML11
		16	AWG 16	1.50 max	150 N	1.36	2.10	
	SM16ML1TK6* SC16ML1TK6*	18	AWG 18	0.82 min	90 N	1.49	2.02	S16SCML1
		16	AWG 16	1.50 max	150 N	1.7	2.05	
	SM14ML1TK6* SC14ML1TK6*	14	AWG 14	2.50 max	230 N	1.79	2.58	

*: example of plating options, for other plating see page 164

Handle & Interchangeable Heads

User Guide

1) Fully close then release the tool, keep it open.
Open the 2 pins.

2) Choose the adapter head (sold separately), keep vertical and slide it into the handle until the mechanical end.

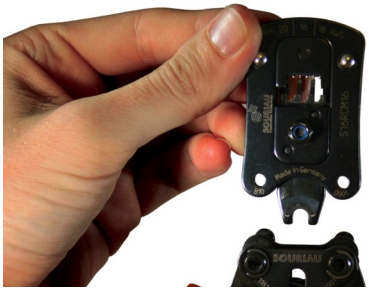

3) Close the two pins simultaneously to maintain the head.

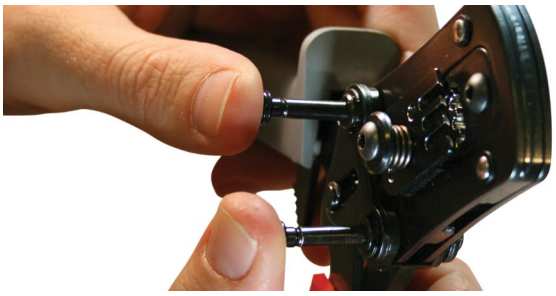

4) Strip the cable properly check the recommended size in the catalog on page 176.

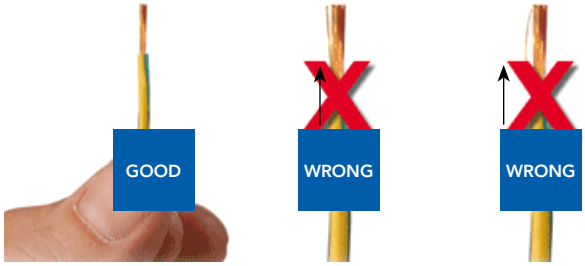

5) Place conductors, with no deteriorations, in the bucket contact.
All strands to be located in the crimp bucket.

6) Position the contact in the bottom of the tool by checking its orientation.

7) To crimp contact assembly-cable, tighten sharply the clip to the end of the mechanism (maxi 175N).

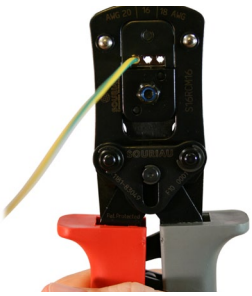

8) To control crimp quality, slighty pull cable with two fingers to control retention.

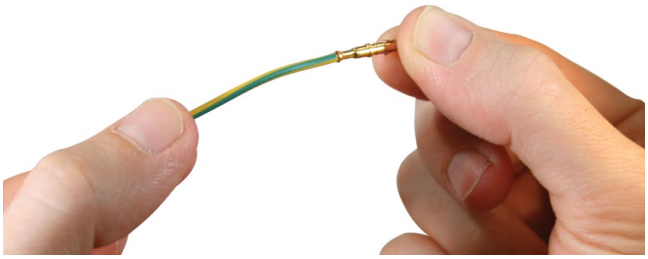

Extraction Tools

Contact size	Extractor
#20 Ø 1 mm	RX20D44
#16 Ø 1.6 mm	RX2025GE1
#12 Ø 2.4mm	51060210924
#8 Ø 3.6mm	51060210936

Contact extraction instruction

Place the tool into the cavity from front face of the connector, push on the handle, then remove the contact.

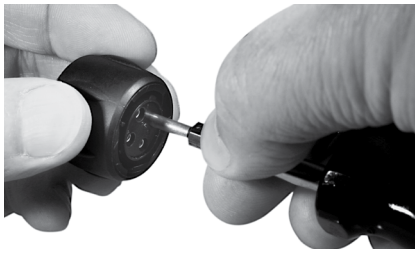

Overmoulded Cable Assembly Dimensions

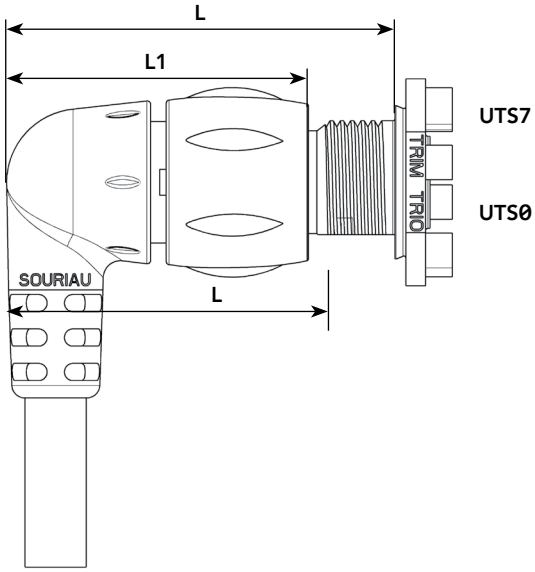

Shell size	UTS0				UTS7			
	L max	L1 max	L2 max	L3 max	L max	L1 max	L2 max	L3 max
8	42.8	36.8	80.7	57.2	46.8	36.8	85.8	57.2
10	55.8	50.3	98.6	92	60.5	50.3	102.7	92
12	57.1	51.4	99.3	93.7	61.4	51.4	106.4	93.7
14	62.5	56.3	100.3	94.6	67.6	56.3	104.8	94.6

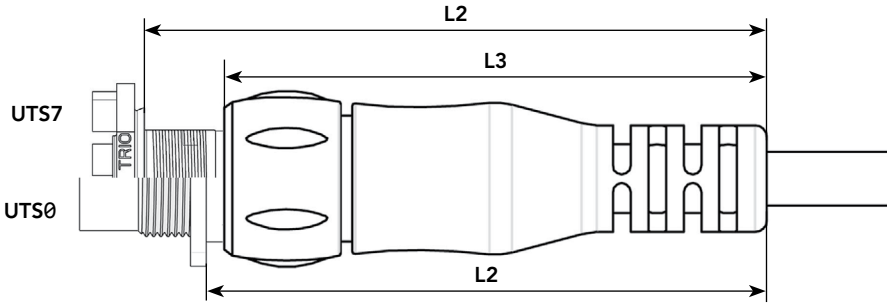

Note: all dimensions are in mm

Assembly Instructions

UTS0 Assembly (Mounting Suggestion)

- Strip wires, crimp or solder contacts (see pages 176 & 177)
- Insert contacts into connector cavities (insert manually or use tool RTM205 crimp contacts)
- Place receptacle in the panel cut-out
- Secure receptacle with screws (not supplied)
  Tighten screws: M2.5 (recommended torque: see table below)
- For complete sealing of the system use optional gasket and sealed screw solution (not sold by SOURIAU).

Front mounting: Crimp version

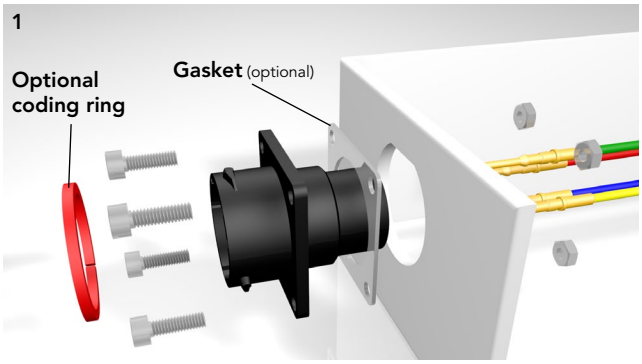

Rear mounting: Crimp version

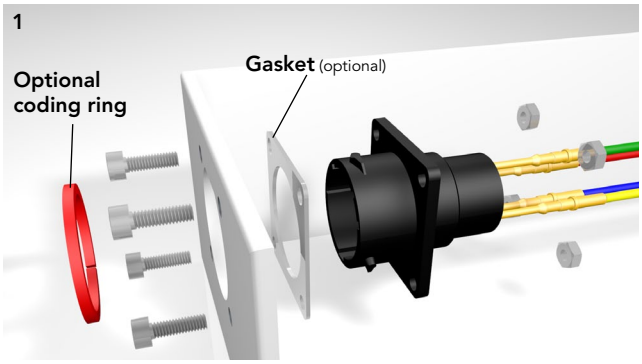

Front mounting: Solder version

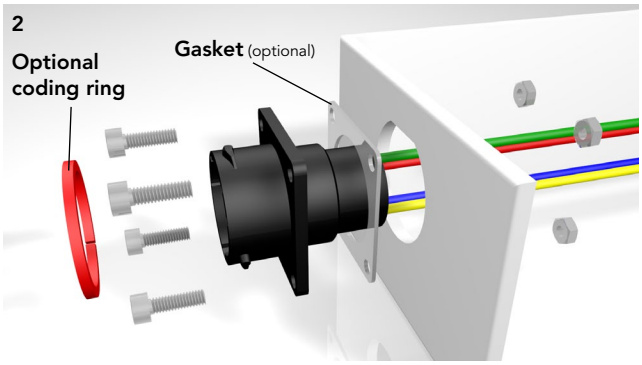

Rear mounting: Solder version

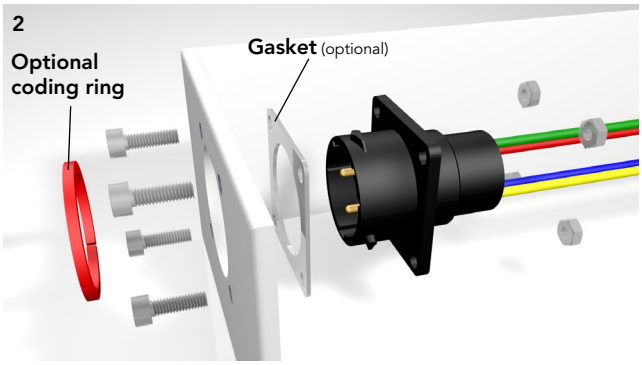

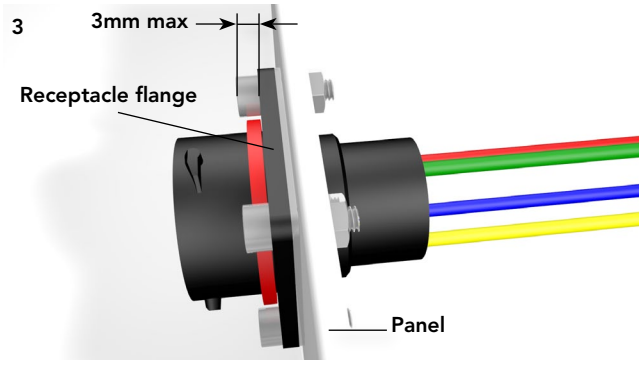

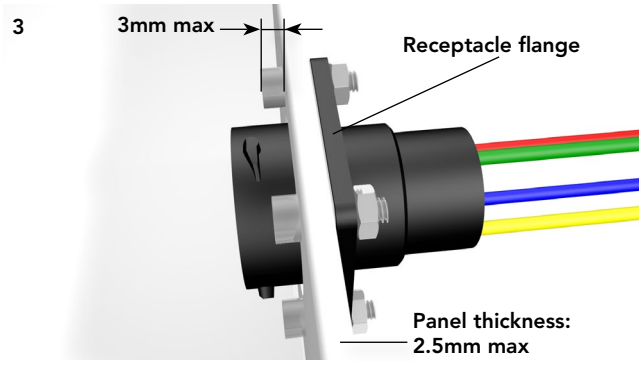

	Shell size				
	10	12	14	16	18
Screw tightening torque (Nm)	0.30/0.40	0.30/0.40	0.30/0.40	0.30/0.40	0.35/0.45

UTS7 Assembly (Mounting Suggestion)

- Strip wires and crimp contacts (see pages 176 & 177)
- Insert contacts into connector cavities (insert manually or use tool RTM205 crimp contacts)
- Seat o-ring, place receptacle in the panel cut-out
- Tighten jam nut

Shell size	Jam nut torque (Nm) maxi	Exterior jam nut dim. (mm)	Ø Wire	
			Standard version	Discrete wire sealing
8	1.5	19.0	3.2 mm max.	from 1.7 mm to 3.0 mm
10	3	22.2		
12	4	27.0		
14	5	30.1		
18	5	36.5		

Threaded receptacle

Shell size	Jam nut torque (Nm) maxi	Threading	P mini (mm)
8	2.5	M12 x 1.5	7.7
10	3.75	M16 x 1.5	
12	3.75	M20 x 1.5	10.4
14	4.18	1/2"	8.3
18	4.76	3/4"	11.6

Crimp or solder version

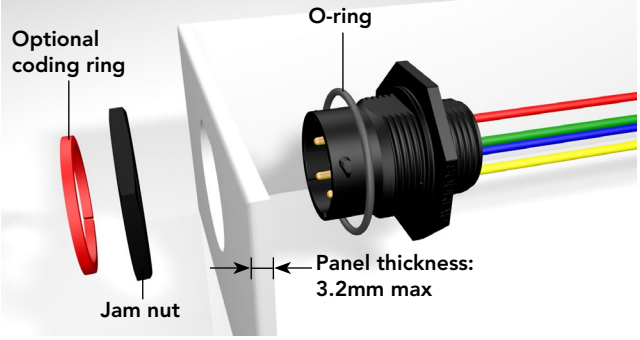

Threaded version

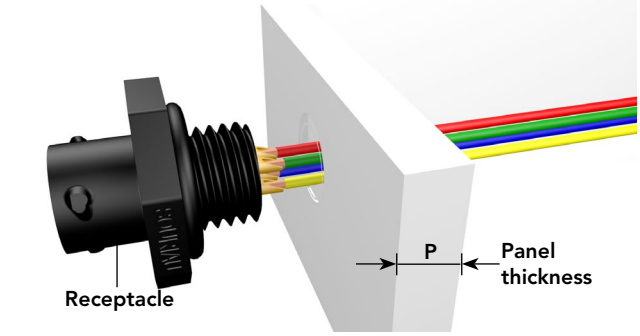

UTS6 or UTS7 with GN Backshell Assembly

- Strip wires and crimp contacts (see pages 176 & 177)
- Insert first contact into the grommet (first contact in cavity A, no tool is required). Then insert the contact in the connector cavity A (insert manually or use tool RTM205)
- Insert the other contacts
- Tighten the nut to rear of either UTS6 or UTS7 (recommended torque values to be applied according to the table below).

Shell size	layout	Nut tightening torque (Nm)	Ø Wire
10	4	1	From 1.7 mm to 3.0 mm
12	8	1.5	
14	7	1.5	
14	12	1.5	

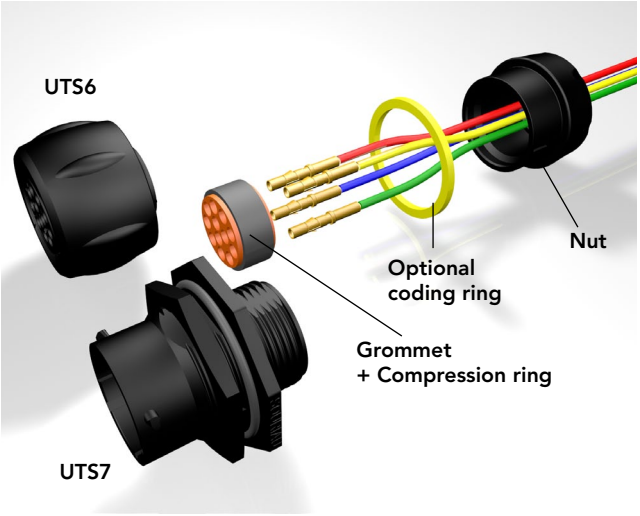

Assembly Instructions (Continued)

UTS1JC or UTS6JC Assembly: Crimp Version

- Slide accessories onto the cable

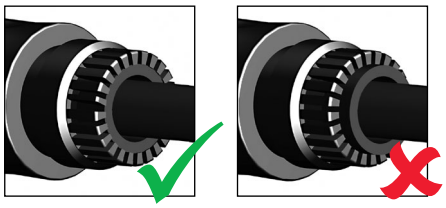

Make sure the seal is positioned as shown.

- Mate the plug with a corresponding counter part
- Strip external cable jacket
- Strip wires and crimp contacts (see pages 176 & 177)
- Insert contacts into connector cavities (insert manually or use tool RTM205)
- Tighten adapter with plug UTS6 or receptacle UTS1, choose right seal (waste the other seal)
- Tighten the nut to rear of either UTS1 or UTS6 (recommended torque values to be applied according table to the right)
- Caution: only one of both delivered gasket should be used !

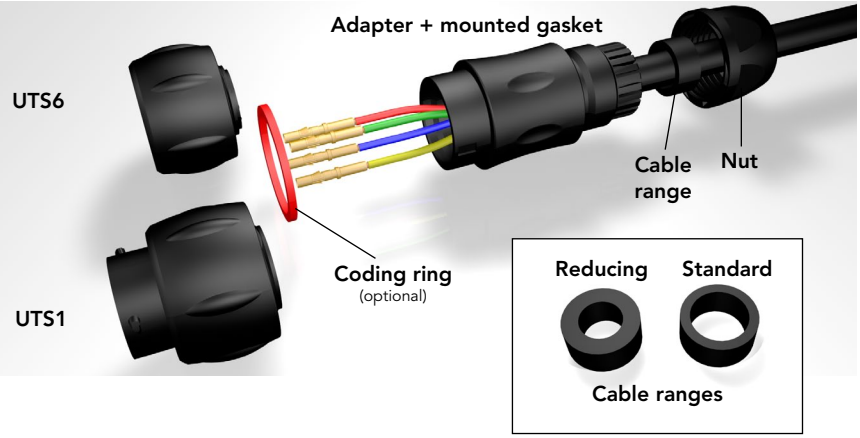

Shell size	Recommended jacket strip length (mm)		Adapter tightening torque (Nm)	Nut tightening torque (Nm)	Ø Cable range Standard seal	Ø Cable range Reducing seal	Ø Wire
	Male	Female					
10	21	29	1.5	1	2.5/8.0	1.5/5.0	From 1.7 mm to 3.0 mm
12	25	33	2	2.5	5.0/12.0	3.0/9.0	
14	29	36	3	2.5	7.0/14.0	5.0/12.0	
18	37	45	4	3.5	9.0/18.0	7.0/16.0	

UTS6JC Assembly: Solder Version

- Slide accessories onto the cable

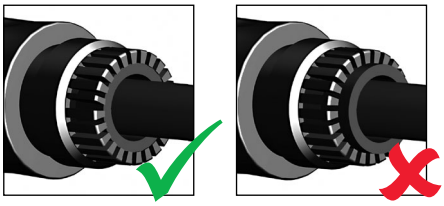

Make sure the seal is positioned as shown.

- Mate the plug with a corresponding receptacle
- Strip external cable jacket
- Strip wires and crimp contacts (see pages 176 & 177)
- Insert contacts into connector cavities (insert manually or use tool RTM205)
- Tighten adapter with plug, choose right seal (waste the other seal)
- Tighten the nut to rear of either UTS6 (recommended torque values to be applied according table to the right)
- Caution: only one of both delivered gasket should be used !

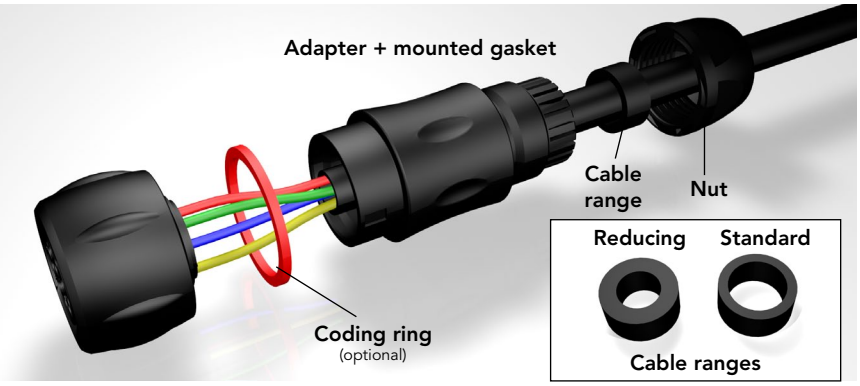

Shell size	Recommended jacket strip length (mm)	Adapter tightening torque (Nm)	Nut tightening torque (Nm)	Ø Cable range Standard seal	Ø Cable range Reducing seal	Ø Wire
	Male					
8	17	1	0.75	2.5/6.5	1.5/5.0	From 1.7 mm to 3.0 mm
10	21	1.5	1	2.5/8.0	1.5/5.0	
12	25	2	2.5	5.0/12.0	3.0/9.0	
14	29	3	2.5	7.0/14.0	5.0/12.0	

Note: all dimensions are in mm

UTS6JC Screw Termination Assembly

- Mate the plug with a corresponding receptacle equiped with its contacts
- Choose and place right seal depending on cable diameter (see table below)

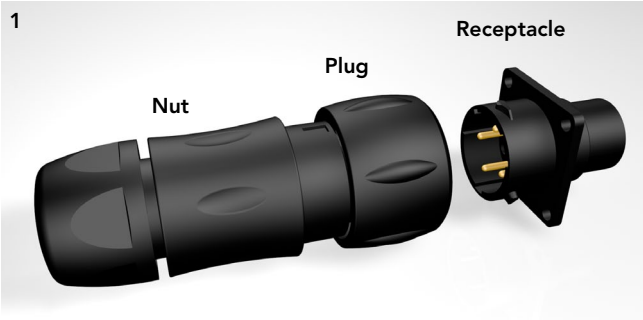

- Slide accessories on the cable
- Strip external jacket (see table below).

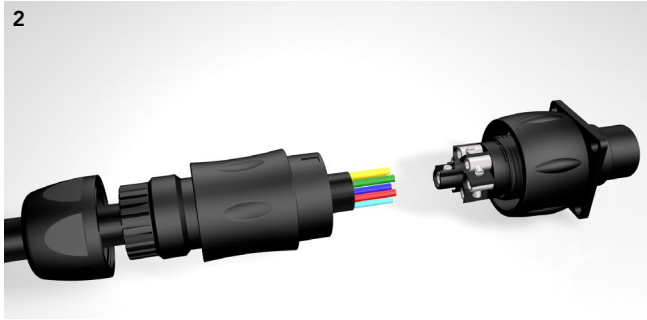

- Strip the wires (strip length 5.8 mm)

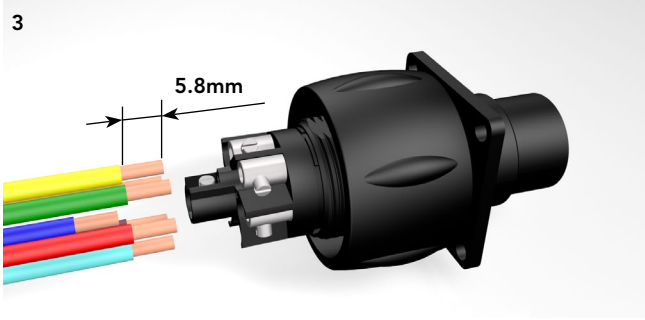

- Place the conductors in the contact barrel. Make sure all conductor strands are inside the barrel
- Tight the contact screws, advised torque 20 Ncm

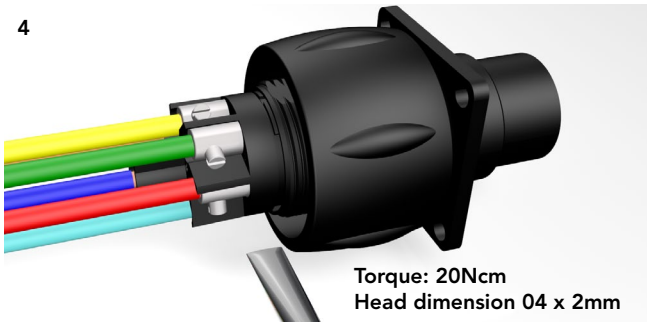

- Check the mechanical cable retention, by gently pull the cable with 2 fingers
- Tighten adaptater with the plug (recommended torque: see table)

- Tighten backshell nut with adapter (recommended torque: see table below) (cables should not turn into the backshell during this operation).

Shell size	Recommended jacket strip length (mm)		Adapter tightening torque (Nm)	Nut tightening torque (Nm)	Ø Cable range Standard seal	Ø Cable range Reducing seal	Ø Wire
	Male	Female					
12	22.8 max	15.1 max	2	2.5	5.0/12.0	3.0/9.0	From 1.7 mm to 3.0 mm
14	26.7 max	18.9 max	3	2.5	7.0/14.0	5.0/12.0	

Note: all dimensions are in mm

Assembly Instructions (Continued)

UTS1GJC or UTS6GJC Assembly

- Slide accessories onto the cable (make sure to keep compression ring on the grommet)
- Strip external cable jacket
- Strip wires and crimp contacts (see pages 176 & 177)
- Insert first contact into the grommet (first contact in cavity A, no tool is required). Then insert the contact in the connector cavity A (insert manually or use tool RTM205)
- Place the grommet and compression ring on the insulator
- Insert the other contacts
- Tighten adapter with plug UTS6 or receptacle UTS1, choose right seal(waste the other seal)
- Tighten the nut to rear of either UTS1 or UTS6 (recommended torque values to be applied according to the table right).

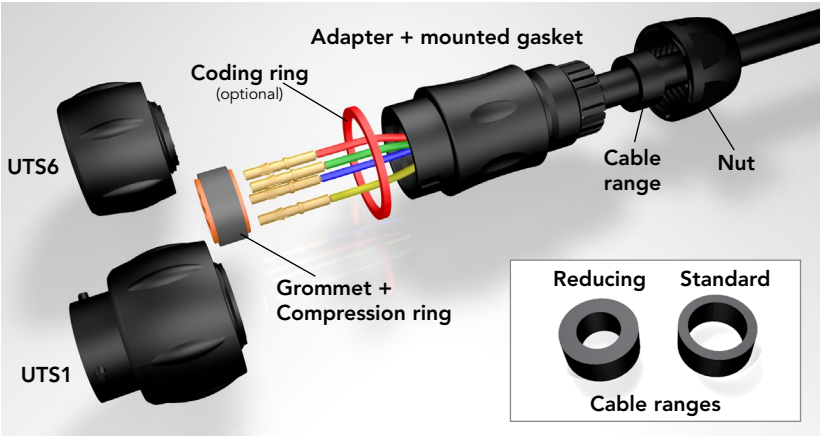

Shell size	Recommended jacket strip length (mm)		Adapter tightening torque (Nm)	Nut tightening torque (Nm)	Ø Cable range Standard seal	Ø Cable range Reducing seal	Ø Wire
	Male	Female					
10	21	29	1.5	2	2.5/8.0	1.5/5.0	from 1.7 mm to 3.0 mm
12	25	33	2	2.5	5.0/12.0	3.0/9.0	
14	29	36	3	2.5	7.0/14.0	5.0/12.0	

Mated Connector Lengths

UTS0 + UTS6

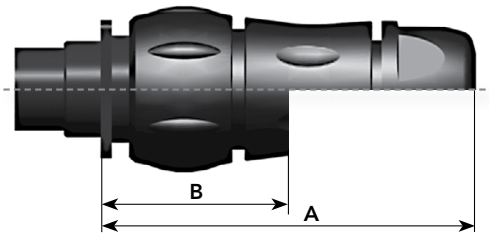

UTS7 + UTS6

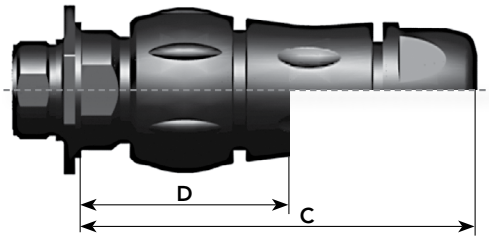

Shell size	UTS0 + UTS6 JC & GJC	UTS0 + UTS6 GN	UTS7 + UTS6 JC & GJC	UTS7 + UTS6 GN
	A max	B max	C max	D max
8	61.1	-	66.6	-
10	73.2	39.6	77.3	43.7
12	77.6	39.4	81.7	43.5
14	83.5	40	87.6	44.1
18	93.1	-	97.2	-

Note: all dimensions are in mm

Mating Procedure

UTS Coupling Procedure

The pictures below provide step by step instructions on how to mate a plug and receptacle connector in order to avoid damaging any of the contacts.

- Identify the primary key of each connector.

1

- Align the primary keys of the connectors.

2

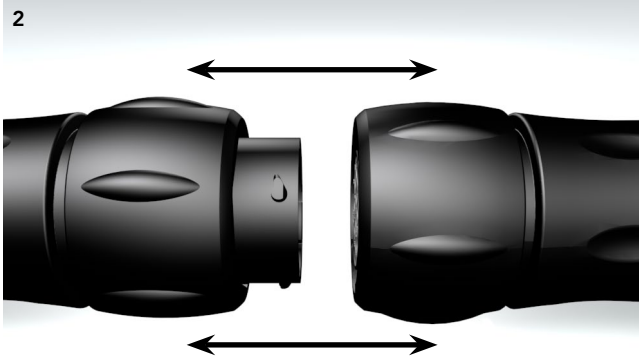

Non correct positioning:

3

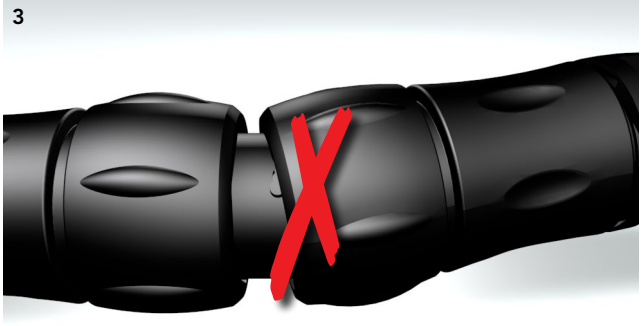

- Offer the plug to the receptacle.

4

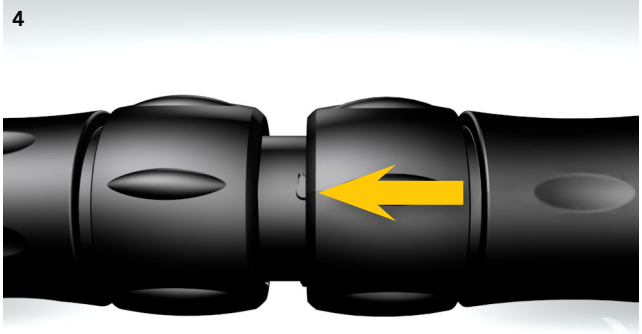

- Turn coupling ring until you hear a 'click'

5

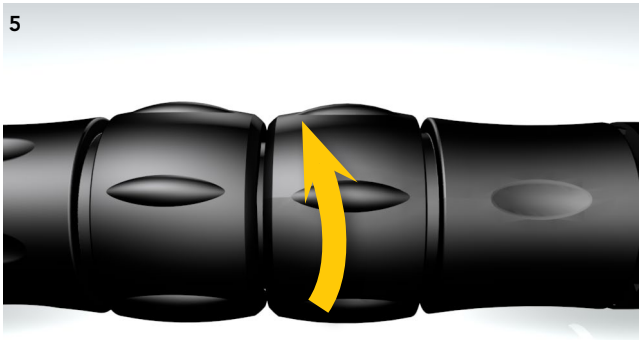

Fastening of cable: In order to avoid any mechanical stress on the connection, cable could be clamp closed to the connector in such a way there is no bending or traction applying on the connector.

6

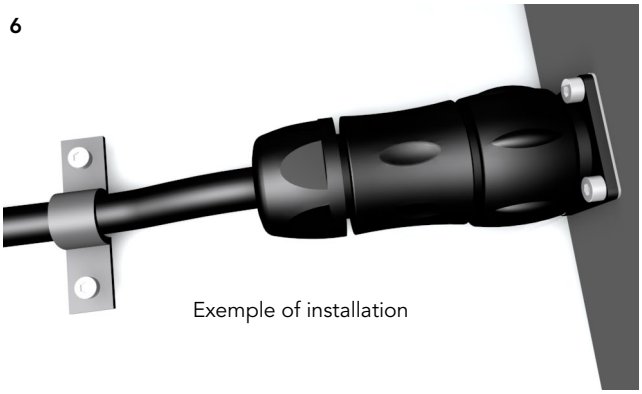

Exemple of installation

Rated Current & Working Voltage

Current Carrying Capacity

The current carrying capacity of a connector is limited by the thermal properties of materials used in its construction. The amount of current that can be handled depends on the size of cable used, the ambient temperature and the heat that is generated inside the connector. Part 3 of the IEC 60512 standard determines through a derating curve, the maximum current permissible, which varies from one layout to another (Fig.1 & Fig.2). Wire size plays an important role in dissipating heat and avoid overheating (Fig.1 & Fig.3).

Please note that the curve should be adjusted when dealing with potential hot spots, which can occur as a result of unequal loading of current across a number of contacts. As a general rule, it is best to avoid placing power handling contacts in the middle of the connector; try to locate them towards the edge where heat can be dissipated more effectively. Eventually you should find a level which represents the permissible operating range:

Fig.1: UTS 12-4 – 1.5mm² wires

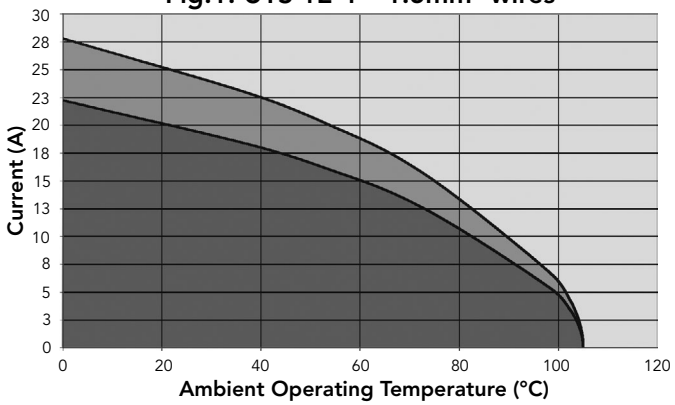

Fig.2: UTS 12-8 – 1.5mm² wires

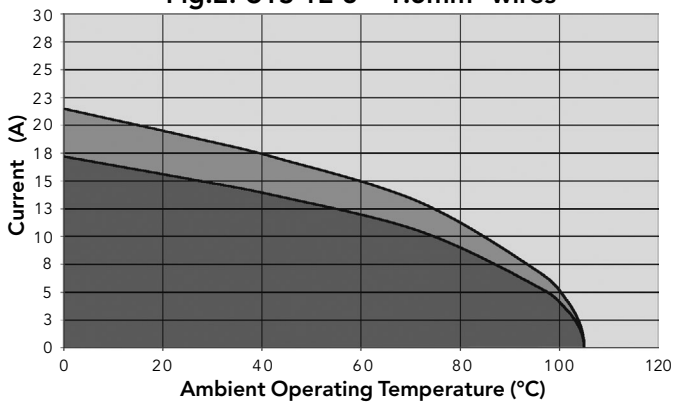

Fig.3: UTS 12-4 – 2.5mm² wires

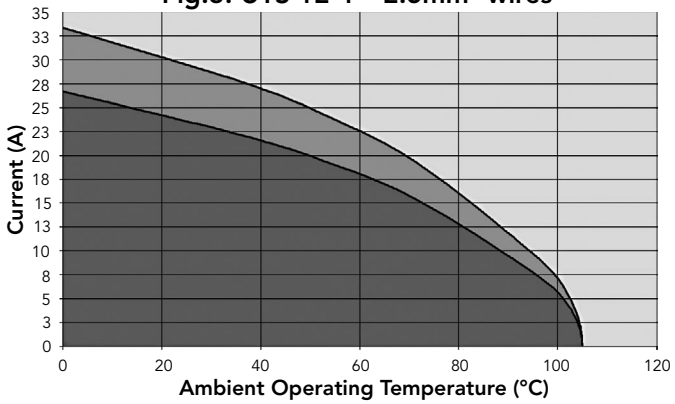

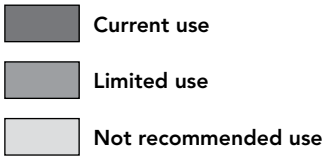

The **rated current** is defined as uninterrupted continuous current that a connector can take when all contacts are energized simultaneously without exceeding the maximum limit of temperature. The earth contact is never loaded.

UV Resistance

Exposure in Natural Environment

Solar radiation affects all materials, but plastics can be susceptible to extreme degradation over time.
The choice of materials for the UTS series was therefore a critical consideration.

All over the world we are not exposed to the same amount of energy given by the sun. The chart shown here clearly illustrates this.

So we performed test according to the ISO 4892-2 and simulated 5 years exposure to outdoor environments (temperature, humidity, etc...)
After this period there was no significant colour variation, no crazing, no cracking and no major variation of mechanical properties.

Yearly mean of daily irradiation in UV (280-400 nm) on horizontal plane (J/cm²) (1990-2004)

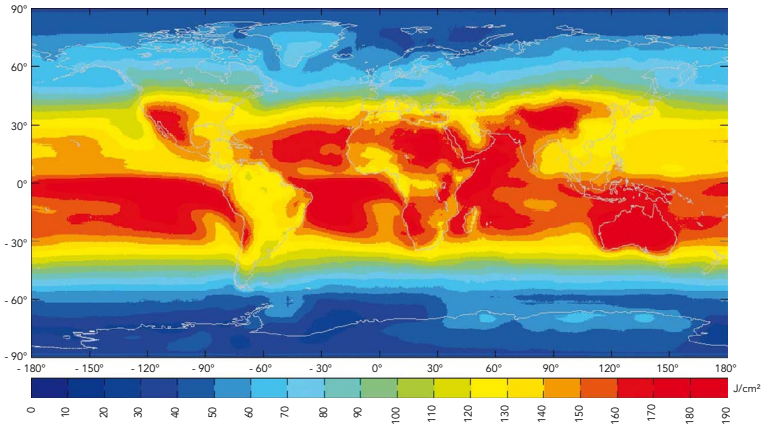

UL94 + UL1977

Underwriter Laboratories

There are two main standards for industrial connectors: UL94 & UL1977

UL94

This standard is dedicated to plastics flammability. It characterises how the material burns in various orientation and thicknesses.

The UTS series has been rated at **V-0** & **HB**.

Procedure: A specimen is supported in a vertical or horizontal position and a flame is applied to the bottom of the specimen. The flame is applied for ten seconds and then removed until flaming stops, at which time the flame is reapplied for another ten seconds and then removed. Two sets of five specimens are tested.

V-0 Vertical burning:

- Specimens must not burn with flaming combustion for more than 10 seconds after each test flame application
- Total flaming combustion time must not exceed 50 seconds for each set of 5 specimens
- Specimens must not burn with flaming or glowing combustion up to the specimen holding clamp
- Specimens must not drip flaming particles that ignite the cotton
- No specimen can have glowing combustion remain for longer than 30 seconds after removal of the test flame.

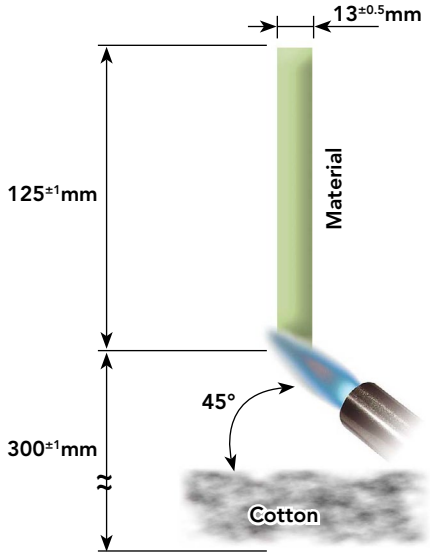

HB Horizontal burning:

- A material classified HB shall not have a burning rate exceeding 40 mm per minute over a 75 mm span for specimens having a thickness of 3.0 to 13 mm
- A material classified HB shall not have a burning rate exceeding 75 mm per minute over a 75 mm span for specimens having a thickness less than 3.0 mm
- A material classified HB shall cease to burn before the 100 mm reference mark.

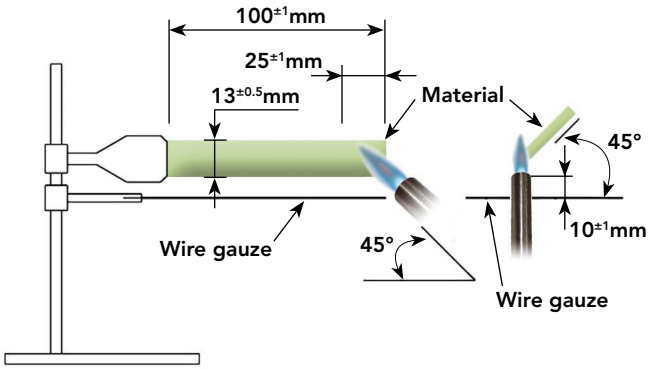

Underwriter Laboratories

UL1977

There are several standards which deal with plug and receptacle. Each of them is only for a small area of applications. It could be telecommunication, etc. The UL 1977 covers single and multipole connectors intended for factory assembly.

Requirements apply to devices taking into account intensity and voltage. The categories are as follows:

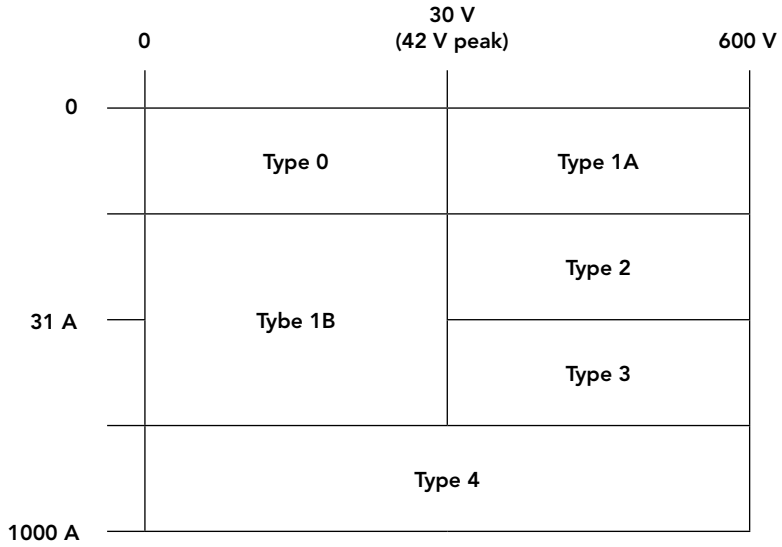

According to above table, the level of performance that has to be reached could be different. Most of them are explained in the following page.

Insulating materials:

Material uses for electrical insulation, as a minimum, have to comply with the characteristics shown below:

• Minimum ratings for polymeric materials

Type	Flame rating	Relative thermal index (RTI) Electrical/mechanical w/o impact */**
0	-	50/50
1A	HB	50/50
1B	HB	50/50
2	HB	50/50
3	HB	50/50
4	HB	50/50

* The RTI of the material shall not be lower than the temperature measured during the Temperature Test.
** For a thickness less than that for which a value has been established, the RTI of the minimum thickness with an established value shall be used.

Assembly:

Connector has to be keyed to prevent any mismating that can damage the machine or hurt the user. In the same way, plugs and sockets have to be equipped to protect persons against contact with live parts.
Finally the identified grounding contact shall be located so that the corresponding electrical continuity has to be completed before any other contact.

UL94 + UL1977 (Continued)

Underwriter Laboratories

UL1977

Spacing:

For a 250V max connector, distance through air or over material shall be 1.2mm whereas from 250V to 600V connector the spacing is 3.2mm minimum. These distances have to be taken between uninsulated live parts as shown in the matrix below:

• Applicability of spacing requirements

Type	Uninsulated live part - uninsulated live part of opposite polarity	Uninsulated live part - uninsulated grounded metal part	Uninsulated live part - exposed dead metal part
0	No	No	No
1A	Yes	Yes	Yes
1B	Yes	Yes	No
2	Yes	Yes	Yes
3	Yes	Yes	Yes
4	Yes	Yes	Yes

An alternative way to determine voltage rating is with the Dielectric-Withstand test. If during one minute there is no arc-over or breakdown the rated voltage is given as shown below:

a) 500 volts for a type 1B device
b) 1000 volts plus twice rated voltage for types 1A, 2, 3 and 4 devices.

Marking:

A device shall be legibly marked with the manufacturer's trade name, trade mark, or other descriptive marking by which the organisation responsible for the product may be identified. (Exception: If the device is too small, or where the legibility would be difficult to attain, the manufacturer's name, trademark, or other descriptive marking may appear on the smallest unit container or carton)

The following shall be marked on the device or on the smallest unit container or carton or on a stuffer sheet in the smallest unit container or carton:

a) The catalog number or an equivalent designation
b) The electrical rating in both volts and amperes, if assigned
c) Whether ac or dc, if restricted
d) Flammability class, if identified

Example - Marking for the arrangement 10-3: **10A 500V UL94 V-0**

IEC 61984 & IP Codes Explained

IEC 61984

The norm is dedicated to connectors with rated voltage above 50V and up to 1000V and rated currents up to 125A per contact.
Depending on your application connectors should be compliant with another standard. This has to be double checked with the customer.

There are a lot of constructional requirements and performances specified in that standard. Most of them are illustrated in greater details hereafter.

Provisions for earthing:

The UTS connector is intended to be used on Class I or Class III (see IEC 61140) systems. Even if the purpose of our connector is not to interrupt current, there is a need to add a protective earth contact. This one shall be a "First mate, last break" style. Critically, among all of the normal assumptions we make in designing a connector, this contact has to be considered as a live part and must be protected attached to the ground wire.

IP Code:

IP is a coding system defined by the IEC 60529 to indicate the degrees of protection provided by an enclosure. The aim of this is to give information regarding the accessibility of live parts against ingress of water and other foreign bodies.

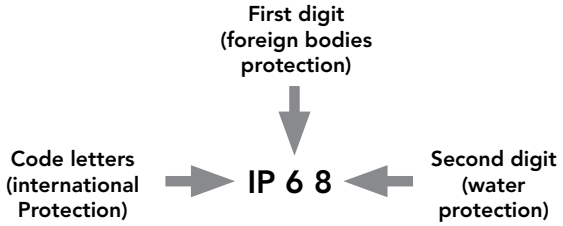

1st digit	Degree of protection
0	No protection against accidental contact. No protection against solid foreign bodies.
1	Protection against contact with any large area by hand and against large solid foreign bodies with a diameter bigger than 50 mm.
2	Protection against contact with the fingers. Protection against solid foreign bodies with a diameter bigger than 12 mm.
3	Protection against tools, wires or similar objects with a diameter bigger than 2.5 mm. Protection against small solid bodies with a diameter bigger than 2.5 mm.
4	Same as 3 however diameter is bigger than 1 mm.
5	Full protection against contact. Protection against interior injurious dust deposits.
6	Total protection against contact. Protection against penetration of dust.

2nd digit	Degree of protection
0	No protection against water.
1	Drip-proof. Protection against vertical water drips.
2	Drip-proof. Protection against water drips up to a 15° angle.
3	Spray-proof. Protection against diagonal water drips up to a 60° angle.
4	Splash-proof. Protection against splashed water from all directions.
5	Hose-proof. Protection against water (out of a nozzle) from all directions.
6	Protection against temporary flooding.
7	Protection against temporary immersions.
8	Protection against water pressure. Pressure to be specified by supplier.

UTS offers high sealing performance IP68 / 69K…
Even in dynamic situations.

In addition to the IEC 60529 we conjointly use the DIN 40050 part 9 which are dedicated to road vehicles. The main differences are:

- **First digit:** 5 replaced by 5K, 6 by 6K. In the DIN the tested equipment is not depressurized as it is in the IEC.
- **Second digit:** 5K and 6K has been added and are equivalent respectively to 5 and 6 but with higher pressure. 9K which represents the High pressure cleaning.

9K	High pressure hose-proof. Protection against high pressure water (out of a nozzle) from all directions.

IEC 61984 ed.2.0 "Copyright © 2008 IEC Geneva, Switzerland.www.iec.ch"
IEC 60664-1 ed.2.0 "Copyright © 2007 IEC Geneva, Switzerland.www.iec.ch"

IEC 61984 & IP Codes Explained (Continued)

IEC 61984

Overvoltage

UTS connectors are qualified to be used on systems rated at Overvoltage category III

Per the IEC 60664-1 (formely VDE 0110) each category is linked to the end application and where the device will be implemented:

- **Category IV** (primary overcurrent protection equipment):
  Origin of the installation

- **Category III** (any fixed installation with a permanent connection)
  Fixed installation and equipment and for cases where the reliability and the availability is subject to special requirements

- **Category II** (domestic appliances):
  Energy consuming equipment to be supplied from the fixed installation

- **Category I** (protected electronic circuit):
  For connection to circuit in which measures are taken to limit transient overvoltage.

Pollution degree

Per the IEC 60664-1 (formerly VDE 0110) the environment affects the performance of the insulation. Particles can build a bridge between two metal parts. As a rule dust mixed with water can be conductive and more generally speaking metal dust is conductive. Finally, the standard defines 4 levels of pollution:

- **Degree 1** (Air conditioned dry room):
  No pollution or only dry, non conductive pollution occurs. The pollution has no influence.

- **Degree 2** (Personal computer in a residential area):
  Only non conductive pollution occurs except that occasionally a temporary conductivity caused by condensation is to be expected.

- **Degree 3** (Machine tools):
  Conductive pollution occurs or dry non-conductive pollution occurs which becomes conductive due to condensation which is to be expected.

- **Degree 4** (Equipments on roof, locomotives):
  Continuous conductivity occurs due to conductive dust, rain or other wet conditions.

Finally, the harsher the environment is, the longer clearance and creepage distances should be. Nonetheless, according the IEC 61984, enclosure rated at IP54 or higher can be dimensioned for a lower pollution degree. This applies to mated connectors disengaged for test and maintenance.

Marking

The marking should give enough details to the user to know what the main characteristics are and without going deep in technical documentation. Below examples identify the suitability of the connector:

- **Example 1:**
  Marking of a connector with rated current 16A, rated voltage 400V, rated impulse voltage 6kV and pollution degree 3, 2 and 1 for use in any system, preferably unearthed or delta-earthed systems:

  16A 400V 6kV 3

- **Example 2:**
  Marking of a connector with rated current 16A, rated insulation voltages line-to-earth 250V, line-to-line 400V, rated impulse voltage 4kV and pollution degree 3, 2 and 1 for use in earthed systems:

  16A 250V 400V 4kV 3

IEC 61140 Explained

IEC 61140

On a daily basis, we are using many electrical appliances, some are grounded, and some are not. The levels of grounding protection are clearly defined by the International Electrotechnical Commission standard IEC 61140, a standard that has an influence on our connectors and how they should be used; our customers therefore need to pay particular attention to the three categories defined within this standard to ensure compatibility with their system. Everything explained hereafter is valid for connectors not intended to interrupt current.

Class I:

Devices which belong to this category have their chassis grounded via the ground wire (green/yellow in Europe, green in the US, Canada and Japan). A fault in the appliance might cause a live conductor to energize the casing. In this case, the current flows to the ground conductor and the circuit interrupter will cut off the power supply. In case of the UTS series, it means the envelope (coupling ring, backshell and housing) may become live, therefore, care needs to be taken to attach the connector to the ground. This is usually done via the ground conductor using a splice between the ground contact and the housing.

Class II:

Products in this category have reinforced insulation, meaning that the casing does not need to be connected to ground. In this case, the possibility of electric shock has been removed. Most of the time, reinforced insulation means double insulation, i.e. the second layer will take over the first one in case the first one fails. The UTS series is not designed to comply with this standard, so we cannot recommend it for this product category.

Note: UL 1310 also defines a class II device, but in that case this is just to set the upper limit of use, like a wall charger for our cell phone.

Class III:

In this category, electrical appliances are fed by a low voltage source (<48VAC or < 120VDC). In normal conditions live conductors can be accessible without any risk for the end user. No particular attention needs to be taken in regards to UTS series when it comes to a class III device.

Conclusion:

UTS series can be used in class I and class III environments, but each category affects the product performance. Throughout the catalog, current and voltage ratings have been given for class I devices keeping in mind the ground conductor needs to be attached according to recommended wiring instructions.

Note: Special applications like recreational vehicles are not under the scope of the IEC 61140.

What is NEMA Rating ?

• NEMA ratings vs IP ratings

Whereas IP ratings only consider protection against ingress of foreign bodies (first digit) and ingress of water (second digit), NEMA ratings consider these but also verify protection from external ice, corrosive materials, oil immersion, etc.

The correlation between NEMA & IP being limited only to dust and water, we can state that a NEMA type is equivalent to an IP rating but it is not possible to say the contrary.

Below a list of some NEMA standards:

Enclosure rating	IP20	IP22	IP55	IP64	IP65	IP66	IP67	IP68
Type 1	•							
Type 3				•				
Type 3R		•						
Type 3S				•				
Type 4						•		
Type 4X						•		
Type 6							•	
Type 6P								•
Type 12			•					
Type 13					•			

• indicates compliance

Type 6 rating can be either Type 6 or Type 6P - please see below:

6	IP67	Enclosures constructed for either indoor or outdoor use to provide a degree of protection to personnel against incidental contact with the enclosed equipment, falling dirt, hose-directed water, the entry of water during **occasional temporary** submersion at a limited depth and damage from external ice formation.
6P	IP68	Enclosures constructed for either indoor or outdoor use to provide a degree of protection to personnel against incidental contact with the enclosed equipment, falling dirt, hose-directed water, the entry of water **during prolonged** submersion at a limited depth and damage from external ice formation.

Ethernet for the Layman

In order to explain basic Ethernet theory, we can use a functional comparison to a busy city with highways, buildings and cars. To illustrate this, the table below provides correlation between the different components/pieces/links that encompass Ethernet network connectivity, and the larger scale infrastructure of a metropolitan city.

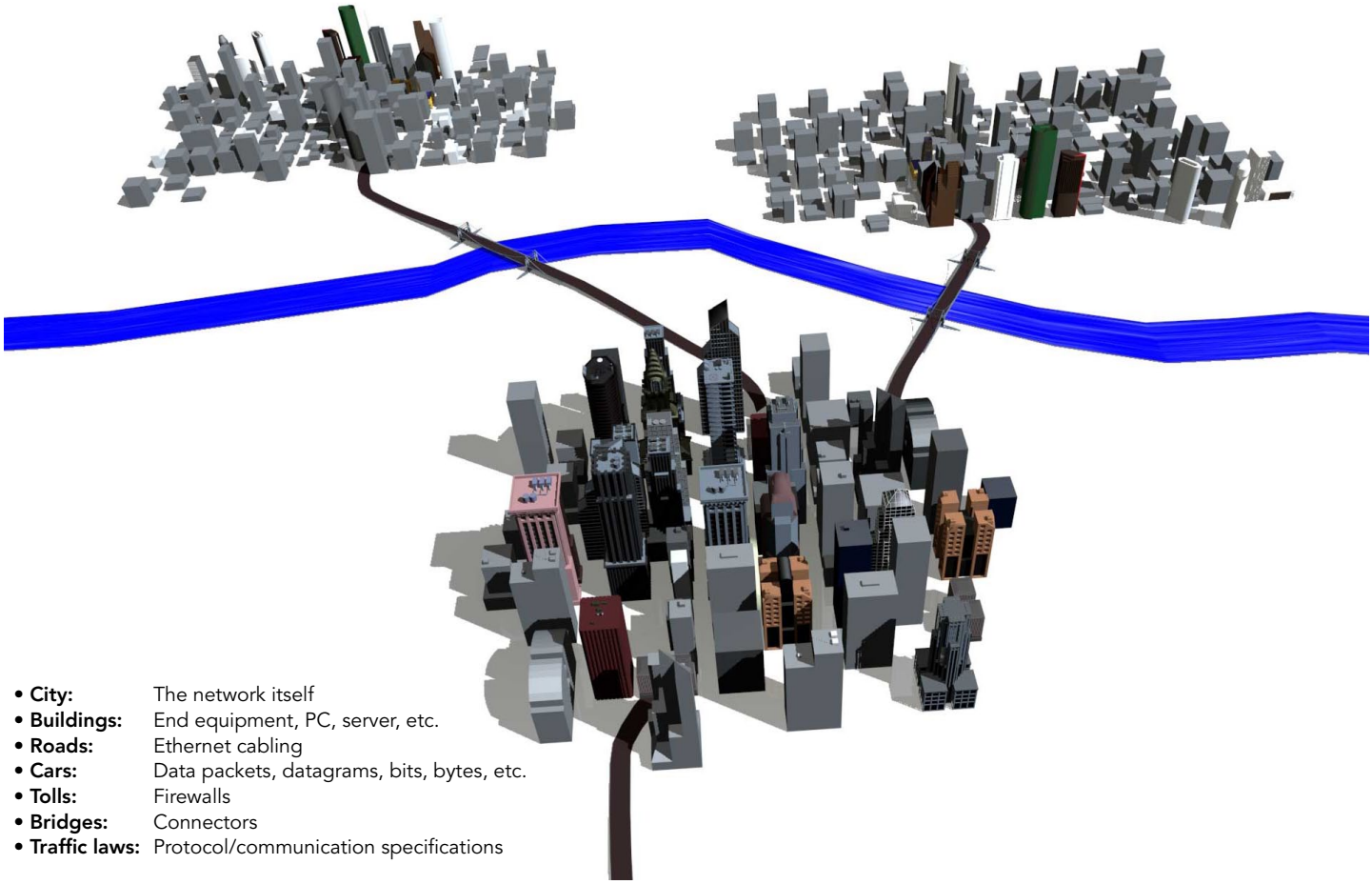

- **City:** The network itself
- **Buildings:** End equipment, PC, server, etc.
- **Roads:** Ethernet cabling
- **Cars:** Data packets, datagrams, bits, bytes, etc.
- **Tolls:** Firewalls
- **Bridges:** Connectors
- **Traffic laws:** Protocol/communication specifications

Ethernet Basics

Ethernet is a widely used communications protocol that is used to transmit data packets (datagrams) between network devices. Imagine a highway in a large metropolitan area six lanes wide at rush hour. The vehicles on the highway need rules to follow so that they get to their destination without crashing into each other. In an Ethernet network link, there could be 100 million bits of information transmitted in one second. In the Ethernet standard, there exist rules to govern packet structure, transmission requirements, error correction, communication with end equipment, etc.

Examining the differences between 100Mhz, 100 Base TX, Cat5e/Cat6. What does it all mean?

When discussing connectors and Ethernet, there are a few key details to be aware of:

- 100Mhz is a measurement of Frequency for the signal
  - Comparable to the Speed Limit of a highway
- 100BaseTX (or Fast Ethernet) is an Ethernet link standard and identifies available link bandwidth. The bandwidth is measured in units of MBits/S (megabits per second)
  - Comparable to the number of cars that pass a point in one second
- Cat5e/Cat6 are an EIA/TIA standard for performance and physical characteristics for cables and connectors
  - Comparable to performance specifications of the car and highway.

In connectors and cables, Fast Ethernet uses 2 pairs. One for transmit and one for receive. This way data traffic can flow in both directions simultaneously.

Ethernet for the Layman (Continued)

Souriau offering:

Standard solutions.

UTS Hi seal size 8, 4 contacts

1 (Pair 1) ➡ A
2 (Pair 1) ➡ C
3 (Pair 2) ➡ B
4 (Pair 2) ➡ D

8E4/8D4
4 Ø 1mm (#20)

UTS size 10, 6 contacts

1 (Pair 1) ➡ A
2 (Pair 1) ➡ B
3 (Pair 2) ➡ E
4 (Pair 2) ➡ D

106/10E6/10D6
6 Ø 1mm (#20)

Shielding continuity done in cavity C&F. Note: Shielding can be replaced by DC power.

UTS size 12, 10 contacts

1 (Pair 1) ➡ C
2 (Pair 1) ➡ B
3 (Pair 2) ➡ G
4 (Pair 2) ➡ H

1210/12E10/12D10
10 Ø 1mm (#20)

What about using coax contacts ?

Ethernet twisted pairs carry a symmetrical (balanced) signal. Once terminated into a coax contact, the inner core will be protected by a shield - but not the outer contact. Because of EMI issues, the signal will no longer be balanced. Conclusion - it does not work and is not recommended.

What about using Quadrax contacts ?

The Quadrax contact is used in railway applications because of the use of quad cable. In this specific market, the standard Ethernet twisted pairs wires cannot be offered, they are too thin and often solid (not stranded).

In the rest of industry, UTP (Unshielded Twisted Pairs) cables are widely used. The Quadrax contact is not designed to terminate them. And thus, are not advised for industrial applications.

Conclusion

To carry 100Mb/s data signal, 100BaseTX or Fast Ethernet recommends the use of Cat5e connectors as well as Cat5e cable with the support of a 100MHz signal. Nevertheless, a 100Mb/s signal can be transmitted in certain conditions (short distance, only one connector, lower frequency but a different code) thru many other connection materials - not necessarily Cat5e rated.

UTS SERIES

© 2014 SOURIAU - SOURIAU is a registratred trademark

Appendices

- #16 Coaxial Contacts/Cabling Notices 200
- Glossary of Terms 207
- Discrimination/Keying Methods 208
- Part number Index 209

#16 Coaxial Contacts

Coaxial Cable - Contact Monocrimp and Multipiece

Cable type	Impe-dance	Contact type	Ø over jacket		Ø over dielectric		Inner cond size	Ø outer braid		Male contact kit for coaxial cable	Female contact kit for coaxial cable
			inch	mm	inch	mm	Ext. Ø mm	inch	mm		
RG161/U	75	Multi piece	0.09"	2.29	0.057"	1.45	-	-	-	RMDXK10D28	RCDXK1D28
RG179A/U	75		0.105"	2.67	0.063"	1.6	0.3	0.084"	2.13 max		
RG179B/U	75		0.105"	2.67	0.063"	1.6	0.3	0.084"	2.13 max		
RG187/U	75		0.11"	2.79 max	0.06"	1.52	0.3	-	-		
RG188/U	50		0.11"	2.79 max	0.06"	1.52	0.51	0.078"	1.98 max		
RG174/U	50		0.11"	2.92	0.06"	1.52	0.48	0.088"	2.24 max		
AMPHENOL 21-598	50		0.105"	2.67	0.06"	1.52	0.48	-	-		
RG196/U	50		0.08"	2.03 max	0.034"	0.086	0.3	-	--		
RG178A/U	50		0.075"	1.91	0.034"	0.86	0.3	0.054"	1.37 max		
RG/188A/U	50	Mono crimp	0.110"	2.79	0.06"	1.52	0.51	0.078"	1.98 max	RMDX6036D28	RCDX6036D28
KX21TVT (europe) RG178 B/U	50		0.075"	1.91	0.034"	0.86	0.3	0.054"	1.37 max	RMDX6034D28	RCDX6034D28
RG178 / BU	50		0.075"	1.91	0.034"	0.86	0.3	0.054"	1.37 max	RMDX6050D28	RCDX6016D28
RG174/U	50		0.115"	2.92	0.06"	1.52	0.48	0.088"	2.24 max	RMDX6032D28	RCDX6032D28
RG188A/U	50		0.11"	2.79	0.06"	1.52	0.51	0.078"	1.98 max	RMDX6036D28	RCDX6036D28
RG316/U	50		0.107"	2.72	0.06"	1.52	0.51	0.078"	2.05 max	RMDX6036D28	RCDX6036D28
raychem 5024A3111	50		0.12"	3.05	0.083"	2.11	0.64	0.097"	2.46	RMDX6052D28	RCDX6052D28
raychem 5026e1614	50		0.083"	2.11	0.05"	1.27	0.48	0.067"	1.7	RMDX6036D28	RCDX6036D28
surprenant pn 8134	-	Multi piece	0.1"	2.54	0.058"	1.47	0.3	-	-	RMDXK10D28	RCDXK1D28
PRD PN 247AS-C1123-001	-	Mono crimp	0.103"	2.62	0.06"	1.52	0.51	0.078"	1.98	RMDX6018D28	RCDX6018D28
PRD PN 247AS-C1251	-		0.092"	2.34	0.05"	1.27	0.64	0.067"	1.7	RMDX6018D28	RCDX6018D28
JUDD C15013010902	-		0.087"	2.13	0.05"	1.27	0.48	0.066"	1.67	RMDX6036D28	RCDX6036D28
CDC PIN22939200	-		0.09"	2.29	0.048"	1.22	0.3	0.064"	1.63	RMDX6046D28	RCDX6016D28
CDC PIN22939200	-		0.09"	2.29	0.048"	1.22	0.3	0.064"	1.63	RMDX6050D28	RCDX6016D28
CDC PIN245670000	-		0.104"	2.64	0.067"	1.7	0.3	0.083"	2.11	RMDX6050D28	RCDX6016D28
ampex	-		0.114"	2.9	0.075"	1.91	0.38	0.09"	1.29	RMDX6032D28	RCDX6032D28
TI PN 920580	-		0.7"	1.78	0.038"	0.96	0.48	0.054v	1.37	RMDX6024D28	RCDX6024D28
Honeywell PN 58000062	-		0.12"	3.05	0.077"	1.96	0.41 solid	0.096"	2.44	RMDX6026D28	RCDX6026D28
-	-		0.104"	2.64	0.067"	1.7	0.3	-	2.11	RMDX6050D28	-
-	-		0.09"	2.29	0.048"	1.22	0.3	-	1.63	RMDX6050D28	-
-	-		0.114"	2.9	0.075"	1.91	0.38	-	1.29	RMDX6032D28	RCDX6032D28
-	-		0.07"	1.78	0.038"	0.96	0.48	-	1.37	RMDX6024D28	RCDX6024D28
-	-		0.12"	3.05	0.077"	1.96	0.41	-	2.44	RMDX6026D28	RCDX6026D28

Twisted Cable - Contact Monocrimp and Multipiece

Cable type	Contact type	Inner AWG cond	Ø over jacket (single wire)		Inner cond size		Ø outer braid		Male contact kit for coaxial cable	Female contact kit for coaxial cable
			inch	mm	Stranded definition	Ext. Ø mm	inch	mm		
2#24 stranded MIL-W-16878 type B	Multi piece	24	0.049"	1.24 max	7/.008	-	-	-	RMDXK10D28	RCDXK1D28
2 #24 solid MIL-W-76 type LW		24	0.047"	1.12 max	1/.0201	-	-	-	RMDXK10D28	RCDXK1D28
2 #26 stranded MIL-W-76 type LW or MIL-W-16878 type B&E		26	0.043"	1.09 max	7/.0063	0.16	-	-	RMDXK10D28	RCDXK1D28
2 #28 solid MIL-W-81822/3		28	0.028"	0.71 max	-	-	-	-	RMDXK10D28	RCDXK1D28
Twisted pair 1/.201 solid MIL-W-76 type LW or MIL-W-16878		26	0.044"	1.12 max	1/.0201	0.511	-	-	RMDXK10D28	RCDXK1D28
Twisted pair solid MIL-W-81822/3		28	0.028"	0.71 max	1/.0126	0.32	-	-	RMDXK10D28	RCDXK1D28
#28 7/.0036 per Hitachi spec ec-711 (13-2820)	Mono crimp	-	0.046"	1.17	7/.0036	-	-	-	RMDX6031D28 + YORX090	RCDX6031D28 + YORX090
20218201		-	0.028"	0.71	-	-	-	-	RMDX6031D28 + YORX090	RCDX6031D28 + YORX090
#30 solid		-	0.025"	0.64	-	-	-	-	RMDX6015D28 + YORX090	RCDX6015D28 + YORX090
#26 7/.0063		26	0.028"	0.71	7/.063	0.16	-	-	RMDX6031D28 + YORX090	RCDX6031D28 + YORX090
#26 19/.004		26	0.049"	1.24	19/.004	-	-	-	RMDX6019D28 + YORX090	RCDX6019D28 + YORX090
#24 7/.008		24	0.049"	1.24	7/.008	-	-	-	RMDX6019D28 + YORX090	RCDX6019D28 + YORX090
#24 19/.005		24	0.057"	1.45	19/.005	-	-	-	RMDX6019D28 + YORX090	RCDX6019D28 + YORX090
-		26	-	1.25	-	-	-	19x0.1	RMDX6019D28 + YORX090	RCDX6019D28 + YORX090
-		24	-	1.25	-	-	-	7x0.2	RMDX6019D28 + YORX090	RCDX6019D28 + YORX090
-		24	-	1.45	-	-	-	19x0.13	RMDX6019D28 + YORX090	RCDX6019D28 + YORX090
-		26	-	0.7	-	-	-	7x0.16	RMDX6031D28 + YORX090	RCDX6031D28 + YORX090

#16 Coaxial Contacts (Continued)

Twisted Pair Cable Multipiece Contact Cabling

Cable reference	Contact type	Male contact	Female contact	Crimp tool	Die set	Stop bushing	Cable strip length			Inner conductor crimp		Braid crimp	
							A	B	C	g dim	t dim	g dim	t dim
2#24 stranded mil w 16878 type B	Multi piece	RMDXK10D28	RCDXK1D28	M10S1J	-	-	See assembly notice						
2 #24 solid mil-w-76 type LW													
2 #26 stranded mil w 76 type LW or mil w16878 type B & E													
2 #28 solid mil-w-81822/3													
twisted pair 1/.201 solid mil w 76 type LW or mil w 16878													
twisted pair solid mil w 81822/3													

Female contact

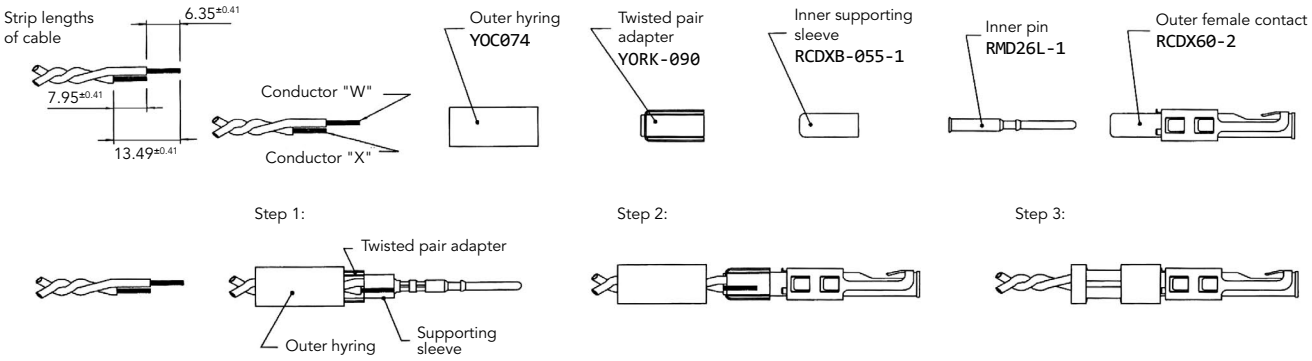

Male contact

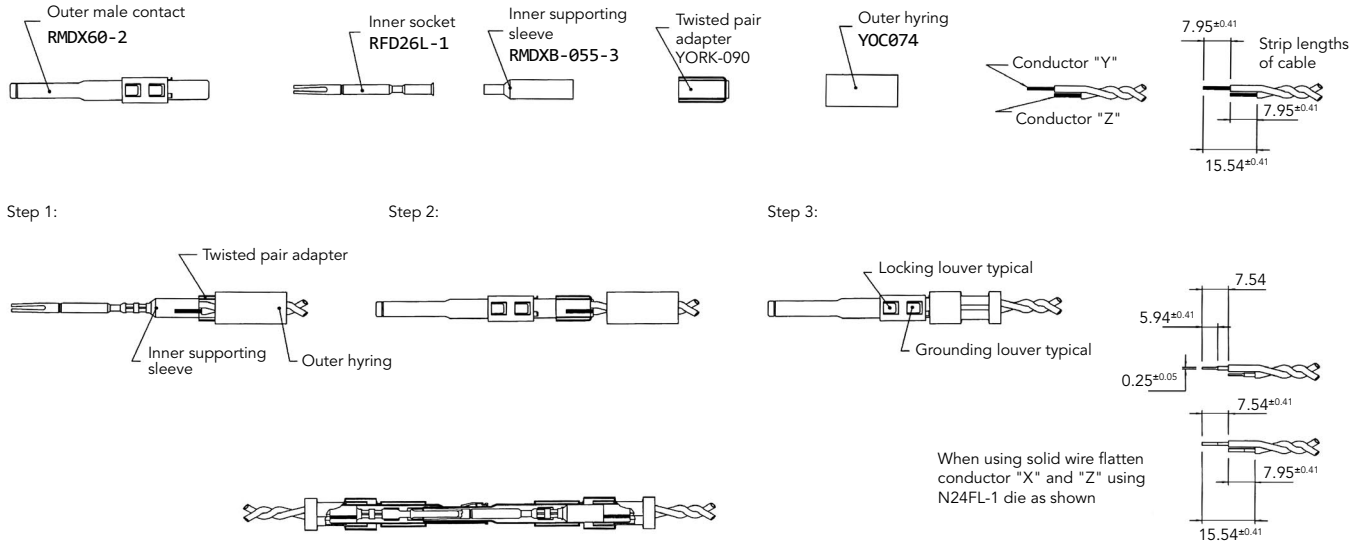

Note : all dimensions are in mm

Twisted Pair Cable Monocrimp Contact Cabling

Cable reference	Contact type	Male contact	Female contact	Crimp tool	Die set	Stop bushing	Cable strip length			Inner conductor crimp		Braid crimp	
							A	B	C	g dim	t dim	g dim	t dim
#28 7/.0036 per Hitachi spec ec-711 (13-2820)	Mono crimp	RMDX6031D28 + YORX090	RCDX6031D28 + YORX090	M10S1J	S80	SL105	4.7	6.1	4.32	1.30 to 1.12	1.4 to 1.22	2.97 to 2.84	3.07 to 2.9
20218204					S80	SL105	3.94	6.1	3.16	1.30 to 1.17	1.4 to 1.22	2.97 to 2.84	3.07 to 2.79
#30 solid					S83	SL105	4.7	6.1	4.06	1.22 to 1.12	1.35 to 1.22	2.97 to 2.84	3.12 to 2.95
#26 7/.0063					S80	SL105	4.7	6.1	4.06	1.30 to 1.17	1.4 to 1.22	2.97 to 2.84	3.07 to 2.9
#26 19/.004					M10SG8 ASSY'Y TOOL DIE SET STOP BUSHING M10S1J TOOL		4.7	6.1	4.06	1.22 to 1.17	1.35 to 1.22	2.84 to 2.79	3.12 to 2.97
#24 7/.008							4.7	6.1	4.06	1.22 to 1.17	1.35 to 1.22	2.84 to 2.79	3.12 to 2.97
#24 19/.005							4.7	6.1	4.06	1.22 to 1.17	1.35 to 1.22	2.84 to 2.79	3.12 to 2.97
AWG26 (19x0.1)					M10SG8 crimping kit		4.7	6	4				
AWG24 (7x0.2)													
AWG24 (19x0.13)													
AWG26 (7x0.16)					S80	SL105							

- Select appropriate monocrimp coax twisted pair contact and cable combination.
- Select appropriate crimp tooling (hand tool, S-die set, stop bushing).
- Strip the twisted pair cable to the designated wire strip lengths.
- Insert the stripped cable into the contact. One cable is to be inserted into the inside diameter of hyring, and pushed forward into the inner contact. The second cable is to be inserted between the outside diameter of hyring and the inside diameter of the outer contact body.
- Crimp the contact.

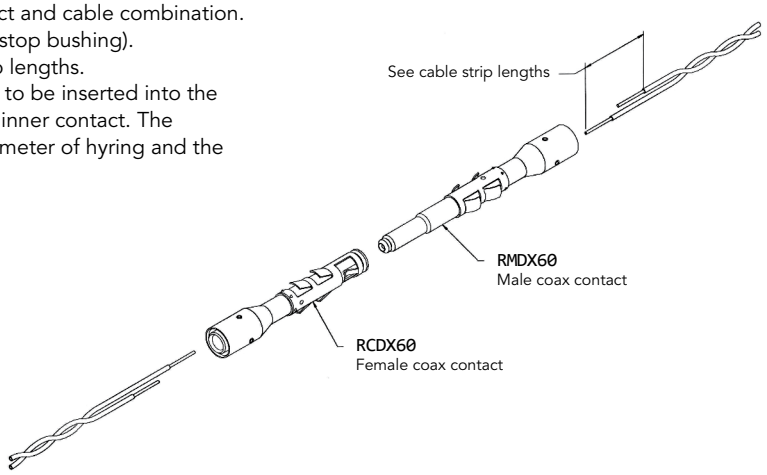

Cable strip length

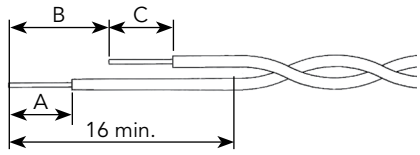

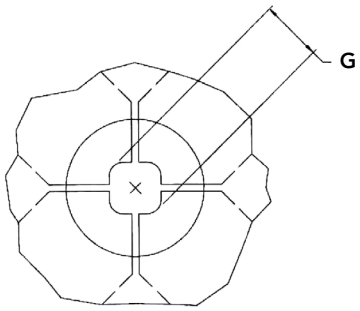

Braid crimp (G) to be measured with die set fully closed

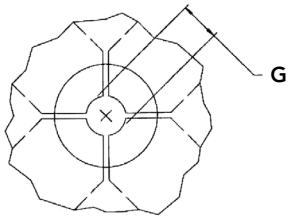

Inner conductor crimp (G) to be measured with die set fully closed

Note : all dimensions are in mm

#16 Coaxial Contacts (Continued)

Multipiece Male Contact with Coax Cable

Cable reference	Contact	Hyring complementary compoments	Outer contact crimp tool		Inner contact crimp tool		Cable strip length		
			Crimp tool M10S1J		Crimp tool M10S1J				
			Die set	Stop bushing	Die set	Stop bushing	A	B	C
RG161U	Male: RMDXK10D28	YOC074	S221	SL471	S23D2	SL46D2	4.37	7.95	15.88
RG179							4.37	7.95	15.88
RG187U							4.37	7.95	15.88
RG188/U					S26D2		4.37	7.95	15.88
RG174/U							4.37	7.95	15.88
RG178A/U		YOC074 + RMDXB0553			S23D2		7.54	9.12	17.53
RG196U							7.54	9.12	17.53
AMPHENOL 21-598		YOC074			-		4.37	7.95	15.88
surprenant pn 8134					-		4.37	7.95	15.88

Multipiece kit details

RMDXK10D28 includes	RMDX602D28	Outer contact
	RFD26L1D28	Inner contact
	YOC074	Outer hyring
	RMDXB0553	Inner supporting sleeve

Cable strip length

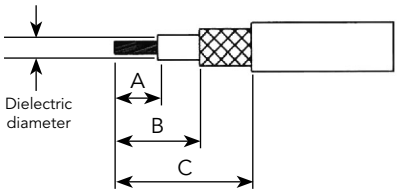

Contact assembly with dielectric diameter over 1.4mm - without inner supporting sleeve

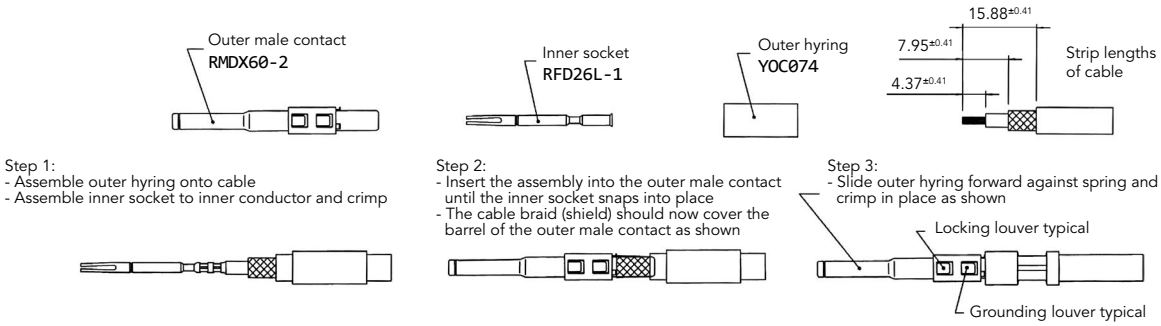

Contact assembly with dielectric diameter under 1.4mm - with inner supporting sleeve

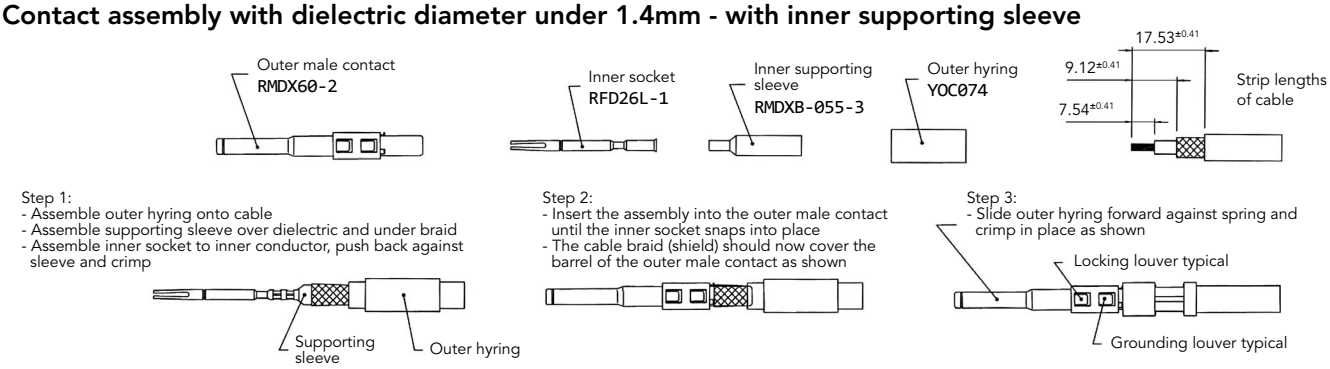

Note : all dimensions are in mm

Multipiece Female Contact with Coax Cable

Cable reference	Contact	Hyring complementary compoments	Outer contact crimp tool		Inner contact crimp tool		Cable strip length		
			Crimp tool M10S1J		Crimp tool M10S1J				
			Die set	Stop bushing	Die set	Stop bushing	A	B	C
RG161U	Female: RCDXK1D28	YOC074	S221	SL471	S23D2	SL46D2	4.37	-	11.13
RG179							4.37		11.13
RG187U							4.37		11.13
RG188/U					S26D2		4.37		11.13
RG174/U							4.37		11.13
RG178A/U		YOC074 + RMDXB0553			S23D2		6.35		11.13
RG196U							6.35		11.13
AMPHENOL 21-598		YOC074			-		4.37		11.13
surprenant pn 8134					-		4.37		11.13

Multipiece kit details

RCDXK1D28 includes	RCDX602D28	Outer contact
	RMD26L1D28	Inner contact
	YOC074	Outer hyring
	RCDXB0553	Inner supporting sleeve

Cable strip length

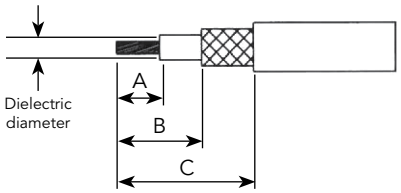

Contact assembly with dielectric diameter over 1.4mm - without inner supporting sleeve

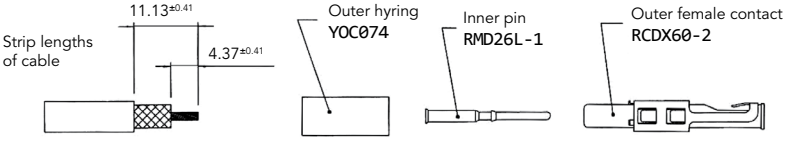

Step 1:
- Assemble outer hyring onto cable
- Assemble inner pin to inner conductor and crimp

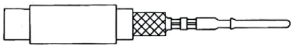

Step 2:
- Insert the assembly into the outer female contact until the inner pin snaps into place
- The cable braid (shield) should now cover the barrel of the outer female contact as shown

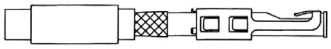

Step 3:
- Slide outer hyring forward against spring and crimp in place as shown

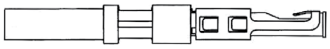

Contact assembly with dielectric diameter under 1.4mm - with inner supporting sleeve

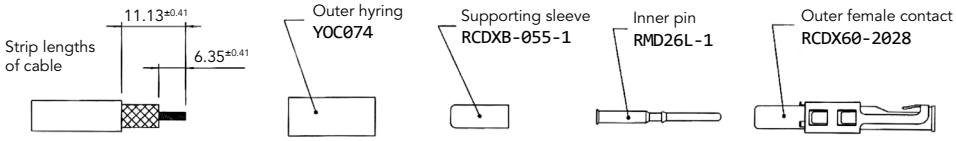

Step 1:
- Assemble outer hyring onto cable
- Assemble supporting sleeve over dielectric and under braid
- Assemble inner pin to inner conductor, push back against sleeve and crimp

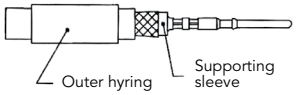

Step 2:
- Insert the assembly into the outer female contact until the inner pin snaps into place
- The cable braid (shield) should now cover the barrel of the outer female contact as shown

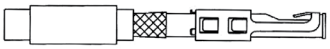

Step 3:
- Slide outer hyring forward against spring and crimp in place as shown

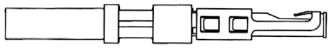

Note : all dimensions are in mm

#16 Coaxial Contacts (Continued)

Coax Cable with Monocrimp Contact Cabling

Cable reference	Male contact	Female contact	Crimp tool	Die set	Stop bushing	Cable strip length			Inner conductor crimp		Braid crimp	
						A	B	C	g dim	t dim	g dim	t dim
CDC PIN22939200	RMDX6046D28	RCDX6016D28	M10S1J	S80	SL105	4.19	5.97	8.51	1.30/1.17	1.40/1.22	2.77/2.64	3.02/2.84
CDC PIN22939200	RMDX6046D28	RCDX6016D28		S87	SL105	5.08	6.35	8.89	1.30/1.17	1.40/1.22	2.77/2.64	3.02/2.84
CDC PIN245670000	RMDX6050D28	RCDX6016D28		S80	SL105	5.08	6.35	8.89	1.30/1.17	1.40/1.22	2.97/2.84	3.12/2.95
KX21TVT (europe) RG178 B/U	RMDX6034D28	RCDX6034D28		S82	SL105	5.08	6.35	8.89	1.30/1.17	1.32/1.17	2.84/2.74	3.07/2.9
RG178 / BU	RMDX6050D28	RCDX6016D28		S87	SL105	5.08	6.35	8.89	1.30/1.17	1.40/1.22	2.77/2.64	3.02/2.84
ampex	RMDX6032D28	RCDX6032D28		S80	SL105	5.08	6.35	11.68	1.30/1.17	1.40/1.22	2.97/2.84	3.12/2.95
TI PN 920580	RMDX6024D28	RCDX6024D28		S82	SL105	5.08	6.35	8.89	1.35/1.19	1.42/1.27	2.87/2.74	3.07/2.9
RG174/U	RMDX6032D28	RCDX6032D28		S80	SL105	5.08	6.35	11.68	1.30/1.17	1.40/1.22	2.97/2.84	3.12/2.95
Honeywell PN 58000062	RMDX6026D28	RCDX6026D28		S82	SL105	5.08	6.35	8.89	1.35/1.19	1.42/1.27	2.87/2.74	3.07/2.9
RG188A/U	RMDX6036D28	RCDX6036D28		S80	SL105	5.08	6.35	11.68	1.30/1.17	1.40/1.22	2.97/2.84	3.12/2.95
RG316/U	RMDX6036D28	RCDX6036D28		S80	SL105	5.08	6.35	11.68	1.30/1.17	1.40/1.22	2.97/2.84	3.12/2.95
PRD PN 247AS-C1123-001	RMDX6018D28	RCDX6018D28		M10SG8 ASSY'Y TOOL DIE SET STOP BUSHING M10S1J TOOL		5.08	6.35	8.89	1.22/1.17	1.35/1.22	2.92/2.79	3.12/2.97
PRD PN 247AS-C1251	RMDX6018D28	RCDX6018D28				5.08	6.35	8.89	1.22/1.17	1.35/1.22	2.92/2.79	3.12/2.97
raychem 5024A3111	RMDX6052D28	RCDX6052D28		S88	SL105	5.08	6.35	11.68	1.37/1.27	1.45/1.32	2.92/2.79	
raychem 5026e1614	RMDX6036D28	RCDX6036D28		M10SG8 ASSY'Y TOOL DIE SET STOP BUSHING M10S1J TOOL		5.08	6.35	8.89	1.22/1.17	1.35/1.22	2.92/2.79	3.12/2.97
JUDD C15013010902	RMDX6036D28	RCDX6036D28				5.08	6.35	8.89	1.22/1.17	1.35/1.22	2.92/2.79	3.12/2.97
inner cond. #30, braid diam 2.64	RMDX6050D28	-		S80	SL105	5.1	6.35	8.9	-	-	-	-
inner cond. #30, braid diam 2.29	RMDX6050D28	-		S87	SL105	4.2	6.35	8.5	-	-	-	-
inner cond. #28, braid diam 2.9	RMDX6032D28	RCDX6032D28		S80	SL105	5.1	6.35	11.7	-	-	-	-
inner cond. #26, braid diam 1.78	RMDX6024D28	RCDX6024D28		S82	SL105	5.1	6.35	8.9	-	-	-	-
inner cond. #26, braid diam 3.05	RMDX6026D28	RCDX6026D28		S82	SL105	5.1	6.35	8.9	-	-	-	-

- Select appropriate cable and contact combination.
- Select appropriate crimp tooling (hand tool, S-die set, stop bushing).
- Strip coax cable to the designated wire strip lengths.
- Insert the stripped coax into the rear of the contact.
- Crimp the contact.

Cable strip length

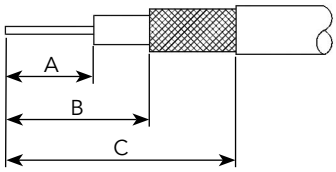

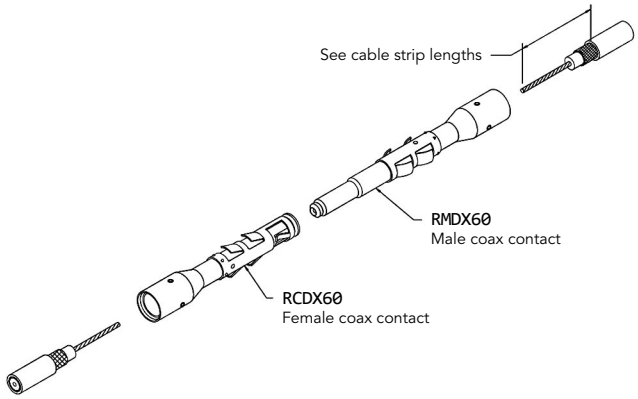

Note : all dimensions are in mm

Glossary of Terms

• Clearance
Per the IEC 60664-1 it is the shortest distance between two conductive parts even over the air.

• Creepage distance
Per the IEC 60664-1 it represents the shortest distance along the surface of the insulating material between two conductive parts.

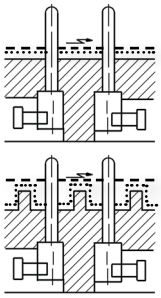

Air gap
Creepage distance

• Working voltage
Per the IEC 60664-1 it is the highest r.m.s. value of A.C. or D.C. voltage across any particular insulation which can occur when the equipment is supplied at rated voltage.

• Rated impulse voltage
Impulse withstands voltage value assigned by the manufacturer to the equipment or to a part of it characterizing the specified withstand capability of its insulation against transient overvoltage.

• Working current
It is the maximum continuous and not interrupted current able to be carried by all contacts without exceeding the maximum temperature of the insulating material.

• Transient voltage
Extract from the IEC 60664-1: Short duration overvoltage of a few millisecond or less, oscillatory or non-oscillatory, usually highly damped.

• CTI (Comparative Tracking Index)
The CTI value is commonly used to characterise the electrical breakdown properties of an insulating material. It allows users to know the tendency to create creepage paths. This value represents the maximum voltage after 50 drops of ammonium chloride solution without any breakdown.

• RTI (Relative temperature Index):
Extract from ULs website:
Maximum service temperature for a material, where a class of critical property will not be unacceptably compromised through chemical thermal degradation, over the reasonable life of an electrical product, relative to a reference material having a confirmed, acceptable corresponding performance defined RTI.

- **RTI Elec**: Electrical RTI, associated with critical electrical insulating properties.

- **RTI Mech Imp**: Mechanical Impact RTI, associated with critical impact resistance, resilience and flexibility properties.

- **RTI Mech Str:** Mechanical Strength (Mechanical without Impact) RTI, associated with critical mechanical strength where impact resistance, resilience and flexibility are not essential.

Discrimination/Keying Methods

In applications where similar connectors are used next to each other, mismatching can cause disturbances, system failure or even danger to operating personnel.

To eliminate mismatching, some Trim Trio® connectors are offered with discrimination keys to avoid interconnection system errors. In addition, the connector insert can also be rotated inside the shell to create custom keying options.

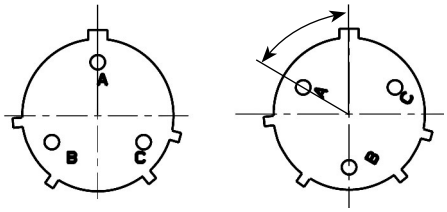

N (Normal) Other keys

Note: Insert rotated in body
(viewed from front face of male insert)

Connectors with rotated inserts can be ordered by adding the suffix W, X, Y or Z to the standard part number.

e.g. **`UTS6JC104S`** (N key) ➔ **`UTS6JC104SW`** (W key)

Consult us for overmoulded harnesses.

Shell size	Layout	Discrimination keys degrees			
		W	X	Y	Z
8	8E2/8D2	58°	122°	-	-
	8E3/8D3 8E3A/ 8D3A 8E98/8D98	60°	210°	-	-
	8E4/8D4	45°	-	-	-
	8E33/8D33	90°	-	-	-
10	102W2/103	-	-	-	-
	104	45°	-	-	-
	103W3	-	-	-	-
	106 10E6/10D6	90°	-	-	-
	10E7/10D7	90°		-	-
	10E98/ 10D98	90°	180°	240°	270°
12	12E2/12D2	-	-	-	-
	12E3/12D3	-	-	180°	-
	124 12E4/12D4	-	-	-	-
	128	26°	-	-	-
	12E8/12D8	90°	112°	203°	292°
	1210 12E10/12D10	60°	155°	270°	295°
	12E14/12D14	45°	-	-	-
14	14E5/14D5	40°	92°	184°	273°
	142G1	-	-	-	-
	147 14E7/14D7	-	-	-	-
	148	-	-	-	-
	1412	60°	-	-	-
	1492	49°	71°	145°	-
	14E12/14D12	43°	90°	-	-
	14E15/14D15	17°	110°	155°	234°
	14E18/14D18	15°	90°	180°	270°
	1419	30°	165°	315°	-
	14E19/14D19	30°	165°	315°	-
18	183G1	-	-	-	-
	18X2M3	-	-	-	-
	1823	-	158°	-	270°
	1832 18E32/18D32	85°	138°	222°	265°

SMSPKE0 (only for UTS layouts using #16 contacts)

When one of these dummy contacts is used, the UTS connector will only mate with a connector which has a vacant cavity at the corresponding position.

The material used is polyamide 6.6.

Part Number Index

Connectors

UTS0104P..... P. 68
UTS0104S..... P. 68
UTS010D6P..... P. 84
UTS010D6S..... P. 84
UTS710D6P..... P. 84
UTS710D6P32..... P. 84
UTS710D6S..... P. 84
UTS710D6S32..... P. 84
UTS010D98P..... P. 88
UTS010D98S..... P. 88
UTS010E6P..... P. 84
UTS010E6S..... P. 84
UTS010E7P..... P. 96
UTS010E7S..... P. 96
UTS010E98P..... P. 88
UTS010E98S..... P. 88
UTS0124P..... P. 52
UTS0128P..... P. 100
UTS0128S..... P. 100
UTS012D10P..... P. 112
UTS012D10S..... P. 112
UTS012D14P..... P. 128
UTS012D14S..... P. 128
UTS012D2P..... P. 24
UTS012D2S..... P. 24
UTS012D3P..... P. 48
UTS012D3S..... P. 48
UTS012D4P..... P. 52
UTS012D4S..... P. 52
UTS012D8P..... P. 104
UTS012D8S..... P. 104
UTS012E10P..... P. 112
UTS012E10S..... P. 112
UTS012E14P..... P. 128
UTS012E14S..... P. 128
UTS012E2P..... P. 24
UTS012E2S..... P. 24
UTS012E3P..... P. 48
UTS012E3S..... P. 48
UTS012E4P..... P. 52
UTS012E4S..... P. 52
UTS012E8P..... P. 104
UTS012E8S..... P. 104
UTS01412P..... P. 116
UTS01412S..... P. 116
UTS0142G1P..... P. 32
UTS0147P..... P. 92
UTS0147S..... P. 92
UTS01492P..... P. 124
UTS01492S..... P. 124
UTS014D7P..... P. 92
UTS014D7S..... P. 92
UTS014D12P..... P. 120
UTS014D12S..... P. 120
UTS014D15P..... P. 132
UTS014D15S..... P. 132
UTS014D18P..... P. 136
UTS014D18S..... P. 136
UTS014D19P..... P. 140
UTS014D19S..... P. 140
UTS014D5P..... P. 72
UTS014D5S..... P. 72
UTS014E12P..... P. 120
UTS014E12S..... P. 120
UTS014E15P..... P. 132
UTS014E15S..... P. 132
UTS014E18P..... P. 136
UTS014E18S..... P. 136
UTS014E19P..... P. 140
UTS014E19S..... P. 140
UTS014E5P..... P. 72
UTS014E5S..... P. 72
UTS014E7P..... P. 92
UTS014E7S..... P. 92
UTS01823P..... P. 144
UTS01823S..... P. 144
UTS018E32P..... P. 148
UTS08D2P..... P. 20
UTS08D2S..... P. 20
UTS08D33P..... P. 44
UTS08D33S..... P. 44
UTS08D3AP..... P. 40
UTS08D3AS..... P. 40
UTS08D3P..... P. 36
UTS08D3S..... P. 36
UTS08D4P..... P. 60
UTS08D4S..... P. 60
UTS08D98P..... P. 40
UTS08D98S..... P. 40
UTS08E2P..... P. 20
UTS08E2S..... P. 20
UTS08E33P..... P. 44
UTS08E33S..... P. 44
UTS08E3AP..... P. 40
UTS08E3AS..... P. 40
UTS08E3P..... P. 36
UTS08E3S..... P. 36
UTS08E4P..... P. 60
UTS08E4S..... P. 60
UTS08E98P..... P. 40
UTS08E98S..... P. 40
UTS1GJC104P..... P. 68
UTS1GJC128P..... P. 100
UTS1GJC1412P..... P. 116
UTS1GJC147P..... P. 92
UTS1GJC1492P..... P. 124
UTS1GN104P..... P. 68
UTS1GN128P..... P. 100
UTS1GN1412P..... P. 116
UTS1GN147P..... P. 92
UTS1GN1492P..... P. 124
UTS1JC102W2P..... P. 64
UTS1JC102W2S..... P. 64
UTS1JC103P..... P. 28
UTS1JC103S..... P. 28
UTS1JC103W3P..... P. 80
UTS1JC103W3S..... P. 80
UTS1JC104P..... P. 68
UTS1JC104S..... P. 68
UTS1JC106P..... P. 84
UTS1JC106S..... P. 84
UTS1JC1210P..... P. 112
UTS1JC1210S..... P. 112
UTS1JC124P..... P. 52
UTS1JC124PSCR..... P. 52
UTS1JC124S..... P. 52
UTS1JC128P..... P. 100
UTS1JC128S..... P. 100
UTS1JC1412P..... P. 116
UTS1JC1412S..... P. 116
UTS1JC1419P..... P. 140
UTS1JC1419S..... P. 140
UTS1JC142G1P..... P. 32
UTS1JC142G1S..... P. 32
UTS1JC147P..... P. 92
UTS1JC1492P..... P. 124
UTS1JC1492S..... P. 124
UTS1JC147PSCR..... P. 92
UTS1JC147S..... P. 92
UTS1JC148P..... P. 108
UTS1JC148S..... P. 108
UTS1JC1823P..... P. 144
UTS1JC1823S..... P. 144
UTS1JC1832P..... P. 148
UTS1JC1832S..... P. 148
UTS1JC18LCN..... P. 152
UTS1JC18MPN..... P. 156
UTS6102W2P..... P. 64
UTS6102W2S..... P. 64
UTS6103P..... P. 28
UTS6103S..... P. 28
UTS6103W3P..... P. 80
UTS6103W3S..... P. 80
UTS6104P..... P. 68
UTS6104S..... P. 68
UTS6106P..... P. 84
UTS6106S..... P. 84
UTS610E6P..... P. 84

Part Number Index (Continued)

UTS610E6S..... P. 84
UTS610E7P ..... P. 96
UTS610E7S ..... P. 96
UTS610E98P..... P. 88
UTS610E98S..... P. 88
UTS61210P..... P. 112
UTS61210S..... P. 112
UTS6124P..... P. 52
UTS6124PSCR..... P. 52
UTS6124SSCR..... P. 52
UTS6128P..... P. 100
UTS6128S..... P. 100
UTS612E10P..... P. 112
UTS612E10S..... P. 112
UTS612E14P..... P. 128
UTS612E14S..... P. 128
UTS612E2P..... P. 24
UTS612E2S..... P. 24
UTS612E3P..... P. 48
UTS612E3S..... P. 48
UTS612E4P..... P. 52
UTS612E4S..... P. 52
UTS612E8P..... P. 104
UTS612E8S..... P. 104
UTS61412P..... P. 116
UTS61412S..... P. 116
UTS61419P..... P. 140
UTS61419S..... P. 140
UTS6142G1P..... P. 32
UTS6142G1S..... P. 32
UTS6147P..... P. 92
UTS6147S..... P. 92
UTS6148P..... P. 108
UTS6148S..... P. 108
UTS61492P..... P. 124
UTS61492S..... P. 124
UTS614E12P..... P. 120
UTS614E12S..... P. 120
UTS614E15P..... P. 132
UTS614E15S..... P. 132
UTS614E18P..... P. 136
UTS614E18S..... P. 136
UTS614E19P..... P. 140
UTS614E19S..... P. 140
UTS614E5P..... P. 72
UTS614E5S..... P. 72
UTS61823P..... P. 144
UTS61823S..... P. 144
UTS61832P..... P. 148
UTS61832S..... P. 148
UTS6183G1P..... P. 56
UTS618X2M3P..... P. 76
UTS618X2M3S..... P. 76
UTS68E2P..... P. 20
UTS68E2S..... P. 20
UTS68E33P..... P. 44
UTS68E33S..... P. 44
UTS68E3AP..... P. 40
UTS68E3AS..... P. 40
UTS68E3P..... P. 36
UTS68E3S..... P. 36
UTS68E4P..... P. 60
UTS68E4S..... P. 60
UTS68E98P..... P. 40
UTS68E98S..... P. 40
UTS6GJC104S..... P. 68
UTS6GJC128S..... P. 100
UTS6GJC1412S..... P. 116
UTS6GJC147S..... P. 92
UTS6GJC1492S..... P. 124
UTS6GN104S..... P. 68
UTS6GN128S..... P. 100
UTS6GN1412S..... P. 116
UTS6GN147S..... P. 92
UTS6GN1492S..... P. 124
UTS6JC102W2P..... P. 64
UTS6JC102W2S..... P. 64
UTS6JC103P..... P. 28
UTS6JC103S..... P. 28
UTS6JC103W3P..... P. 80
UTS6JC103W3S..... P. 80
UTS6JC104P..... P. 68
UTS6JC104S..... P. 68
UTS6JC106P..... P. 84
UTS6JC106S..... P. 84
UTS6JC10E6P..... P. 84
UTS6JC10E6S..... P. 84
UTS6JC10E7P..... P. 96
UTS6JC10E7S..... P. 96
UTS6JC10E98P..... P. 88
UTS6JC10E98S..... P. 88
UTS6JC1210P..... P. 112
UTS6JC1210S..... P. 112
UTS6JC124P..... P. 52
UTS6JC124PSCR..... P. 52
UTS6JC124S..... P. 52
UTS6JC124SSCR..... P. 52
UTS6JC128P..... P. 100
UTS6JC128S..... P. 100
UTS6JC12E10P..... P. 112
UTS6JC12E10S..... P. 112
UTS6JC12E14P..... P. 128
UTS6JC12E14S..... P. 128
UTS6JC12E2P..... P. 24
UTS6JC12E2S..... P. 24
UTS6JC12E3P..... P. 48
UTS6JC12E3S..... P. 48
UTS6JC12E4P..... P. 52
UTS6JC12E4S..... P. 52
UTS6JC12E8P..... P. 104
UTS6JC12E8S..... P. 104
UTS6JC1412P..... P. 116
UTS6JC1412S..... P. 116
UTS6JC1419P..... P. 140
UTS6JC1419S..... P. 140
UTS6JC142G1P..... P. 32
UTS6JC142G1S..... P. 32
UTS6JC147P..... P. 92
UTS6JC147PSCR..... P. 92
UTS6JC147S..... P. 92
UTS6JC147SSCR..... P. 92
UTS6JC1492P..... P. 124
UTS6JC1492S..... P. 124
UTS6JC148P..... P. 108
UTS6JC148S..... P. 108
UTS6JC14E12P..... P. 120
UTS6JC14E12S..... P. 120
UTS6JC14E15P..... P. 132
UTS6JC14E15S..... P. 132
UTS6JC14E18P..... P. 136
UTS6JC14E18S..... P. 136
UTS6JC14E19P..... P. 140
UTS6JC14E19S..... P. 140
UTS6JC14E5P..... P. 72
UTS6JC14E5S..... P. 72
UTS6JC14E7P..... P. 92
UTS6JC14E7S..... P. 92
UTS6JC1823P..... P. 144
UTS6JC1823S..... P. 144
UTS6JC1832P..... P. 148
UTS6JC1832S..... P. 148
UTS6JC183G1P..... P. 56
UTS6JC18LCN..... P. 152
UTS6JC18MPN..... P. 156
UTS6JC18X2M3P..... P. 76
UTS6JC18X2M3S..... P. 76
UTS6JC8E2P..... P. 20
UTS6JC8E2S..... P. 20
UTS6JC8E33P..... P. 44
UTS6JC8E33S..... P. 44
UTS6JC8E3AP..... P. 40
UTS6JC8E3AS..... P. 40
UTS6JC8E3P..... P. 36
UTS6JC8E3S..... P. 36
UTS6JC8E4P..... P. 60
UTS6JC8E4S..... P. 60
UTS6JC8E98P..... P. 40
UTS6JC8E98S..... P. 40
UTS7102W2P..... P. 64

UTS7102W2S..... P. 64
UTS7103P..... P. 28
UTS7103S ..... P. 28
UTS7103W3P..... P. 80
UTS7103W3S..... P. 80
UTS7104P..... P. 68
UTS7104S..... P. 68
UTS7106P..... P. 84
UTS7106S..... P. 84
UTS710D98P..... P. 88
UTS710D98P32..... P. 88
UTS710D98S..... P. 88
UTS710D98S32..... P. 88
UTS710E6P..... P. 84
UTS710E6S..... P. 84
UTS710E6PM16..... P. 84
UTS710E6SM16..... P. 84
UTS710E7P..... P. 96
UTS710E7S..... P. 96
UTS710E7PM16..... P. 96
UTS710E7SM16..... P. 96
UTS710E98P..... P. 88
UTS710E98S..... P. 88
UTS71210P..... P. 112
UTS71210S..... P. 112
UTS7124P..... P. 52
UTS7124PSCR..... P. 52
UTS7124S..... P. 52
UTS7124SSCR..... P. 52
UTS7128P..... P. 100
UTS7128PM20..... P. 100
UTS7128PM20NUT..... P. 100
UTS7128PSEK9..... P. 100
UTS7128S..... P. 100
UTS7128SM20..... P. 100
UTS7128SM20NUT..... P. 100
UTS712D10P..... P. 112
UTS712D10P32..... P. 112
UTS712D10S..... P. 112
UTS712D10S32..... P. 112
UTS712D14P..... P. 128
UTS712D14P32..... P. 128
UTS712D14S..... P. 128
UTS712D14S32..... P. 128
UTS712D2P..... P. 24
UTS712D2P32..... P. 24
UTS712D2S..... P. 24
UTS712D2S32..... P. 24
UTS712D3P..... P. 48
UTS712D3P32..... P. 48
UTS712D3S..... P. 48
UTS712D3S32..... P. 48
UTS712D4P..... P. 52
UTS712D4P32..... P. 52
UTS712D4S..... P. 52
UTS712D4S32..... P. 52
UTS712D8P..... P. 104
UTS712D8P32..... P. 104
UTS712D8S..... P. 104
UTS712D8S32..... P. 104
UTS712E10P..... P. 112
UTS712E10S..... P. 112
UTS712E14P..... P. 128
UTS712E14S..... P. 128
UTS712E2P..... P. 24
UTS712E2S..... P. 24
UTS712E3P..... P. 48
UTS712E3S..... P. 48
UTS712E4P..... P. 52
UTS712E4S..... P. 52
UTS712E8P..... P. 104
UTS712E8S..... P. 104
UTS71412P..... P. 116
UTS71412S..... P. 116
UTS71419P..... P. 140
UTS71419S..... P. 140
UTS7142G1P..... P. 32
UTS7142G1S..... P. 32
UTS7142G1SNPT..... P. 32
UTS7147P..... P. 92
UTS7147PSCR..... P. 92
UTS7147PSEK9..... P. 92
UTS7147S..... P. 92
UTS71492P..... P. 124
UTS71492S..... P. 124
UTS7148P..... P. 108
UTS7148S..... P. 108
UTS7147SSCR..... P. 92
UTS714D7P..... P. 92
UTS714D7P32..... P. 92
UTS714D7S..... P. 92
UTS714D7S32..... P. 92
UTS714D12P..... P. 120
UTS714D12P32..... P. 120
UTS714D12S..... P. 120
UTS714D12S32..... P. 120
UTS714D15P..... P. 132
UTS714D15P32..... P. 132
UTS714D15S..... P. 132
UTS714D15S32..... P. 132
UTS714D18P..... P. 136
UTS714D18P32..... P. 136
UTS714D18S..... P. 136
UTS714D18S32..... P. 136
UTS714D19P..... P. 140
UTS714D19P32..... P. 140
UTS714D19S..... P. 140
UTS714D19S32..... P. 140
UTS714D5P..... P. 72
UTS714D5P32..... P. 72
UTS714D5S..... P. 72
UTS714D5S32..... P. 72
UTS714E12P..... P. 120
UTS714E12S..... P. 120
UTS714E15P..... P. 132
UTS714E15S..... P. 125
UTS714E18P..... P. 136
UTS714E18S..... P. 136
UTS714E19P..... P. 140
UTS714E19S..... P. 140
UTS714E5P..... P. 72
UTS714E5S..... P. 72
UTS714E7P..... P. 92
UTS714E7S..... P. 92
UTS71823P..... P. 144
UTS71823S..... P. 144
UTS71832P..... P. 148
UTS71832S..... P. 148
UTS7183G1SNPT..... P. 56
UTS718LCN..... P. 152
UTS718MPN..... P. 156
UTS718X2M3PNPT..... P. 76
UTS718X2M3SNPT..... P. 76
UTS78D2P..... P. 20
UTS78D2P32..... P. 20
UTS78D2S..... P. 20
UTS78D2S32..... P. 20
UTS78D33P..... P. 44
UTS78D33P32..... P. 44
UTS78D33S..... P. 44
UTS78D33S32..... P. 44
UTS78D3AP..... P. 40
UTS78D3AP32..... P. 40
UTS78D3AS..... P. 40
UTS78D3AS32..... P. 40
UTS78D3P..... P. 36
UTS78D3P32..... P. 36
UTS78D3S..... P. 36
UTS78D3S32..... P. 36
UTS78D4P..... P. 60
UTS78D4P32..... P. 60
UTS78D4S..... P. 60
UTS78D4S32..... P. 60
UTS78D98P..... P. 40
UTS78D98P32..... P. 40
UTS78D98S..... P. 40
UTS78D98S32..... P. 40
UTS78E2P..... P. 20
UTS78E2S..... P. 20

Part Number Index (Continued)

UTS78E33P..... P. 44
UTS78E33S..... P. 44
UTS78E3AP..... P. 40
UTS78E3AS..... P. 40
UTS78E3P..... P. 36
UTS78E3S..... P. 36
UTS78E4P ..... P. 60
UTS78E4S..... P. 60
UTS78E98P..... P. 40
UTS78E98S..... P. 40
UTS7GJC104P..... P. 68
UTS7GJC128P..... P. 100
UTS7GJC1412P..... P. 116
UTS7GJC147P..... P. 92
UTS7GJC1492P..... P. 124
UTS7GN104P..... P. 68
UTS7GN128P..... P. 100
UTS7GN1412P..... P. 116
UTS7GN147P..... P. 92
UTS7GN1492P..... P. 124

Overmoulded Cable Assemblies

HAUTS0V102W2PRA100..... P. 64
HAUTS0V102W2PST100..... P. 64
HAUTS0V102W2SRA100..... P. 64
HAUTS0V102W2SST100..... P. 64
HAUTS0V103PRA100..... P. 28
HAUTS0V103PST100..... P. 28
HAUTS0V103SRA100..... P. 28
HAUTS0V103SST100..... P. 28
HAUTS0V103W3PRA100..... P. 80
HAUTS0V103W3PST100..... P. 80
HAUTS0V103W3SRA100..... P. 80
HAUTS0V103W3SST100..... P. 80
HAUTS0V104PRA100..... P. 68
HAUTS0V104PST100..... P. 68
HAUTS0V104SRA100..... P. 68
HAUTS0V104SST100..... P. 68
HAUTS0V106PRA100..... P. 84
HAUTS0V106PST100..... P. 84
HAUTS0V106SRA100..... P. 84
HAUTS0V106SST100..... P. 84
HAUTS0V10E6PRA100..... P. 84
HAUTS0V10E6PST100..... P. 84
HAUTS0V10E6SRA100..... P. 84
HAUTS0V10E6SST100..... P. 84
HAUTS0V10E7PRA100..... P. 96
HAUTS0V10E7PST100..... P. 96
HAUTS0V10E7SRA100..... P. 96
HAUTS0V10E7SST100..... P. 96
HAUTS0V10E98PRA100..... P. 88
HAUTS0V10E98PST100..... P. 88
HAUTS0V10E98SRA100..... P. 88
HAUTS0V10E98SST100..... P. 88
HAUTS0V1210PRA100..... P. 112
HAUTS0V1210PST100..... P. 112
HAUTS0V1210SRA100..... P. 112
HAUTS0V1210SST100..... P. 112
HAUTS0V124PRA100..... P. 52
HAUTS0V124PST100..... P. 52
HAUTS0V124SRA100..... P. 52
HAUTS0V124SST100..... P. 52
HAUTS0V128PRA100..... P. 100
HAUTS0V128PST100..... P. 100
HAUTS0V128SRA100..... P. 100
HAUTS0V128SST100..... P. 100
HAUTS0V12E10PRA100..... P. 112
HAUTS0V12E10PST100..... P. 112
HAUTS0V12E10SRA100..... P. 112
HAUTS0V12E10SST100..... P. 112
HAUTS0V12E14PRA100..... P. 128
HAUTS0V12E14PST100..... P. 128
HAUTS0V12E14SRA100..... P. 128
HAUTS0V12E14SST100..... P. 128
HAUTS0V12E2PRA100..... P. 24
HAUTS0V12E2PST100..... P. 24
HAUTS0V12E2SRA100..... P. 24
HAUTS0V12E2SST100..... P. 24
HAUTS0V12E3PRA100..... P. 48
HAUTS0V12E3PST100..... P. 48
HAUTS0V12E3SRA100..... P. 48
HAUTS0V12E3SST100..... P. 48
HAUTS0V12E4PRA100..... P. 52
HAUTS0V12E4PST100..... P. 52
HAUTS0V12E4SRA100..... P. 52
HAUTS0V12E4SST100..... P. 52
HAUTS0V12E8PRA100..... P. 104
HAUTS0V12E8PST100..... P. 104
HAUTS0V12E8SRA100..... P. 104
HAUTS0V12E8SST100..... P. 104
HAUTS0V1412PRA100..... P. 116
HAUTS0V1412PST100..... P. 116
HAUTS0V1412SRA100..... P. 116
HAUTS0V1412SST100..... P. 116
HAUTS0V1419PRA100..... P. 140
HAUTS0V1419PST100..... P. 140
HAUTS0V1419SRA100..... P. 140
HAUTS0V1419SST100..... P. 140
HAUTS0V147PRA100..... P. 92
HAUTS0V147PST100..... P. 92
HAUTS0V147SRA100..... P. 92
HAUTS0V147SST100..... P. 92
HAUTS0V14E12PRA100..... P. 120
HAUTS0V14E12PST100..... P. 120
HAUTS0V14E12SRA100..... P. 120
HAUTS0V14E12SST100..... P. 120
HAUTS0V14E15PRA100..... P. 132
HAUTS0V14E15PST100..... P. 132
HAUTS0V14E15SRA100..... P. 132
HAUTS0V14E15SST100..... P. 132
HAUTS0V14E18PRA100..... P. 136
HAUTS0V14E18PST100..... P. 136
HAUTS0V14E18SRA100..... P. 136
HAUTS0V14E18SST100..... P. 136
HAUTS0V14E19PRA100..... P. 140
HAUTS0V14E19PST100..... P. 140
HAUTS0V14E19SRA100..... P. 140
HAUTS0V14E19SST100..... P. 140
HAUTS0V14E5PRA100..... P. 72
HAUTS0V14E5PST100..... P. 72
HAUTS0V14E5SRA100..... P. 72
HAUTS0V14E5SST100..... P. 72
HAUTS0V14E7PRA100..... P. 92
HAUTS0V14E7PST100..... P. 92
HAUTS0V14E7SRA100..... P. 92
HAUTS0V14E7SST100..... P. 92
HAUTS0V1823PRA100..... P. 144
HAUTS0V1823PST100..... P. 144
HAUTS0V1823SRA100..... P. 144
HAUTS0V1823SST100..... P. 144
HAUTS0V1832PRA100..... P. 148
HAUTS0V1832PST100..... P. 148
HAUTS0V1832SRA100..... P. 148
HAUTS0V1832SST100..... P. 148
HAUTS0V8E2PRA100..... P. 20
HAUTS0V8E2PST100..... P. 20
HAUTS0V8E2SRA100..... P. 20
HAUTS0V8E2SST100..... P. 20
HAUTS0V8E33APRA100..... P. 44
HAUTS0V8E33APST100..... P. 44
HAUTS0V8E33ASRA100..... P. 44
HAUTS0V8E33ASST100..... P. 44
HAUTS0V8E3APRA100..... P. 40
HAUTS0V8E3APST100..... P. 40
HAUTS0V8E3ASRA100..... P. 40
HAUTS0V8E3ASST100..... P. 40
HAUTS0V8E3PRA100..... P. 36
HAUTS0V8E3PST100..... P. 36
HAUTS0V8E3SRA100..... P. 36
HAUTS0V8E3SST100..... P. 36
HAUTS0V8E4PRA100..... P. 60
HAUTS0V8E4PST100..... P. 60
HAUTS0V8E4SRA100..... P. 60
HAUTS0V8E4SST100..... P. 60

Accessories

85005585A..... P. 22
85005586A..... P. 30
85005587A..... P. 26
85005588A..... P. 34
85005590A..... P. 58
85005594..... P. 22
85005595..... P. 30
85005596..... P. 26
85005597..... P. 34
85005599..... P. 58
UTS18DCG2..... P. 154
UTS610CCRG..... P. 30
UTS610CCRR..... P. 30
UTS610CCRY..... P. 30
UTS612CCRG..... P. 26
UTS612CCRR..... P. 26
UTS612CCRY..... P. 26
UTS614CCRG..... P. 34
UTS614CCRR..... P. 34
UTS614CCRY..... P. 34
UTS618CCRG..... P. 58
UTS618CCRR..... P. 58
UTS618CCRY..... P. 58
UTS618DCG2..... P. 154
UTFD11B..... P. 22
UTFD12B..... P. 30
UTFD13B..... P. 26
UTFD14B..... P. 34
UTFD16B..... P. 58
UTS10DCG..... P. 30
UTS10DCGE..... P. 74
UTS10DCGR..... P. 30
UTS12DCG..... P. 26
UTS12DCGE..... P. 26
UTS12DCGR..... P. 26
UTS14DCG..... P. 34
UTS14DCGE..... P. 78
UTS14DCGR..... P. 34
UTS18DCG..... P. 58
UTS18DCGE..... P. 146
UTS18DCGR..... P. 58
UTS610DCG..... P. 30
UTS612DCG..... P. 26
UTS614DCG..... P. 34
UTS618DCG..... P. 58
UTS68C..... P. 22
UTS68CCRG..... P. 22
UTS68CCRR..... P. 22
UTS68CCRY..... P. 22
UTS710CCRG..... P. 30
UTS710CCRR..... P. 30
UTS710CCRY..... P. 30
UTS712CCRG..... P. 26
UTS712CCRR..... P. 26
UTS712CCRY..... P. 26
UTS714CCRG..... P. 34
UTS714CCRR..... P. 34
UTS714CCRY..... P. 34
UTS718CCRG..... P. 58
UTS718CCRR..... P. 58
UTS718CCRY..... P. 58
UTS78CCRG..... P. 22
UTS78CCRR..... P. 22
UTS78CCRY..... P. 22
UTS8DCGE..... P. 22
UTS8DCGR..... P. 22

Contacts

82911456A..... P. 165
82911456K..... P. 165
82911457NA..... P. 165
82911457NK..... P. 165
82911458A..... P. 165
82911458K..... P. 165
82911459NA..... P. 165
82911459NK..... P. 165
82911460A..... P. 165
82911460K..... P. 165
82911461NA..... P. 165
82911461NK..... P. 165
82911462A..... P. 165
82911462K..... P. 165
82911463NA..... P. 165
82911463NK..... P. 165
82911464A..... P. 165
82911464K..... P. 165
82911465NA..... P. 165
82911465NK..... P. 165
82911466A..... P. 165
82911466K..... P. 165
82911467NA..... P. 165
82911467NK..... P. 165
82911684NPC..... P. 168
82911685NPC..... P. 168
82913600A..... P. 165
82913601A..... P. 165
82913602A..... P. 165
82913603A..... P. 165
82913604A..... P. 165
82913605A..... P. 165
82913606A..... P. 165
82913607A..... P. 165
82913608A..... P. 165
82913609A..... P. 165
RC14M30GE7K..... P. 166
RC14M30K..... P. 165
RC16M23GE7K..... P. 166
RC16M23K..... P. 165
RC18W3K..... P. 165
RC20M12E8K..... P. 168
RC20M12E83K..... P. 168
RC20M12E84J..... P. 168
RC20M12E85K..... P. 168
RC20M12E86K..... P. 168
RC20M12E87K..... P. 168
RC20M12GE7K..... P. 166
RC20M12K..... P. 165
RC20M13GE7K..... P. 166
RC20M13K..... P. 165
RC20W3K..... P. 165
RC24M9GE7K..... P. 166
RC24M9K..... P. 165
RC24W3K..... P. 165
RC28M1GE7K..... P. 166
RC28M1K..... P. 165
RCDX6015D28..... P. 201
RCDX6016D28..... P. 200
RCDX6018D28..... P. 200
RCDX6019D28..... P. 201
RCDX6024D28..... P. 200
RCDX6026D28..... P. 200
RCDX602D28..... P. 205
RCDX6031D28..... P. 201
RCDX6032D28..... P. 200
RCDX6034D28..... P. 200
RCDX6036D28..... P. 200
RCDX6052D28..... P. 200
RCDXB0553..... P. 205
RCDXK1D28..... P. 200
RCPOF1000B..... P. 171
RCW5016K..... P. 168
RCW50A7K..... P. 168
RFD26L1D28..... P. 196
RM14M30GE1K..... P. 166
RM14M30K..... P. 165
RM16M23GE1K..... P. 166
RM16M23K..... P. 165
RM18W3K..... P. 165
M20M12E8K..... P. 168
RM20M12E83K..... P. 168
RM20M12E84K..... P. 168
RM20M12GE1K..... P. 166
RM20M12K..... P. 165
RM20M13GE1K..... P. 166
RM20M13K..... P. 165
RM20W3K..... P. 165
RM24M9GE1K..... P. 166
RM24M9K..... P. 165

Part Number Index (Continued)

RM24W3K..... P. 165
RM28M1GE1K ..... P. 166
RM28M1K..... P. 165
RMD26L1D28 ..... P. 205
RMDX6015D28..... P. 201
RRMDX6018D28..... P. 200
RMDX6019D28..... P. 201
RMDX6024D28..... P. 200
RMDX6026D28..... P. 200
RMDX602D28..... P. 204
RMDX6031D28 ..... P. 201
RMDX6032D28 ..... P. 200
RMDX6034D28..... P. 200
RMDX6036D28..... P. 200
RMDX6050D28..... P. 200
RMDX6052D28..... P. 200
RMDXB0553..... P. 204
RMDXK10D28..... P. 200
RMPOF1000..... P. 171
RMW5016K..... P. 168
RMW50A7K..... P. 168
SC14M1S18..... P. 165
SC14M1S31..... P. 165
SC14M1TK6..... P. 165
SC14ML1S18..... P. 165
SC14ML1S31..... P. 165
SC14ML1TK6..... P. 165
SC16M11S18..... P. 165
SC16M11S31..... P. 165
SC16M11TK6..... P. 165
SC16M1S18..... P. 165
SC16M1S31..... P. 165
SC16M1TK6..... P. 165
SC16ML11S18..... P. 165
SC16ML11S31..... P. 165
SC16ML11TK6..... P. 165
SC16ML1S18..... P. 165
SC16ML1S31..... P. 165
SC16ML1TK6..... P. 165
SC20M1S18..... P. 165
SC20M1S31..... P. 165
SC20M1TK6..... P. 165
SC20ML1S18..... P. 165
SC20ML1S31..... P. 165
SC20ML1TK6..... P. 165
SC20W3S25..... P. 165
SC20W3TK6..... P. 165
SC20WL3S25..... P. 165
SC20WL3TK6..... P. 165
SC24M1S18..... P. 165
SC24M1S31..... P. 165
SC24M1TK6..... P. 165
SC24ML1S18..... P. 165
SC24ML1S31..... P. 165
SC24ML1TK6..... P. 165
SC24W3S25..... P. 165
SC24W3TK6..... P. 165
SC24WL3S25..... P. 165
SC24WL3TK6..... P. 165
SM14M1S18..... P. 165
SM14M1S31..... P. 165
SM14M1TK6..... P. 165
SM14ML1S18..... P. 165
SM14ML1S31..... P. 165
SM14ML1TK6..... P. 165
SM16M11S18..... P. 165
SM16M11S31..... P. 165
SM16M11TK6..... P. 165
SM16M1S18..... P. 165
SM16M1S31..... P. 165
SM16M1TK6..... P. 165
SM16ML11S18..... P. 165
SM16ML11S31..... P. 165
SM16ML11TK6..... P. 165
SM16ML1S18..... P. 165
SM16ML1S31..... P. 165
SM16ML1TK6..... P. 165
SM20M1S18..... P. 165
SM20M1S31..... P. 165
SM20M1TK6..... P. 165
SM20ML1S18..... P. 165
SM20ML1S31..... P. 165
SM20ML1TK6..... P. 165
SM20W3S26..... P. 165
SM20W3TK6..... P. 165
SM20WL3S26..... P. 165
SM20WL3TK6..... P. 165
SM24M1S18..... P. 165
SM24M1S31..... P. 165
SM24M1TK6..... P. 165
SM24ML1S18..... P. 165
SM24ML1S31..... P. 165
SM24ML1TK6..... P. 165
SM24W3S26..... P. 165
SM24W3TK6..... P. 165
SM24WL3S26..... P. 165
SM24WL3TK6..... P. 165

Tooling

51060210924..... P. 175
51060210936..... P. 175
M10S1J..... P. 202
M10SG8..... P. 203
M317..... P. 175
MH860..... P. 175
MH86164G..... P. 175
MH86186..... P. 175
RX2025GE1..... P. 175
RX20D44..... P. 175
S16RCM14..... P. 175
S16RCM16..... P. 175
S16RCM20..... P. 175
S16SCM20..... P. 175
S16SCML1..... P. 175
S16SCML11..... P. 175
S20RCM..... P. 175
S20SCM20..... P. 175
S221..... P. 204
S23D2..... P. 204
S26D2..... P. 204
S80..... P. 203
S82..... P. 206
S83..... P. 203
S87..... P. 206
S88..... P. 206
SHANDLES..... P. 175
SL105..... P. 203
SL46D2..... P. 204
SL471..... P. 204
UH25..... P. 175
VGE10077A..... P. 175
VGE10078A..... P. 175

Reliable People, Reliable Solutions

Your local contact

PEFC
10-31-1299

Our contribution to environmental protection:
This catalog is printed on PEFC certified paper
Advancement of sustainable wood cultivation. www.pefc.org

SOURIAU

www.souriau-industrial.com
contactindustry@souriau.com

Esterline
Connection Technologies

WCAUTSEUSEN01 © Copyright SOURIAU March 2014 - SOURIAU is a registered trademark
All information in this document presents only general particulars and shall not form part of any contract. All rights reserved to SOURIAU for changes without prior notification or public announcement. Any duplication is prohibited, unless approved in writing.