REVISIONS				
REV. SYM.	E.C.O. NUMBER	DESCRIPTION	BY DATE	APP'D DATE
1		ORIGINAL RELEASE	AAM 9-1-00	RRR 9-1-00

UNCONTROLLED DOCUMENT WILL NOT BE UPDATED

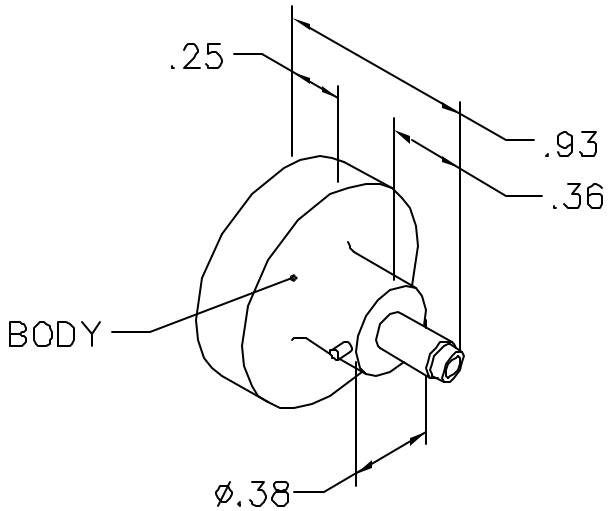

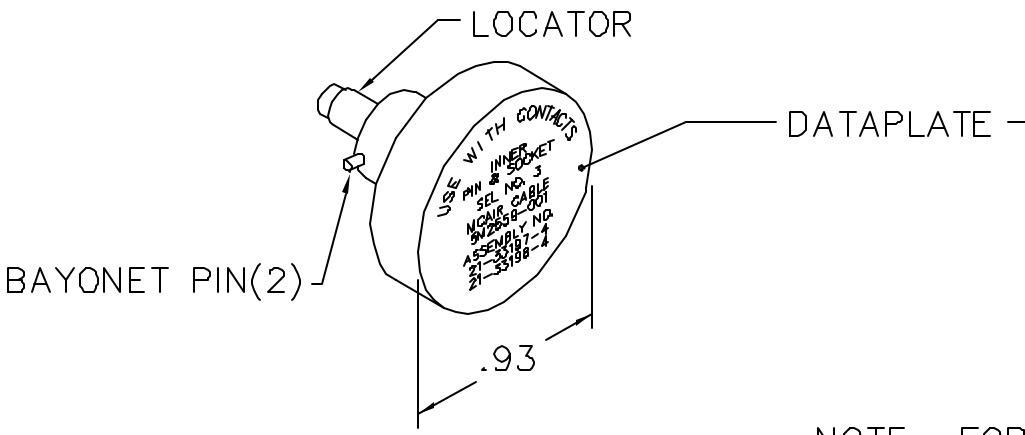

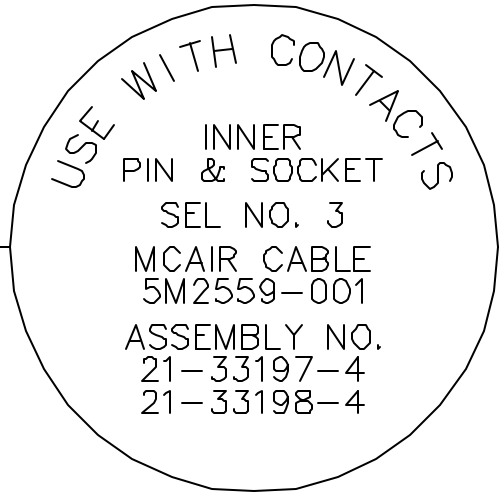

NOTE: FOR USE WITH DANIELS CRIMP TOOLS ACCOMMODATING "K" SERIES POSITIONERS

LOCATOR	
HOLE DIMENSIONS	ADDITIONAL FEATURES
ø.041 ↧.58 MIN.	⌴ ø.054 ↧.040

RESTRICTED & CONFIDENTIAL

CONFIDENTIAL PROPERTY OF DANIELS MANUFACTURING CORP. NOT TO BE DISCLOSED TO OTHERS, REPRODUCED OR USED FOR ANY OTHER PURPOSE, EXCEPT AS AUTHORIZED IN WRITING BY DANIELS MANUFACTURING. MUST BE RETURNED TO DANIELS MANUFACTURING CORP. ON COMPLETION OF ORDER OR OTHER PURPOSE FOR WHICH LENT.

DO NOT SCALE DRAWING

DRN. A. MOO-YOUNG	DATE 9-1-00	DANIELS MANUFACTURING CORP. ORLANDO, FLORIDA CAGE 11851	
CHK'D. RRR	DATE 9-1-00		
APP'D.	DATE	TITLE ENVELOPE DRAWING POSITIONER	
APP'D.	DATE	WHERE USED: AFM8	
NOTE: THIS DRAWING IS AN OUTLINE DRAWING OF THE RESPECTIVE DMC PART NUMBER INDICATED. ACTUAL DMC PART NUMBER IS DRAWING NUMBER WITHOUT THE "-ENV" SUFFIX.		SIZE A / SCALE NTS / CAD P/N K873-ENV	SHEET 1 OF 1
		POSTING / DWG. NO. K873-ENV	REV. 1