MATERIAL NUMBER	ALTERNATE NUMBER	"S"	WIRE RANGE	COLOR	PACKAGING
190570007	A-521-06	.146/3.70	22-18 AWG	RED	LOOSE PIECE
190570009	A-521-08	.173/4.39	22-18 AWG	RED	
190570011	A-521-10	.198/5.02	22-18 AWG	RED	
190570008	A-521-06T	.146/3.70	22-18 AWG	RED	TAPE
190570010	A-521-08T	.173/4.39	22-18 AWG	RED	
190570012	A-521-10T	.198/5.02	22-18 AWG	RED	

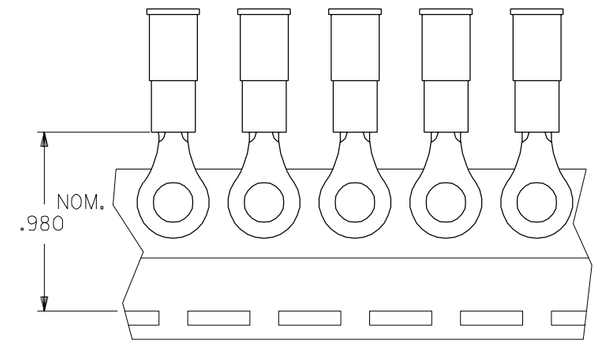

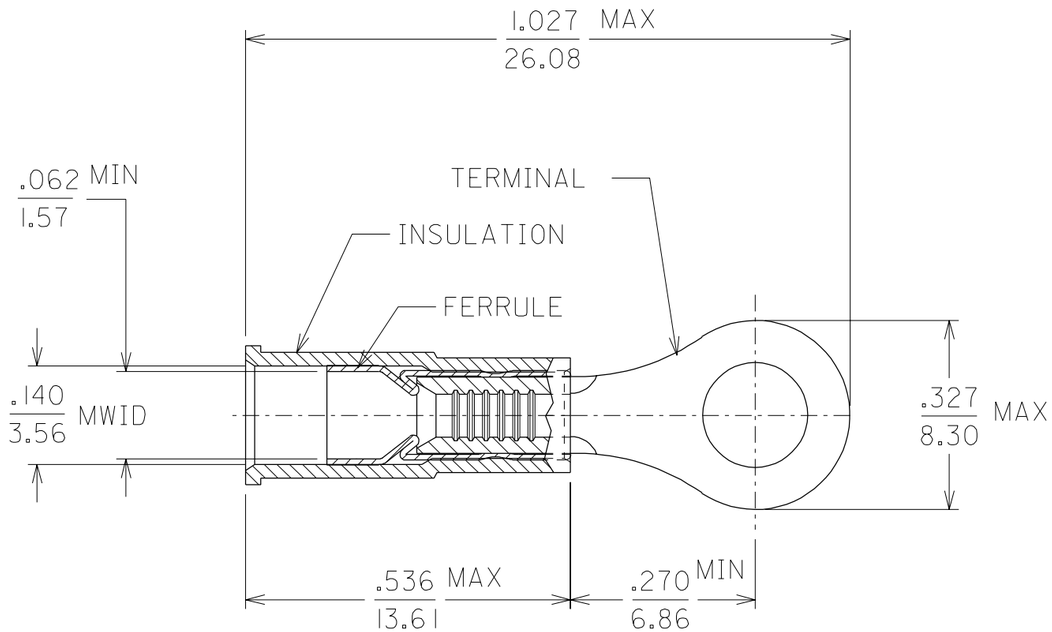

1. MATERIAL: TERMINAL:COPPER .028/.711 THICK.
   FUNNEL FERRULE: BRASS
   PLATING: ELECTRO TIN
   INSULATION: NYLON 6/6
   COLOR: SEE CHART
2. MWID = MAXIMUM WIRE INSULATION DIAMETER
3. ALL DIMENSIONS = INCHES / MM

CUSTOMER DRAWING

LTR.	REVISIONS
A	NEW CUST. DWG. ETC2001-0288 01/03/23 EDB

DIMENSIONS SHOWN (METRIC) INCH

UNLESS OTHERWISE SPECIFIED TOLERANCES: ANGULAR ± 1/2°

	INCH	METRIC
3 PLACE	± .005	± ---
2 PLACE	± .01	± 0.13
1 PLACE	± ---	± 0.25

DRAFT WHERE APPLICABLE MUST REMAIN WITHIN DIMENSIONS

REVISE ONLY ON CAD SYSTEM

TITLE
RING TONGUE TERMINAL
AVIKRIMP
500 SERIES

molex ETC INC.
PINELLAS PARK, FLA. 33781 U.S.A.

SHEET NO. 1 OF 1
DATE 01/03/23

PART NO. SEE TABLE
DRWG. NO. SD-19057-002

DRWG. BY EDB
CHK'D. BY HEB
APP'D. BY RWD
SCALE NO:NE

FILE NAME SD19057002 DGN

THIS DRAWING CONTAINS INFORMATION THAT IS PROPRIETARY TO MOLEX-ETC INC. AND SHOULD NOT BE USED WITHOUT WRITTEN PERMISSION.

DIV. ET
SIZE B