THIS DRAWING IS UNPUBLISHED. RELEASED FOR PUBLICATION -,- .
© COPYRIGHT - By - ALL RIGHTS RESERVED.

| LOC | DIST |
|---|---|
| GP | 00 |

REVISIONS

| P | LTR | DESCRIPTION | DATE | DWN | APVD |
|---|---|---|---|---|---|
| | Z1 | REVISED PER ECO-11-004835 | 11MAR11 | RK | HMR |

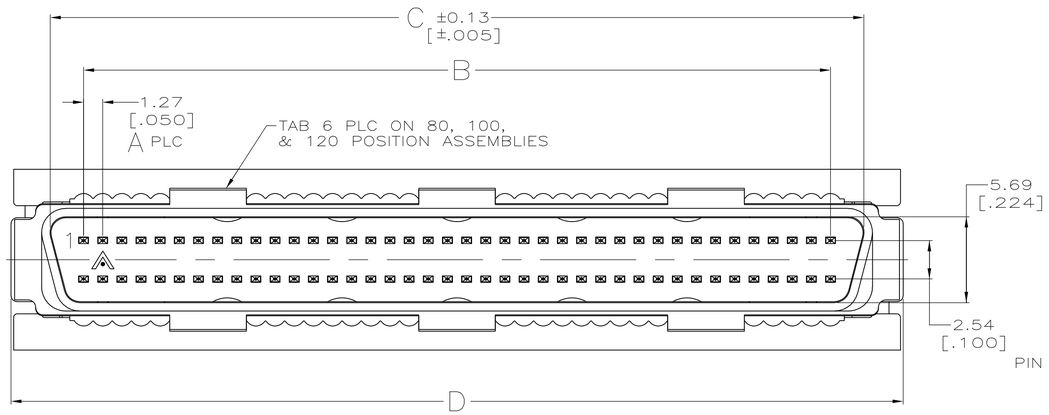


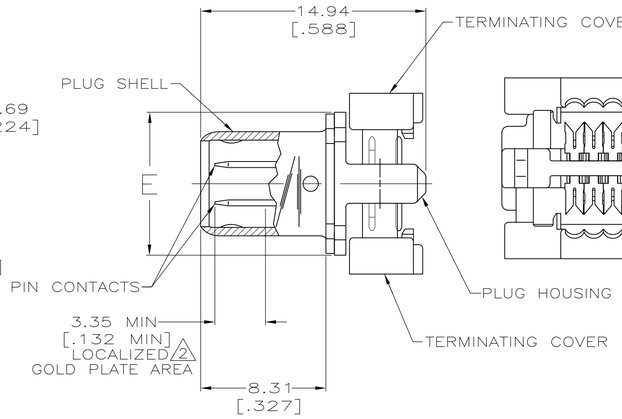


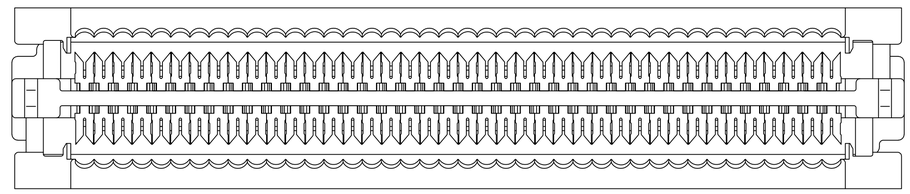

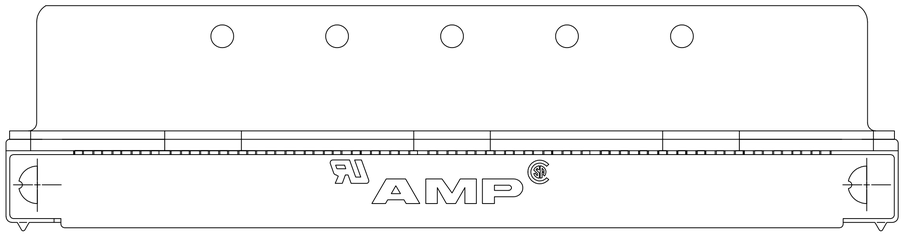


| | | | | | | | | |
|---|---|---|---|---|---|---|---|---|
| SUPERSEDED BY 5749111-8 | 4 | 9.47 [.373] | 71.86 [2.829] | 66.60 [2.622] | 62.23 [2.450] | 49 | 100 | 1-749111-4 |
| SUPERSEDED BY 5749111-4 | 4 | 7.44 [.293] | 40.11 [1.579] | 34.85 [1.372] | 30.48 [1.200] | 24 | 50 | 1-749111-3 |
| SUPERSEDED BY 5749111-3 | 4 | 7.44 [.293] | 33.76 [1.329] | 28.50 [1.122] | 24.13 [.950] | 19 | 40 | 1-749111-2 |
| OBSOLETE | 2 | 7.44 [.293] | 31.22 [1.229] | 25.96 [1.022] | 21.59 [.850] | 17 | 36 | 1-749111-1 |
| SUPERSEDED BY 1-5749111-0 | 2 | 7.44 [.293] | 24.87 [.979] | 19.61 [.772] | 15.24 [.600] | 12 | 26 | 1-749111-0 |
| SUPERSEDED BY 5749111-9 | 2 | 9.47 [.373] | 84.56 [3.329] | 79.30 [3.122] | 74.93 [2.950] | 59 | 120 | 749111-9 |
| | 2 | 9.47 [.373] | 71.86 [2.829] | 66.60 [2.622] | 62.23 [2.450] | 49 | 100 | 749111-8 |
| SUPERSEDED BY 5749111-7 | 2 | 9.47 [.373] | 59.16 [2.329] | 53.90 [2.122] | 49.53 [1.950] | 39 | 80 | 749111-7 |
| | 2 | 7.44 [.293] | 51.54 [2.029] | 46.28 [1.822] | 41.91 [1.650] | 33 | 68 | 749111-6 |
| OBSOLETE | 2 | 7.44 [.293] | 46.46 [1.829] | 41.20 [1.622] | 36.83 [1.450] | 29 | 60 | 749111-5 |
| SUPERSEDED BY 5749111-4 | 2 | 7.44 [.293] | 40.11 [1.579] | 34.85 [1.372] | 30.48 [1.200] | 24 | 50 | 749111-4 |
| OBSOLETE | 2 | 7.44 [.293] | 33.76 [1.329] | 28.50 [1.122] | 24.13 [.950] | 19 | 40 | 749111-3 |
| OBSOLETE | 2 | 7.44 [.293] | 26.14 [1.029] | 20.88 [.822] | 16.51 [.650] | 13 | 28 | 749111-2 |
| | 2 | 7.44 [.293] | 21.06 [.829] | 15.80 [.622] | 11.43 [.450] | 9 | 20 | 749111-1 |
| | FINISH | E | D | C | B | A | NO OF POSN | PART NO |

1. MATERIAL:
PIN CONTACTS - PHOSPHOR BRONZE.
PLUG SHELL - STEEL.
PLUG HOUSING & TERMINATING COVERS - UL V-O RATED THERMOPLASTIC, COLOR: BLACK.

2. FINISH:
PIN CONTACTS - EITHER 0.76μm [.000030] MIN GOLD PLATE OR GOLD FLASH OVER PALLADIUM NICKEL PLATE, 0.76μm [.000030] MIN TOTAL IN LOCALIZED PLATE AREA, 1.52μm [.000060] MIN TIN-LEAD IN TERMINATION AREA, ALL OVER 1.27μm [.000050] MIN NICKEL.
PLUG SHELL - 0.25μm [.000010] MIN TIN-NICKEL OVER 3.81μm [.000150] MIN NICKEL OVER 2.54μm [.000100] MIN COPPER.

3. RECOMMENDED WIRE: 28 AWG OR 30 AWG, SOLID OR 7 STRAND, PVC INSULATION WITH A 0.74-0.91 [.029-.036] INSULATION DIAMETER.

4. FINISH:
PIN CONTACTS - PLATED WITH EITHER 0.76μm [.000030] MIN GOLD PLATE OR GOLD FLASH OVER PALLADIUM NICKEL PLATE, 0.76μm [.000030] MIN TOTAL IN LOCALIZED PLATE AREA, 3.00μm [.000118] MIN TIN IN TERMINATION AREA, ALL OVER 1.27μm [.000050] MIN NICKEL.
PLUG SHELL - 0.25μm [.000010] MIN TIN-NICKEL OVER 3.81μm [.000150] MIN NICKEL OVER 2.54μm [.000100] MIN COPPER.

THIS DRAWING IS A CONTROLLED DOCUMENT.

DIMENSIONS: mm[INCHES]

TOLERANCES UNLESS OTHERWISE SPECIFIED:
0 PLC ± -
1 PLC ± -
2 PLC ± 0.38 [.015]
3 PLC ± -
4 PLC ± -
ANGLES ± -

MATERIAL 1
FINISH SEE TABLE

DWN M.A.McCAFFREY 11-17-88
CHK M.E.SHIRK 11-17-88
APVD -
PRODUCT SPEC 108-1228
APPLICATION SPEC 114-40029
WEIGHT -

TE Connectivity

NAME PLUG ASSEMBLY, AMPLIMITE .050 Series

| SIZE | CAGE CODE | DRAWING NO | RESTRICTED TO |
|---|---|---|---|
| A1 | 00779 | C-749111 | - |

CUSTOMER DRAWING | SCALE 5:1 | SHEET 1 OF 1 | REV Z1

4805 (3/11)