| SIGN | DATE | DESCRIPTION | APPROVER |
|---|---|---|---|
| 1 | 03/27'13 | Update the drawing | Jacky |
| 2 | 08/01'13 | Change the view | Jacky |
| 3 | 12/23'13 | Remove the stranded wire | Jacky |
| 4 | 03/27`15 | Update the drawing | Airy min |
| 5 | 03/27`15 | Add the safety certification icon | Airy min |

*THIS IS CAD DRAWING, DO NOT REVISE MANUALLY!!!*

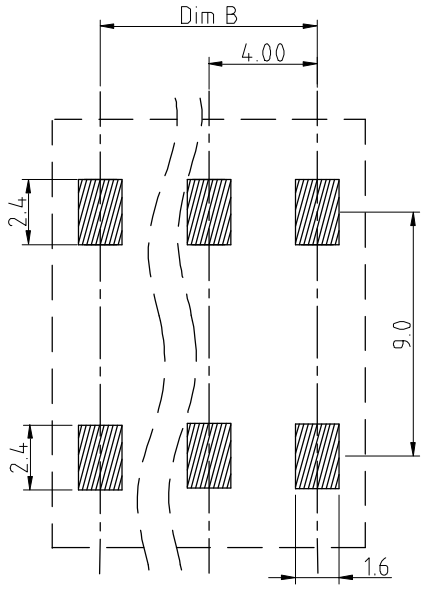


P.C.B. LAYOUT

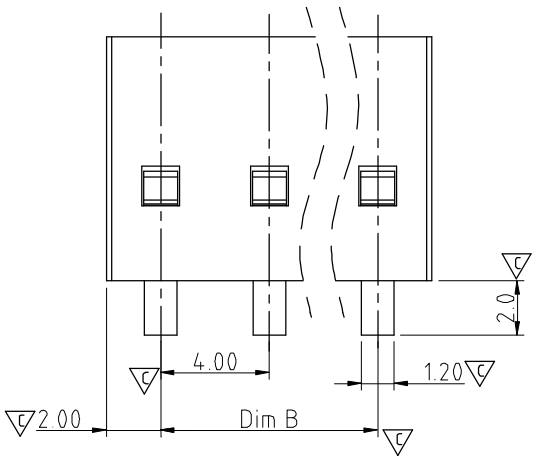


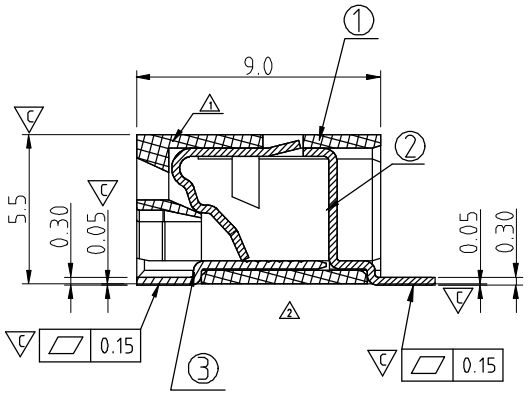


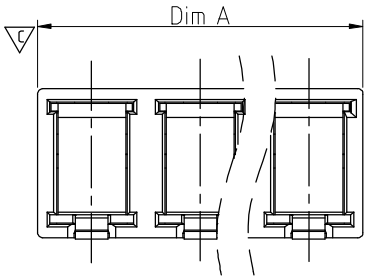


Material:

4 ● Item 1 Terminal housing:LCP (UL94V-0)
● Item 2 Long solder pin: Copper alloy, Matte Tin plated(high temperature)
● Item 3 Short solder pin: Brass .Matte Tin plated(high temperature)

5 Electrical UL /cULus (UL1977Standard)

● Voltage rating: 300VAC 300VAC
● Current rating: 9A 5A
● Wire range:
3 ● Solid wire(AWG): 18-24
● Tin Dipped Stranded wire(AWG): 18-24
● Wire strip length: 6-7mm
● Withstanding Voltage: 1.6KV
● Operating temperature: -45°C to +130°C
● Reflow soldering temperature: 260°C/10 Sec Max.
● Safety Approval: c us
● Critical dimension: C

NQ xx 2 1 x 0 xxxx G

4 No. OF POLES
02: 2 POLES
03: 3 POLES

4 color
0 Black (RAL9005)
1 Natural color
8 Grey

G RoHS compliant (lead<4%) In copper Alloy

0000: "@" Logo (Standard)
000A: "ANYTEK" Mark
Any special item by customer requst. please contact sales department.

N=Number of poles

| | |
|---|---|
| Dim.A | N×4.0 |
| Dim.B | (N-1) × 4.0 |

4

| POLES | TOLERANCE |
|---|---|
| 2P - 3P | -0.20/+0.20 |

**ANYTEK**

**CUSTOMER COPY**

ALL RIGHTS RESERVED. REPRODUCTION OR ISSUE TO THIRD PARTIES IN ANY FORM WHATEVER IS NOT PERMITTED WITHOUT WRITTEN AUTHORITY FROM THE PROPRIETOR. PROPERTY OF ANYTEK TECHNOLOGY CO., LTD

| | | | | | | |
|---|---|---|---|---|---|---|
| TITLE | NQ 4.0mm Series (SMT) | | | | | |
| PART NO. | NQxx21x0xxxxG | | | DWG NO. | 8NQ0101 | |
| APPROVED | CHECKED | DESIGNED | DRAWN | CUST NO. | | Tolerance |
| | | Airy min 2015/03/27 | Airy min 2015/03/27 | | UNIT: mm | X. ±0.50 |
| | | | | | SCALE: NONE | X.X ±0.30 |
| | | | | SHEET: 01/01 | REV.: C | X.XX ±0.10 |
| | | | | | | X° ±1° |