Alle Rechte vorbehalten/ *All rights reserved*

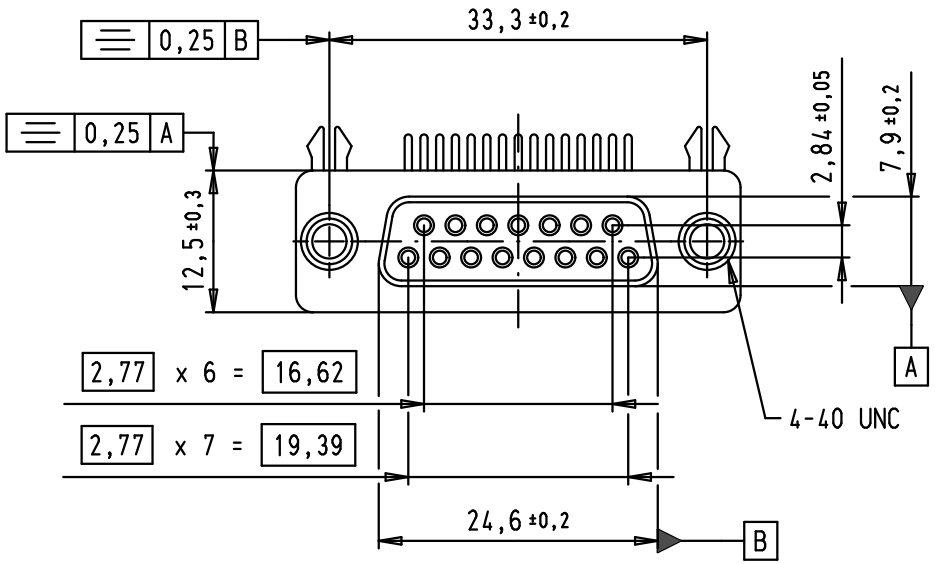

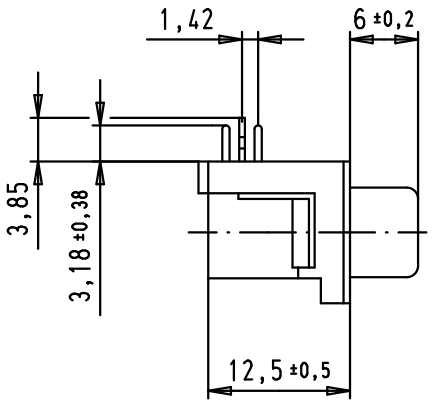

SPECIFICATIONS

FREQUENCY (MHz)	ATTENUATION (dB)
5	1
10	2
50	4
100	4,5
500	4,5
1000	4,5

Operating voltage	< 250 V AC
Working current	< 7,5 A
Insulation resistance	> 1GΩ
Contact resistance	< 15 mΩ
Dielectric withstanding voltage	500 V AC / minute

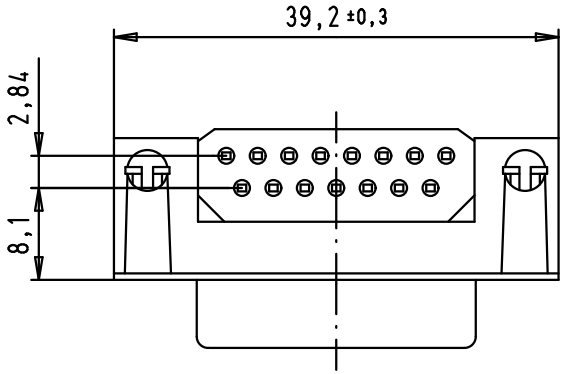

PCB layout, component side,
thickness between 1,6 and 3 mm

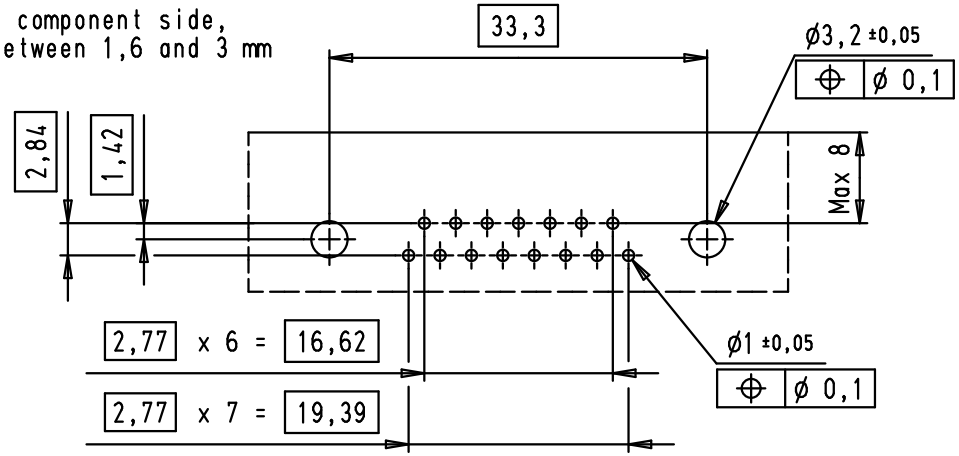

				Dat.	Name
			Detail.	02/07/09	PK
			Insp.		
			Stand.		
EC02296	06/09/10	SC			
EC00362	02/07/09	PK			
Mod.	Dat.	Name			

All Dim. in mm
Orig. Size DIN A 4

D-Sub, female, angled,
US footprint, 15 poles,
tin plated shell,
solder pins, ferrite filter

Maßstab/ *Scale* 1,5:1

HARTING EURL
F-95972 Paris

TB 09 64 213 7802

Sub.

Blatt/ *Page* 1/1

09 64 213 7802	PL3
Part number	Performance level