MICRO SWITCH
a Honeywell Division
FED. MFG. CODE 91929

SWITCH - ENCLOSED

CATALOG LISTING
ML-1282

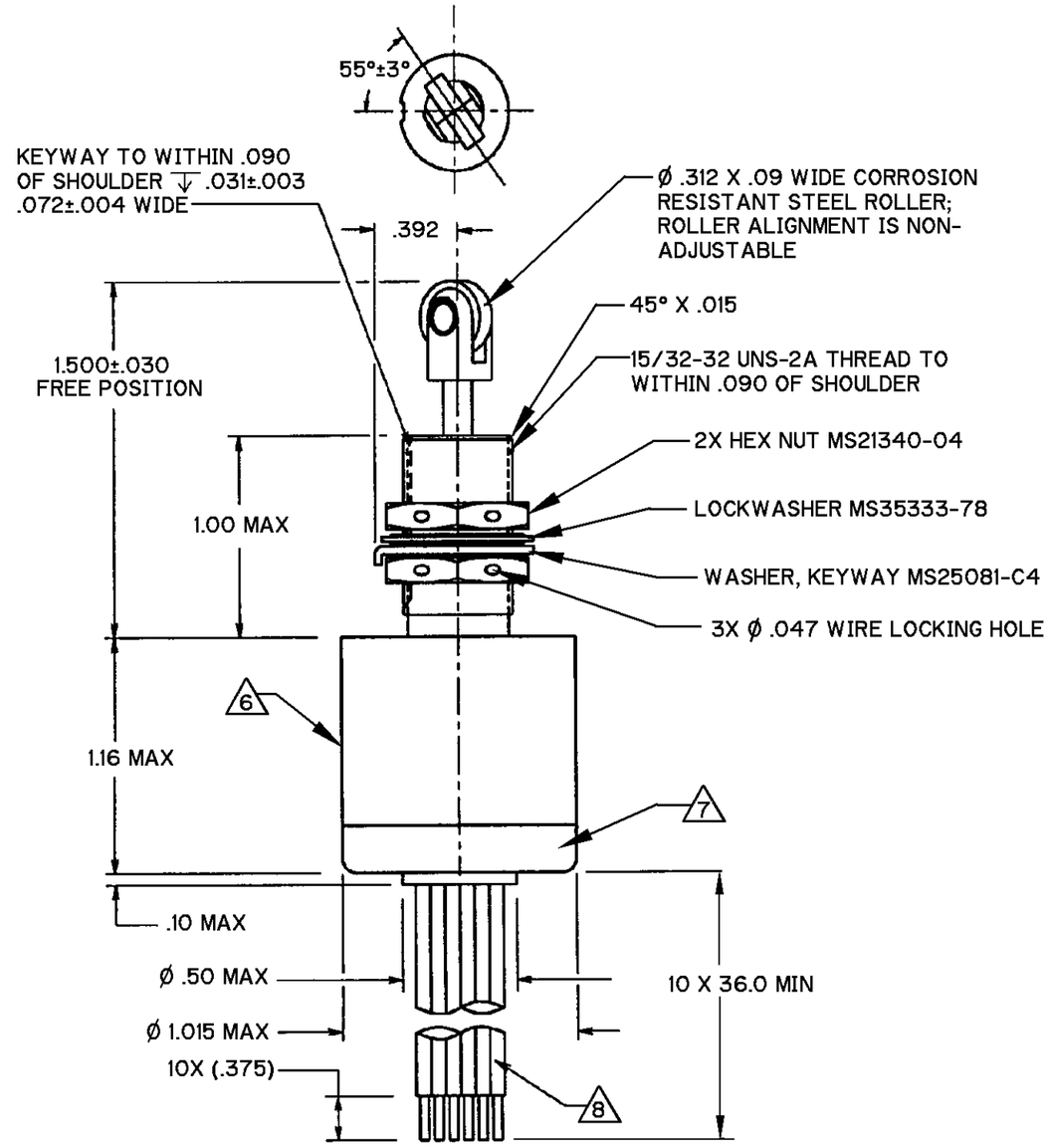

CIRCUIT DIAGRAM

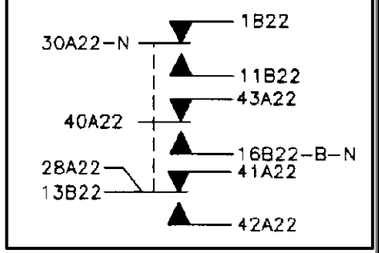

ANSI Y14.5M-1982 APPLIES

THIS DRAWING COVERS A PROPRIETARY ITEM AND IS THE PROPERTY OF MICRO SWITCH, A DIVISION OF HONEYWELL. THIS DRAWING IS NOT TO BE COPIED OR USED WITHOUT THE APPROVAL OF MICRO SWITCH

THIRD ANGLE PROJECTION

SCALE 2:1

DO NOT SCALE PRINT

UNLESS OTHERWISE SPECIFIED TOLERANCES ARE

ONE PLACE	(.0)	±.030
TWO PLACE	(.00)	±.015
THREE PLACE	(.000)	±.005
ANGLES		± 4°

WEIGHT

CHARACTERISTICS	
OPERATING FORCE	3 ± 1 LBS
FULL OVERTRAVEL FORCE	7 LBS MAX
RELEASE FORCE	.5 LBS MIN
PRETRAVEL	.040 MAX
DIFFERENTIAL TRAVEL	.020 MAX
OVERTRAVEL	.125 MIN

ELECTRICAL DATA

CONTACT ARRANGEMENT
3X SPDT

LOAD (AMPS)	28 VDC	
	SEA LEVEL	50,000 FT
RESISTIVE	1	1
INDUCTIVE	.5	.5
MOTOR	—	—

NOTES
1 - COINCIDENCE OF OPERATING AND RELEASING POINTS: .010 OF PLUNGER TRAVEL
2 - CORROSION RESISTANT STEEL ENCLOSURE, PLUNGER & ROLLER
3 - SWITCH SEALED PER MIL-PRF-8805 SYMBOL 3
4 - BASIC SWITCHES HAVE SOLID GOLD CONTACT MATERIAL
5 - SWITCH CURRENT LEVELS SHALL NOT BE MORE THAN 100 MILLIAMPS AT 28 VDC
6 PRINT CIRCUIT DIAGRAM, CATALOG LISTING, DATE CODE AND 1534AS392-1 ON NAMEPLATE
7 PLASTIC MATERIAL(S) SHALL CONFORM TO MIL-M-14 OR MIL-M-24519
8 10X MIL-W-22759/11-22-9 WIRE LEAD MARKED WITH CIRCUIT IDENTIFICATION PER MIL-W-5088

CATALOG LISTING ML-1282
PAGE 1 OF 1
ISSUE 2
REPLACES
RELEASE NO. PR-24164
CHECK
REVISIONS
A GJW DEC 01 204442
CHECK
18 OCT 99 SAV
CHECK
18 OCT 99 CSL
DRAWN
RASTER