REVISIONS					
REV	ECO	DESCRIPTION	DATE	BY	APPR
A1	-	FIRST RELEASE	Oct.30,2017	White	Tommy

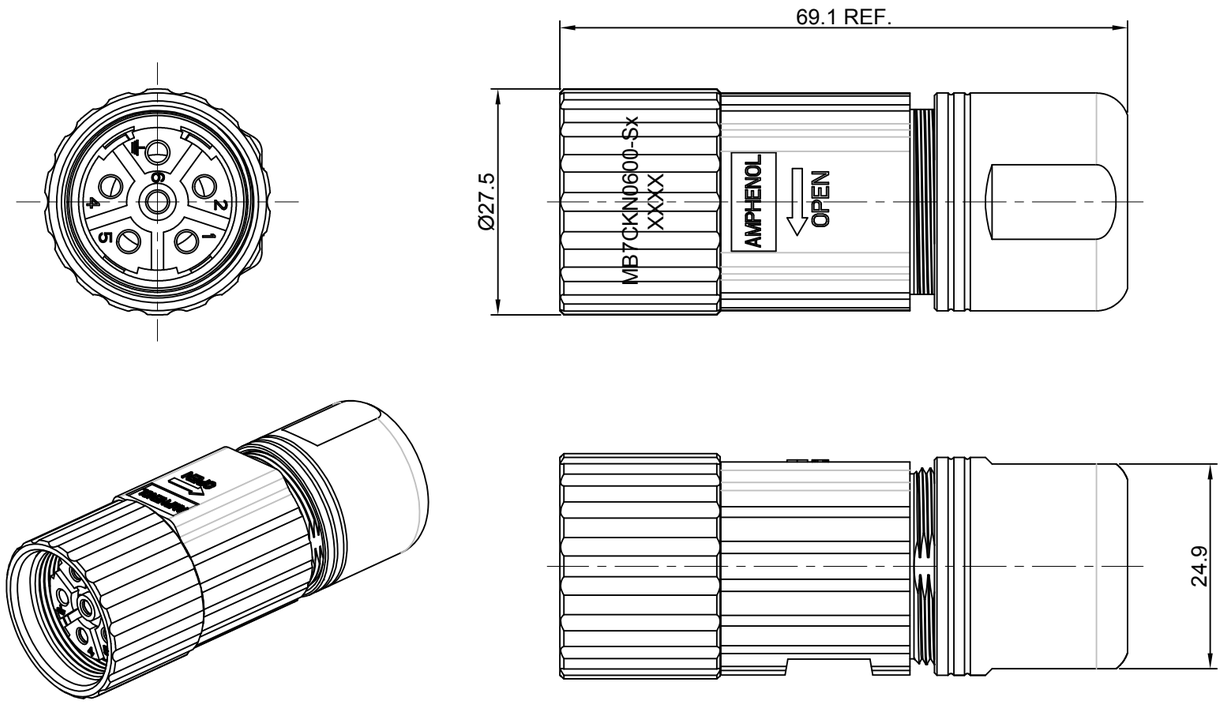

NOTES: UNLESS OTHERWISE SPECIFIED

1. MATERIAL:
   INSULATION INSERT: PA66,UL94 V0
   SEAL: VITON, EPDM
   HOUSING BODY:COPPER ALLOY, NICKEL PLATED
   CONTACT: COPPER ALLOY, GOLD PLATED

2. SPECIFICATIONS:
   2.1 CURRENT RATING: 28 AMPS
   2.2 VOLTAGE RATING: 630V AC/DC
   2.3 CONTACT RESISTANCE: <3 mOHMS
   2.4 OPERATING TEMPERATURE: -20°C TO +130°C
   2.5 DIELECTRIC WITHSTANDING VOLTAGE: LESS THAN 2 MILLIAMPS CURRENT LEAKAGE @ 6000 VOLTS AC.
   2.6 DEGREE OF PROTECTION: IP67 (MATED CONDITION)
   2.7 DEGREE OF POLLUTION: 3 PER UL840
   2.8 OVERVOLTAGE CATEGORY: III PER UL840
   2.9 MATING CYCLE DURABILITY: >500 CYCLES
   2.10 RoHS COMPLIANT

3. ALL DIMENSIONS ARE FOR REFERENCE USE ONLY.

Item	Part number	Connector P/N	Cable OD Range
1	MB7CKN0600-S1-KIT	MB7CKN0600-S1	7.5~11.0 mm
2	MB7CKN0600-S2-KIT	MB7CKN0600-S2	11.0~14.5 mm
3	MB7CKN0600-S3-KIT	MB7CKN0600-S3	14.5~17.0 mm

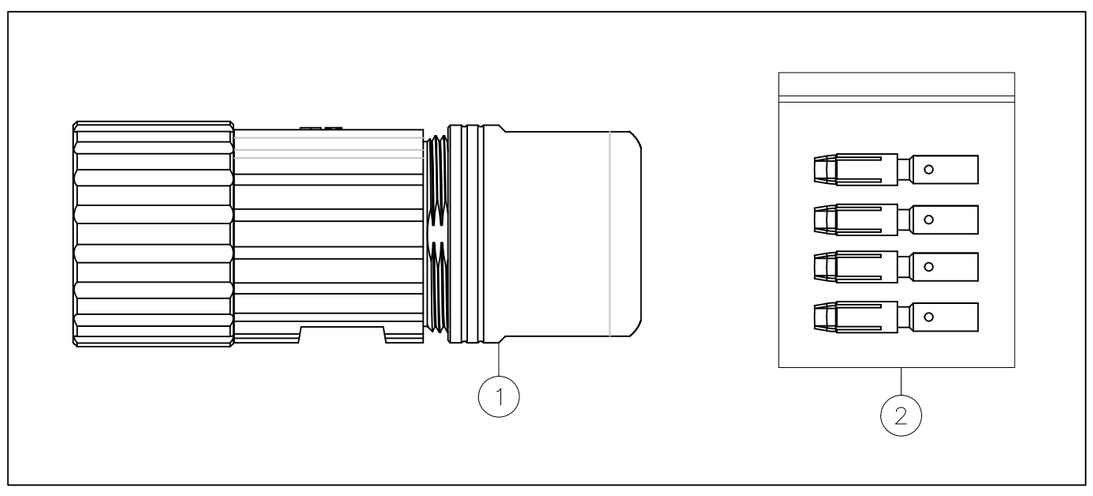

QUANTITY	PART NUMBER	DESCRIPTION	ITEM
6	SC000260	Socket contact,2.0mm,Crimp 14~18AWG	2
1	MB7CKN0600-Sx	CONNECTOR	1

MATERIALS LIST

UNLESS OTHERWISE SPECIFIED
1) All dimensions are in metric(mm).
2) Tolerances are as follows:
1 PL DEC ±0.30 | Fractions ±1/64
2 PL DEC ±0.15 | Angles ±1°
3 PL DEC ±0.08
3) Note reference = X

MATERIAL SPECIFICATIONS:

PROCESS SPECIFICATIONS:

NEXT ASS'Y:

SIGNATURES		DATE
DRAWN:	White	Oct.30,17
CHECKED:	Tod	Oct.30,17
ENGINEER:		
APPROVAL:	Tommy	Oct.30,17
CUSTOMER:		

THIS DRAWING IS SUPPLIED FOR INFORMATION ONLY. DESIGN FEATURES, SPECIFICATIONS AND PERFORMANCE DATA SHOWN HEREON ARE THE PROPERTY OF THE AMPHENOL CORPORATION. NO RIGHTS OF REPRODUCTION ARE IMPLIED. ALL DIMENSIONS ARE SUBJECT TO NORMAL MANUFACTURING VARIATIONS.

Amphenol
Sine Systems - www.amphenol-sine.com
44724 Morley Drive
Clinton Township, MI 48036

KIT;M23B,PLUG,STRAIGHT,6POS

SIZE	TYPE	DWG NO:	REVISION
B	C-	MB7CKN0600-Sx-KIT	A1

SCALE: NONE SHEET 1 OF 1

TITLE: KIT;M23B,PLUG,STRAIGHT,6POS
DWG NO: MB7CKN0600-Sx-KIT
REV: A1
SH: 1
OF: 1