THIS DRAWING IS UNPUBLISHED. RELEASED FOR PUBLICATION 20
© COPYRIGHT 20 BY TYCO ELECTRONICS CORPORATION. ALL RIGHTS RESERVED.

LOC	DIST
IN	00

REVISIONS

P	LTR	DESCRIPTION	DATE	DWN	APVD
	I	PRELIMINARY PER 0K40-348-04	05OCT2004	DJH	LLV
	O	RELEASED PER EC 0K40-0004-05	07JAN2005	DLD	LLV
	A	REVISED PER EC 0K41-0032-05	14JAN2005	KP	LLV
	B	REVISED PER ECO-10-013915	06JUL2010	DLD	LLV

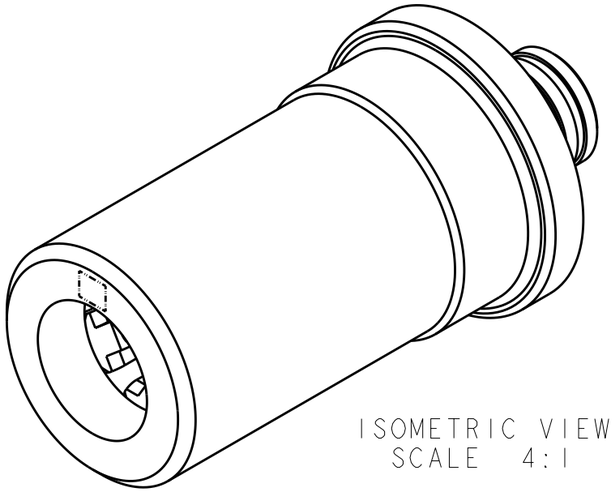

ISOMETRIC VIEW
SCALE 4:1

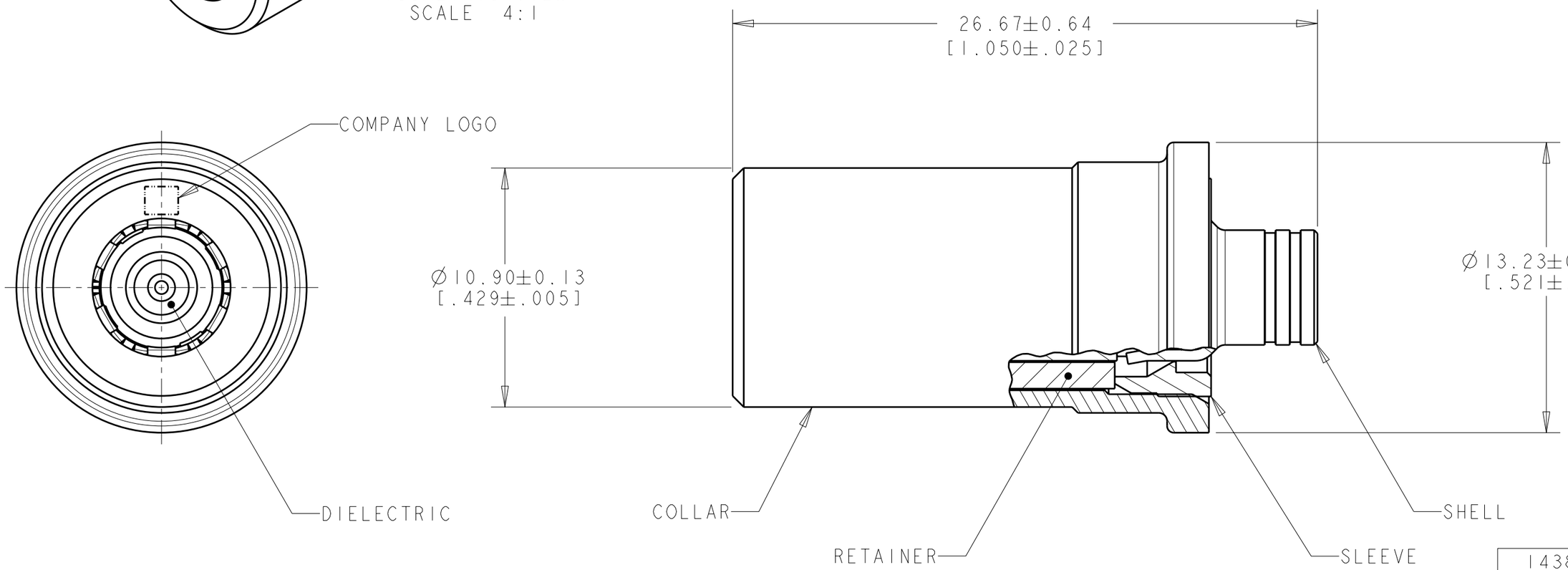

1438810-1
PART NUMBER

1. COLLAR, RETAINER AND SLEEVE: PBT, BLACK.
   DIELECTRIC: POLYMETHYLPENTENE, NATURAL.
   SHELL: PHOSPHOR BRONZE.

2. SHELL: 2.54µm [.000100] MIN TIN OVER
   1.27µm [.000050] MIN NICKEL.

THIS DRAWING IS A CONTROLLED DOCUMENT FOR TYCO ELECTRONICS CORPORATION. IT IS SUBJECT TO CHANGE AND THE CONTROLLING ENGINEERING ORGANIZATION SHOULD BE CONTACTED FOR THE LATEST REVISION.

DIMENSIONS: mm [INCHES]

TOLERANCES UNLESS OTHERWISE SPECIFIED:
0 PLC ±-
1 PLC ±-
2 PLC ±-
3 PLC ±-
4 PLC ±-
ANGLES ±-

MATERIAL 1
FINISH 2

DWN D.J. HARDY 20SEP2004
CHK J.W. HALL 20SEP2004
APVD J.W. HALL 20SEP2004
PRODUCT SPEC -
APPLICATION SPEC -
WEIGHT -

Tyco Electronics
Tyco Electronics
Harrisburg, PA 17105-3608

NAME
PLUG SUB-ASSEMBLY, SNAP-LOCK

SIZE	CAGE CODE	DRAWING NO	RESTRICTED TO
A3	00779	C-1438810	-

CUSTOMER DRAWING
SCALE 5:1 SHEET 1 OF 1 REV B

AMP 1470-19 REV 31MAR2000

Pro/ENGINEER DRAWING