DATE	REVISIONS	REV

DRAWING NUMBER
SSL-LX5093HD-TR20

REV

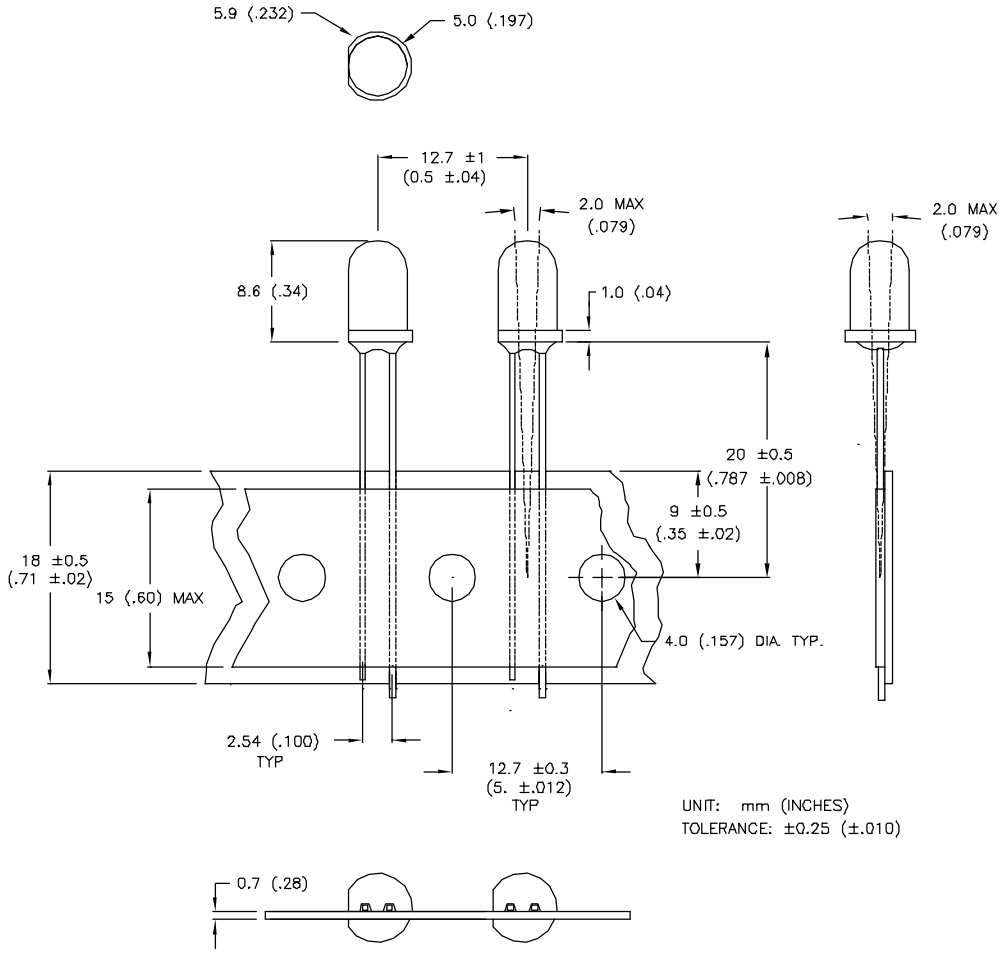

UNIT: mm (INCHES)
TOLERANCE: ±0.25 (±.010)

TAPE FEED DIRECTION →

ELECTRO-OPTICAL CHARACTERISTICS $T_A = 25°C$ $I_f = 20mA$

PARAMETER	MIN	TYP	MAX	UNITS	TEST COND
PEAK WAVELENGTH		700 (RED)		nm	
FORWARD VOLTAGE		2.1	2.8	V_f	
REVERSE VOLTAGE	5.0			V_r	$I_r = 100uA$
AXIAL INTENSITY		10		mcd	$I_f = 20mA$
VIEWING ANGLE		80		2x theta	
EMITTED COLOR	RED				
EPOXY LENS FINISH	RED DIFFUSED				

LIMITS OF SAFE OPERATION AT 25°C

PARAMETER	MAX	UNITS
PEAK FORWARD CURRENT*	150	mA
STEADY CURRENT	25	mA
POWER DISSIPATION	120	mW
DERATE FROM 25°C	-1.2	mW/°C
OPERATING, STORAGE TEMP	-40 TO +85	°C
LEAD SOLDERING TEMP	+260	°C
2.0mm FROM BODY		3 SEC. MAX

* t<10uS

RELIABILITY NOTE

OUR MANY YEARS OF EXPERIENCE DATA ACCUMULATION INDICATE THAT SOLDER HEAT IS A MAJOR CAUSE OF EARLY AND FUTURE FAILURE. PLEASE PAY ATTENTION TO YOUR SOLDERING PROCESS.

LUMEX OPTO COMPONENTS INC.
292 E. HELLEN ROAD
PALATINE, ILLINOIS 60067
(708) 359-2790

CONFIDENTIAL INFORMATION
THE INFORMATION CONTAINED IN THIS DOCUMENT IS THE PROPERTY OF LUMEX OPTO/COMPONENTS, INC. EXCEPT AS SPECIFICALLY AUTHORIZED IN WRITING BY LUMEX OPTO/COMPONENTS, INC., THE HOLDER OF THIS DOCUMENT SHALL KEEP ALL INFORMATION CONTAINED HEREIN CONFIDENTIAL AND SHALL PROTECT SAME IN WHOLE OR IN PART FROM DISCLOSURE AND DISSEMINATION TO ALL THIRD PARTIES.

DATE: 1-17-96	DWN:	CHK'D:	APPD:
SCALE: N/A			

T-5 (T-1 3/4) LED, RED DIFFUSED
TAPE AND REEL

DRAWING NUMBER
SSL-LX5093HD-TR20

REV

DK/MS