DESCRIPTION: M12 FEMALE - CABLE MOUNT - SOLDER CUP - 8 POSITION

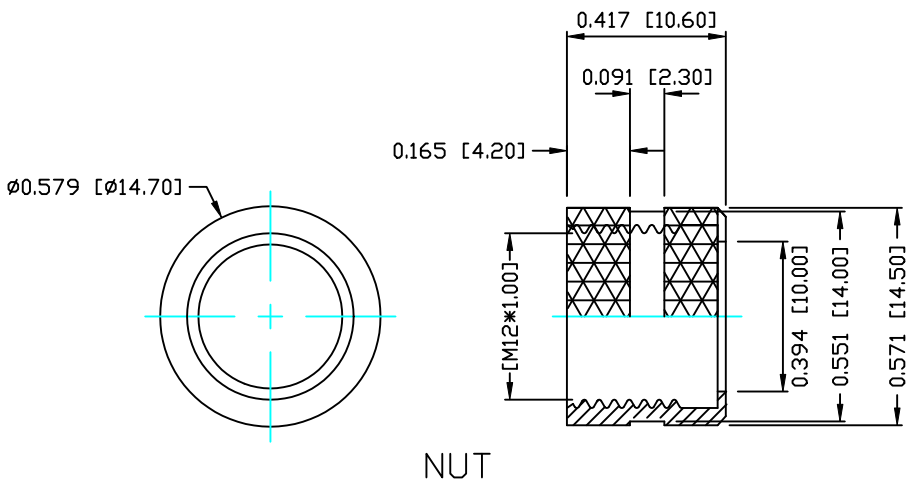

NOTE:

MATERIAL	
HOUSING:	PBT UL94V-0, BLACK
CONTACT:	BRASS
NUT:	BRASS
SHELL:	BRASS
O-RING:	NBR, BLACK
FINISH	
CONTACT:	GOLD FLASH (0.8-1.0)µ" OVER 50µ" NICKEL
NUT:	NICKEL PLATED
SHELL:	NICKEL PLATED
ELECTRICAL	
RATED CURRENT:	5A
RATED VOLTAGE:	125V
WATER PROOF:	IP67
ENVIRONMENT	
OPERATION TEMPERATURE:	-40°C TO +85°C
WIRE GAUGE:	24-28 AWG

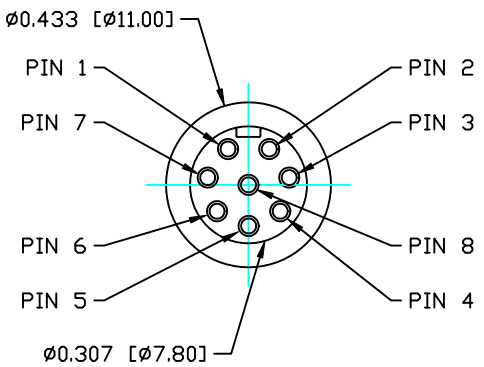

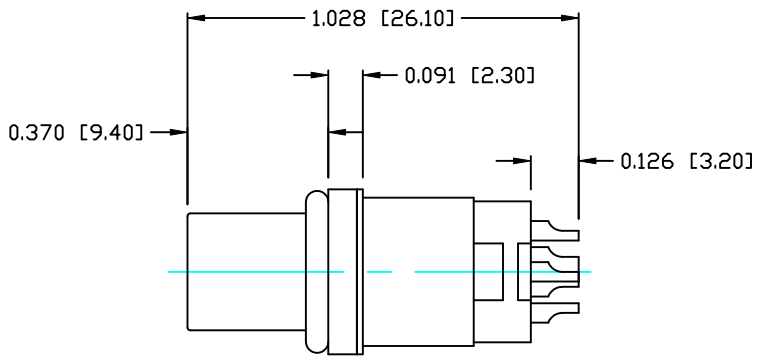

RoHS COMPLIANT

DO NOT SCALE FROM DRAWING

THESE DRAWINGS AND SPECIFICATIONS ARE THE PROPERTY OF NorComp AND SHALL NOT BE REPRODUCED, COPIED OR USED AS THE BASIS FOR THE MANUFACTURE OR SALE OF APPARATUS WITHOUT WRITTEN PERMISSION.

DRAWN: C. SMITH	DATE: 08/08/14	NorComp	SCALE: NTS	SHEET 1 OF 1	REV 1
CHECKED:	DATE:		DWG NO. 858-008-203RLS1		