THIS DRAWING IS UNPUBLISHED. RELEASED FOR PUBLICATION 20
© COPYRIGHT 20 BY TYCO ELECTRONICS CORPORATION. ALL RIGHTS RESERVED.

PART NUMBER	REV	TERMINATOR	FEED TYPE	DESCRIPTION
1528748-1	A	LEADMAKER	MECH POST FEED	CUTS CARRIER
1528748-2	A	BENCH	MECH PRE FEED	CUTS CARRIER
1528748-6	A	LEADMAKER	MECH POST FEED	CONTINUOUS CARRIER
7-1528748-1	A	LEADMAKER	MECH POST FEED	-1 AND SPARE PARTS
7-1528748-2	A	BENCH	MECH PRE FEED	-2 AND SPARE PARTS
7-1528748-6	A	LEADMAKER	MECH POST FEED	-6 AND SPARE PARTS
7-1528748-7	A	-	-	SPARE PARTS KIT

SET UP GAGE 458637-3

LOC	DIST
A	66

REVISIONS

P	LTR	DESCRIPTION	DATE	DWN	APVD
	A	SEE ECO-07-001305	17JAN2007	DP	MC

CRIMP DATA LEAR/GHW TERMINAL TYCO CRIMP SPECS [8]

TERMINAL NAME: 1.6mm CONTACT, RECEPTACLE, SEALED

CRIMP	SIZE	TYPE	RANGE
WIRE	2.29 [.090 IN]	F	0.75-1.50mm²
INSUL	3.56 [.140 IN]	O	3.00 [.118 IN] [5]

WIRE STRIP LENGTH 3.90-4.70 [.154-.185 IN]

APPL INSTRUCTIONS 408-8322 & 408-8490

TERMINAL - -
APPL SPEC - -

FEED 12.70 [.500 IN]

TERMINALS APPLIED

TYCO TERM PN	MANUF TERM PN	TYCO SEAL PN	MANUF SEAL PN
1949227-1	26037.201.179 [7]	1949110-1	14448.627.621
-	-	1949230-1	14458.627.610
-	-	964972-1	-
-	-	-	-

WIRE SIZE	CRIMP HEIGHT *	REF SETTING *
1.50mm²	1.53 ±0.05 [.060 ±.002 IN]	B7
1.00mm²	1.35 ±0.05 [.053 ±.002 IN]	C9
0.75mm²	1.25 ±0.05 [.049 ±.002 IN]	D7
-	-	-
-	-	-
-	-	-
-	-	-
-	-	-
-	-	-
-	-	-
-	-	-
-	-	-

[1] RECOMMENDED SPARE PARTS.

2. GREASE RAM, CAM, CAM FOLLOWER AND FEED ROD LIGHTLY.

[3] CERTAIN TERMINALS REQUIRE LUBRICATION. REFER TO THE APPLICATOR INSTRUCTION SHEET FOR MORE INFORMATION.

4. LUBRICATE DAILY PER THE APPLICATOR INSTRUCTION SHEET SUPPLIED WITH THE APPLICATOR.

[5] THIS APPLICATOR APPLIES TERMINAL WITH A SEAL. INSULATION DIA QUOTED IS OUTSIDE DIAMETER OF SEAL - [O/D OF TYCO SEAL 964972-1 IS 2.6MM] WIRE INSULATION DIA IS DEPENDENT ON SEAL BEING APPLIED. SEAL PN 1949110-1 INS. DIA RANGE IS 1.70-2.10 [.067-.083 IN] PN 1949230-1 INS. DIA RANGE IS 1.90-2.50 [.075-.098 IN]. SEAL PN 964972-1 INS DIA RANGE IS 1.9 - 2.1MM.

[6] APPLY TORQ-SEAL IN ALLEN SOCKET TO FILL HOLE AFTER FLAT HD HAS BEEN ADJUSTED TO CORRECT HEIGHT AT QUALIFICATION. APPLY #1-23419-5 LOC-TITE TO THREADS.

[7] EQUIVALENT SCHLEMMER GMBH PN IS 7814046.

[8] CRIMP DATA CALCULATED BY TYCO ELECTRONICS U.K. LTD.

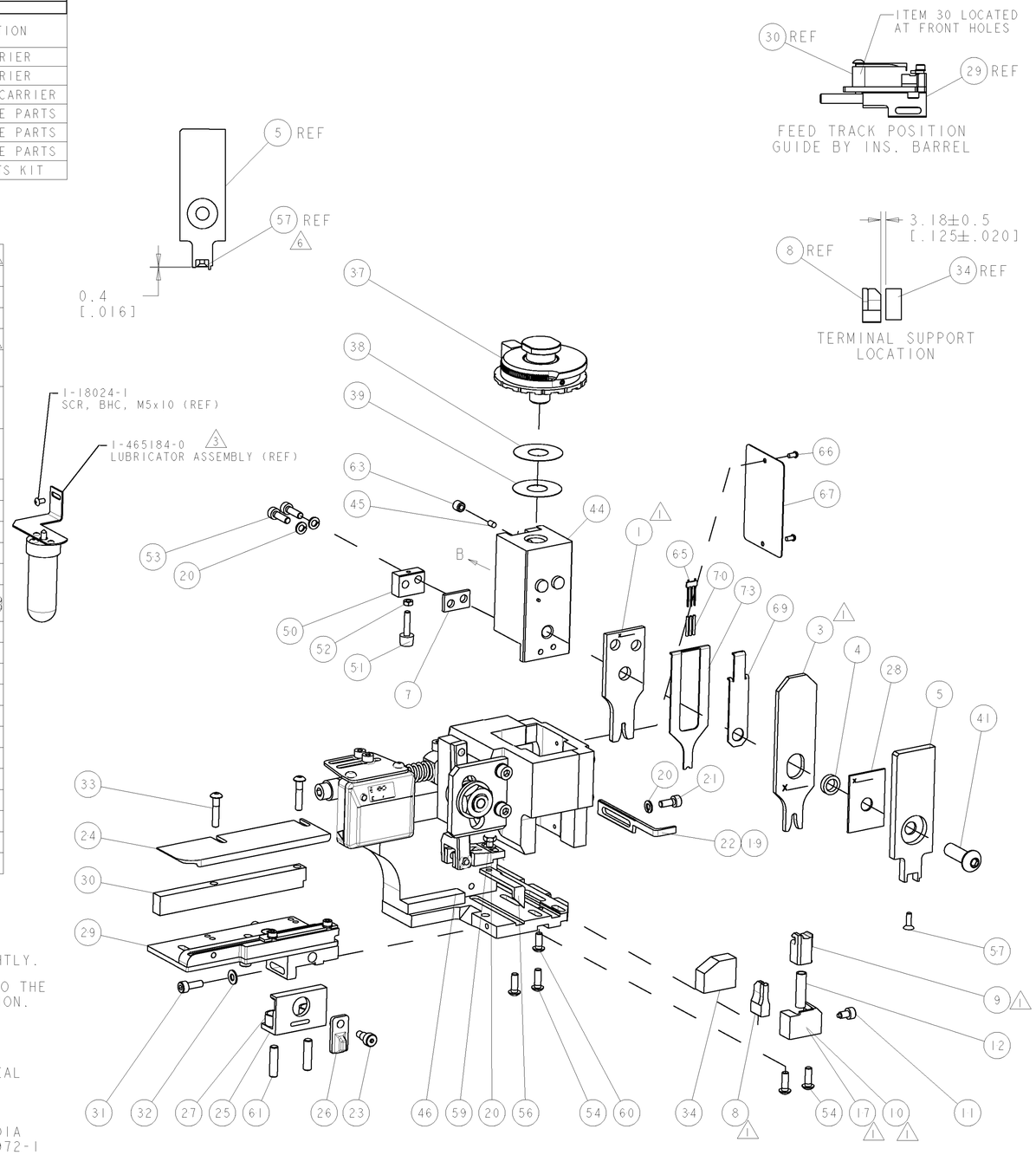

* WARNING
ON INSTALLATION, SET WIRE DISC TO LARGEST WIRE SIZE SETTING. USE OF SETTINGS BELOW MIN. REQUIRED CRIMP HEIGHT SETTING WILL CAUSE DAMAGE TO CRIMP TOOLING.

VIEW B ROTATED 180°

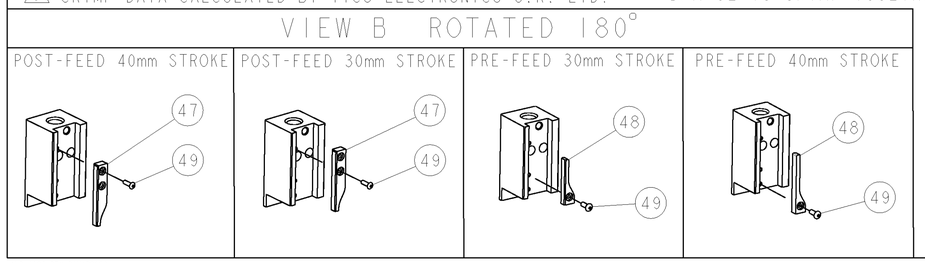

-77	-76	-72	-71	-6	-2	-1	PART NO	DESCRIPTION	ITEM NO
-	-	-	-	-	-	-	-	-	84
-	-	-	-	-	-	-	-	-	83
-	-	-	-	-	-	-	-	-	82
-	-	-	-	-	-	-	-	-	81
-	-	-	-	-	-	-	-	-	80
-	-	-	-	-	-	-	-	-	79
-	-	-	-	-	-	-	-	-	78
-	-	-	-	-	-	-	-	-	77
-	-	-	-	-	-	-	-	-	76
-	-	-	-	-	-	-	-	-	75
-	-	-	-	-	-	-	-	-	74
-77	-76	-72	-71	-6	-2	-1	PART NO	DESCRIPTION	ITEM NO

-77	-76	-72	-71	-6	-2	-1	PART NO	DESCRIPTION	ITEM NO
-	1	1	1	1	1	1	1490525-1	DEPRESSOR, WIRE	73
-	-	-	-	-	-	-	-	-	72
-	1	1	1	1	1	1	1338705-3	DOCUMENTATION PACKAGE	71
-	3	3	3	3	3	3	1-23147-4	SPRING, COMPRESSION	70
-	1	1	1	1	1	1	1490524-2	DEPRESSOR, SPACER	69
-	-	-	-	-	-	-	-	-	68
-	1	1	1	1	1	1	461264-5	PLATE, IDENTIFICATION	67
-	2	2	2	2	2	2	21017-2	SCREW, DRIVE	66
-	1	1	1	1	1	1	1424350-1	HOLDER, PIN, WIRED	65
-	-	-	-	-	-	-	-	-	64
-	1	1	1	1	1	1	3-18031-0	SCR, SET, CUP POINT M6 X 6.0	63
-	-	-	-	-	-	-	-	-	62
-	2	2	2	2	2	2	2-18032-5	SCR, SET, FLT POINT M5 X 20.0	61
-	1	1	1	1	1	1	18024-7	SCR, BTN SKT HD CAP (M4 X 10.0)	60
-	1	1	1	1	1	1	5-18022-2	SCR, HEX HD CAP M4 X 8.0	59
-	-	-	-	-	-	-	-	-	58
-	1	1	1	1	1	1	985575-3	SCR, FLT SKT HD CAP M3 X 10.0	57
-	1	1	1	1	1	1	1338685-1	PAWL, FEED	56
-	-	-	-	-	-	-	-	-	55
-	4	4	4	4	4	4	18024-8	SCR, BTN SKT HD CAP (M4 X 12.0)	54
-	2	2	2	2	2	2	9-18023-6	SCR, SKT HD CAP M4 X 14.0	53
-	1	1	1	1	1	1	18030-1	NUT, HEX, REG M3	52
-	1	1	1	1	1	1	811242-5	BUMPER, HOLD DOWN	51
-	1	1	1	1	1	1	690753-2	SPACER, TONKER	50
-	1	1	1	1	1	1	18024-3	SCR, BTN SKT HD CAP (M3 X 10.0)	49
-	-	1	-	-	1	-	1338675-1	CAM, UNIVERSAL PRE FEED	48
-	1	-	1	1	-	1	1338676-1	CAM, UNIVERSAL POST-FEED	47
-	1	1	1	1	1	1	1320999-3	APPLICATOR SUBASSEMBLY, HDI	46
-	1	1	1	1	1	1	690191-1	PLUG,NYLON	45
-	1	1	1	1	1	1	1338660-1	RAM	44
-	-	-	-	-	-	-	-	-	43
-	-	-	-	-	-	-	-	-	42
-	1	1	1	1	1	1	2-18024-6	SCR, BTN SKT HD CAP (M8 X 25.0)	41
-	-	-	-	-	-	-	-	-	40
-	1	1	1	1	1	1	690125-1	SHIM SUB-ASSY	39
-	1	1	1	1	1	1	469367-1	SHIM	38
-	1	1	1	1	1	1	879103-2	FINE ADJUST HEAD ASSEMBLY	37
-	-	-	-	-	-	-	-	-	36
-	-	-	-	-	-	-	-	-	35
-	1	1	1	1	1	1	1320934-1	SUPPORT, TERMINAL	34
-	2	2	2	2	2	2	1-18024-0	SCR, BTN SKT HD CAP (M4 X 20.0)	33
-	1	1	1	1	1	1	18027-2	WASHER, FLAT, REG M4	32
-	1	1	1	1	1	1	1-18023-2	SCR, SKT HD CAP M4 X 12.0	31
-	1	1	1	1	1	1	1320908-1	SPACER, STRIP GUIDE	30
-	1	1	1	1	1	1	1633073-2	STRIP GUIDE ASSEMBLY	29
-	1	1	1	1	1	1	1-455888-0	SPACER, CRIMPER	28
-	2	2	2	2	2	2	1-22284-0	SPRING, COMPRESSION	27
-	1	1	1	1	1	1	356835-1	LEVER, DRAG RELEASE	26
-	1	1	1	1	1	1	240792-1	DRAG, TERMINAL	25
-	1	1	1	1	1	1	1320928-1	PLATE, STRIP GUIDE	24
-	1	1	1	1	1	1	980371-4	SCR, SKT HD SHLDR 5.0 DIA X 6.0	23
-	1	-	1	1	-	1	690472-2	STRIPPER	22
-	1	1	1	1	1	1	1-18023-1	SCR, SKT HD CAP M4 X 10.0	21
-	4	4	4	4	4	4	18025-2	WASHER, SPRG LOCK, REG M4	20
-	-	1	-	-	1	-	690472-1	STRIPPER	19
-	-	-	-	-	-	-	-	-	18
[1] -	1	-	-	1	-	-	1338684-2	SHEAR HOLDER, FRONT	17
-	-	-	-	-	-	-	-	-	16
-	-	-	-	-	-	-	-	-	15
-	-	-	-	-	-	-	-	-	14
-	-	-	-	-	-	-	-	-	13
-	1	1	1	1	1	1	3-22280-3	SPRING, COMPRESSION	12
-	1	1	1	1	1	1	356885-5	STOP, SHEAR	11
[1] -	-	1	1	-	1	1	1-1320921-0	SHEAR HOLDER, FRONT, CUT	10
[1] -	1	1	1	1	1	1	318707-1	FLOATING SHEAR, FRONT	9
[1] 1	2	2	2	1	1	1	1-1633132-5	ANVIL, COMBINATION .090	8
-	1	1	1	1	1	1	240641-9	SPACER	7
-	-	-	-	-	-	-	-	-	6
-	1	1	1	1	1	1	1338680-1	DEPRESSOR, SHEAR	5
-	1	1	1	1	1	1	238011-2	BLOCK, CRIMPER SPACER	4
[1] 1	2	2	2	1	1	1	456135-6	CRIMPER, INSULATION O PREMIUM	3
-	-	-	-	-	-	-			2
[1] 1	2	2	2	1	1	1	2-456406-2	CRIMPER, WIRE PREMIUM	1
-77	-76	-72	-71	-6	-2	-1	PART NO	DESCRIPTION	ITEM NO

THIS DRAWING IS A CONTROLLED DOCUMENT FOR TYCO ELECTRONICS CORPORATION. IT IS SUBJECT TO CHANGE AND THE CONTROLLING ENGINEERING ORGANIZATION SHOULD BE CONTACTED FOR THE LATEST REVISION.

DIMENSIONS: mm [IN]

TOLERANCES UNLESS OTHERWISE SPECIFIED:
0 PLC ±-
1 PLC ±-
2 PLC ±-
3 PLC ±-
4 PLC ±-
ANGLES ±-

MATERIAL - -
FINISH - -

DWN L.LOFTHOUSE 19DEC2006
CHK -
APVD M.CLIFFORD 19DEC2006
PRODUCT SPEC -
APPLICATION SPEC See Table
WEIGHT -

tyco Electronics
Tyco Electronics
Harrisburg, PA 17105-3608

NAME FINE ADJUST SIDE FEED HDI APPLICATOR -

SIZE	CAGE CODE	DRAWING NO	RESTRICTED TO
A1	00779	C-1528748	-

CUSTOMER DRAWING SCALE 3:5 SHEET 1 OF 1 REV A