REVISIONS						
REV	ECO NO.	DESCRIPTION	BY	DATE	APP'D BY	DATE
1		ORIGINAL RELEASE	JWJ	5/4/2003	RRR	5/4/2003
2	23573	UPDATED & REDRAWN	TonyD	6/28/2015		

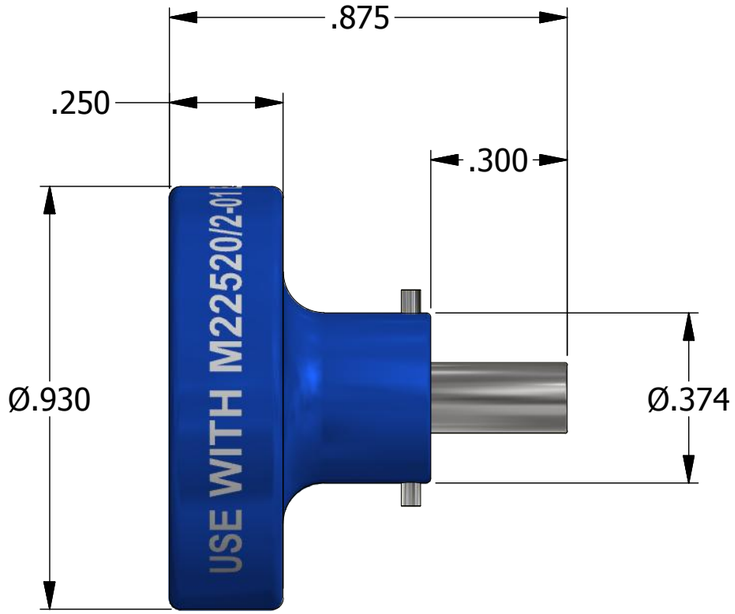

UNCONTROLLED DOCUMENT WILL NOT BE UPDATED

DIMENSIONS IN INCHES - UNLESS OTHERWISE SPECIFIED

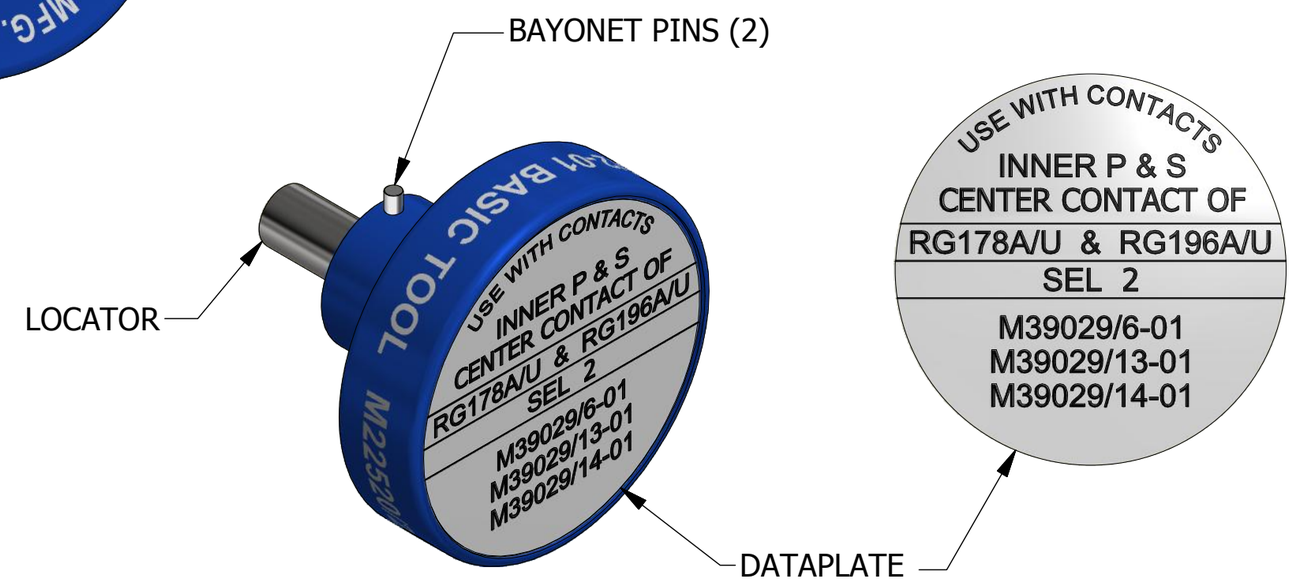

LOCATOR	
HOLE DIMENSIONS	ADDITIONAL FEATURES
Ø.067 ↧THRU	Ø.085 ↧.008

MATERIAL	ITEM	PART NO.	QTY.	DESCRIPTION / REMARKS
N/A				

DRN. J. JOYCE — DATE 5/4/2003
CHK'D. — DATE

DANIELS MANUFACTURING CORP.
ORLANDO, FLORIDA
CAGE 11851

RESTRICTED & CONFIDENTIAL

CONFIDENTIAL PROPERTY OF DANIELS MANUFACTURING CORP. NOT TO BE DISCLOSED TO OTHERS. REPRODUCTION OR USED FOR ANY OTHER PURPOSE EXCEPT AS AUTHORIZED IN WRITING BY DANIELS MANUFACTURING. MUST BE RETURNED TO DANIELS MANUFACTURING CORP. ON COMPLETION OF ORDER OR PURPOSES FOR WHICH LENT.

CREATED FROM AN INVENTOR MODEL.
CHANGES MUST BE REFLECTED IN THE 3D PART

DO NOT SCALE DRAWING

HEAT TREAT: N/A

FINISH: N/A

NOTE:
THIS DRAWING IS AN OUTLINE DRAWING OF THE RESPECTIVE DMC PART NUMBER INDICATED. ACTUAL DMC PART NUMBER IS CAD PART NUMBER WITHOUT THE "-ENV" SUFFIX

TITLE: POSITIONER (M22520/2-26) ENVELOPE DRAWING

WHERE USED: AFM8

SIZE	SCALE	CAD P/N	SHEET
B	3 : 1	K262-1-ENV	1 OF 1
		DWG. NO. K262-1	REV. 2