used for: D-SUB

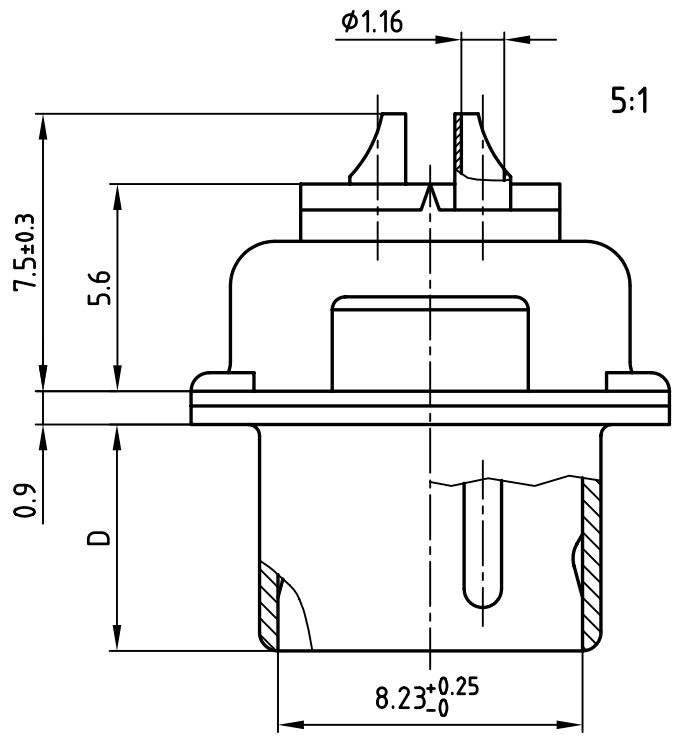

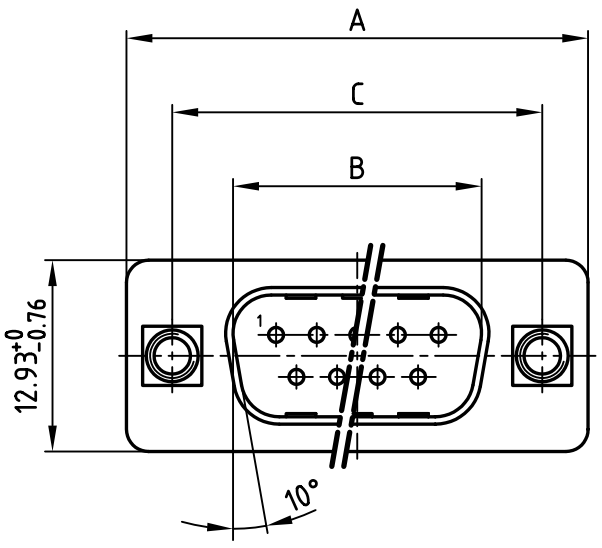

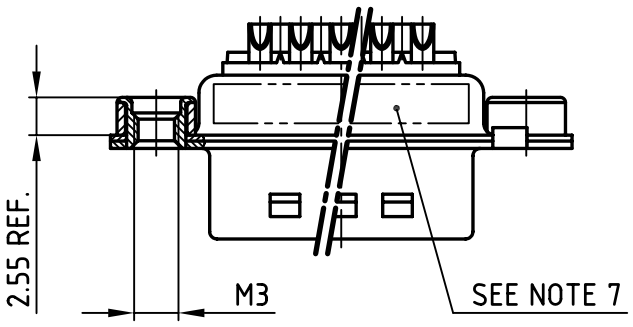

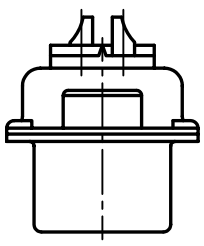

POS.	A −0.76	B +0.25	C	D −0.3	Part No.
9	31.19	16.79	25.00 +0.12 −0.13	6.12	**163A11319X**
~~15~~	~~39.52~~	~~25.42~~	~~33.30 +0.15 −0.1~~	~~6.12~~	~~**163A11329X**~~
25	53.42	38.84	47.04 ±0.13	5.99	**163A11339X**
37	69.70	55.30	63.50 ±0.13	5.99	**163A11349X**

16K1A3716

Directive 2002/95/EC „RoHS" Compliant

NOTES:

1. METALSHELLS: STEEL; min. 320µ" TIN
2. INSULATORS: PBT GF UL 94 V-0, BLACK
3. CONTACTS: COPPER ALLOY
   PLATING: 8µ" HARD GOLD OVER min. 50µ" NICKEL
   SOLDER CUP ACCEPTS CABLE AWG 20
4. THREADED INSERT: COPPER ALLOY; min. 200µ" TIN over 80µ" NICKEL
5. COLLAR: COPPER ALLOY; min. 200µ" TIN over 80µ" NICKEL
6. MAXIMUM TORQUE VALUE FOR THREAD: 6" LBS
7. CONNECTOR IS PART MARKED: PART-NO. CONEC ABC

APPROVAL # FREIGABE # DEBLOCAGE # AUTOR/ZACION # APPROVAL

CUSTOMER APPROVAL DATE:

NAME: TITLE:

COMPANY NAME:

THIS DRAWING MAY NOT BE COPIED OR REPRODUCED IN ANY WAY, AND MAY NOT BE PASSED ON TO A THIRD PARTY WITHOUT WRITTEN PERMISSION. OWNERSHIP AND COPYRIGHT OF CONEC GmbH

DO NOT ALTER CAD DRAWING BY HAND

rev.	description	date	name

tolerance — dim. in mm

2003	date	name
drawn	25.08.	Lehmenkühler
appd.	25.08.	Mickenbecker
norm	DIN 41652	
d-old		

CONEC®

scale: 2:1 (5:1)
material: SEE NOTES

title: D-SUB MALE
9-37pos. SOLDER CUP
with threaded insert

dwg no: 16K1A1005
AutoCAD 2000
DIN-A 3
sh: 1/1

part no: SEE TABLE