THIS DRAWING IS UNPUBLISHED. RELEASED FOR PUBLICATION 20
© COPYRIGHT 20 BY - ALL RIGHTS RESERVED.

REVISIONS					
P	LTR	DESCRIPTION	DATE	DWN	APVD
	G1	REVISED PER ECR-16-011494	21JUN2017	NK	CX

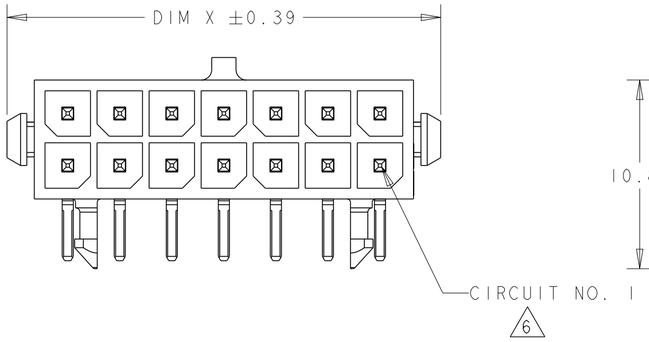

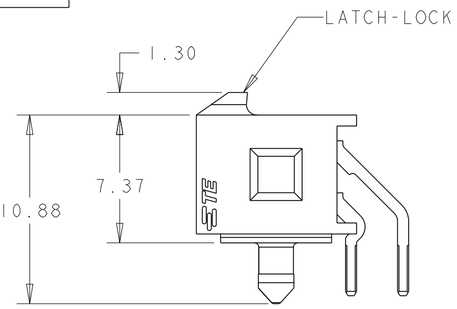

UNREEL DIRECTION OF REVERSE TAPED

1. MATERIAL;
   CONTACTS - BRASS.
   UL 94V-0 RATED HIGH TEMP NYLON, COLOR; BLACK.
2. PLATING;
   CONTACTS - 0.76µm MINIMUM GOLD OVER 2.54µm MINIMUM NICKEL ON MATING AREA.
   2.54µm TIN-LEAD MINIMUM OVER 2.54µm NICKEL MINIMUM ON SOLDER TAILS.
4. RECOMMENDED PC BOARD THICKNESS OF 1.57.
5. PLATING;
   CONTACTS - 0.76µm MINIMUM GOLD OVER 2.54µm MINIMUM NICKEL ON MATING AREA.
   2.54µm MATTE TIN MINIMUM OVER 2.54µm NICKEL MINIMUM ON SOLDER TAILS.
6. CIRCUIT NUMBER 1 IS LOCATED AT THE BOTTOM RIGHT WITH THE LATCH-LOCK ON TOP LOOKING INTO THE CAVITIES

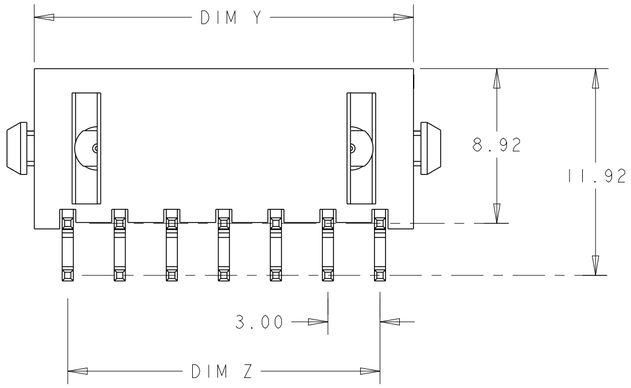

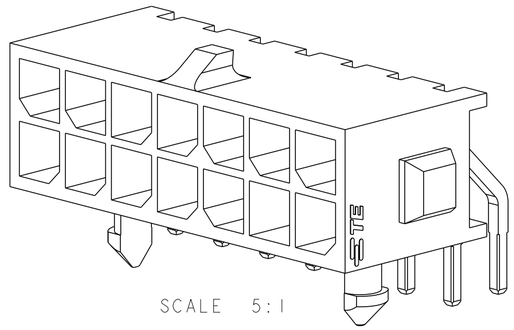

SCALE 5:1

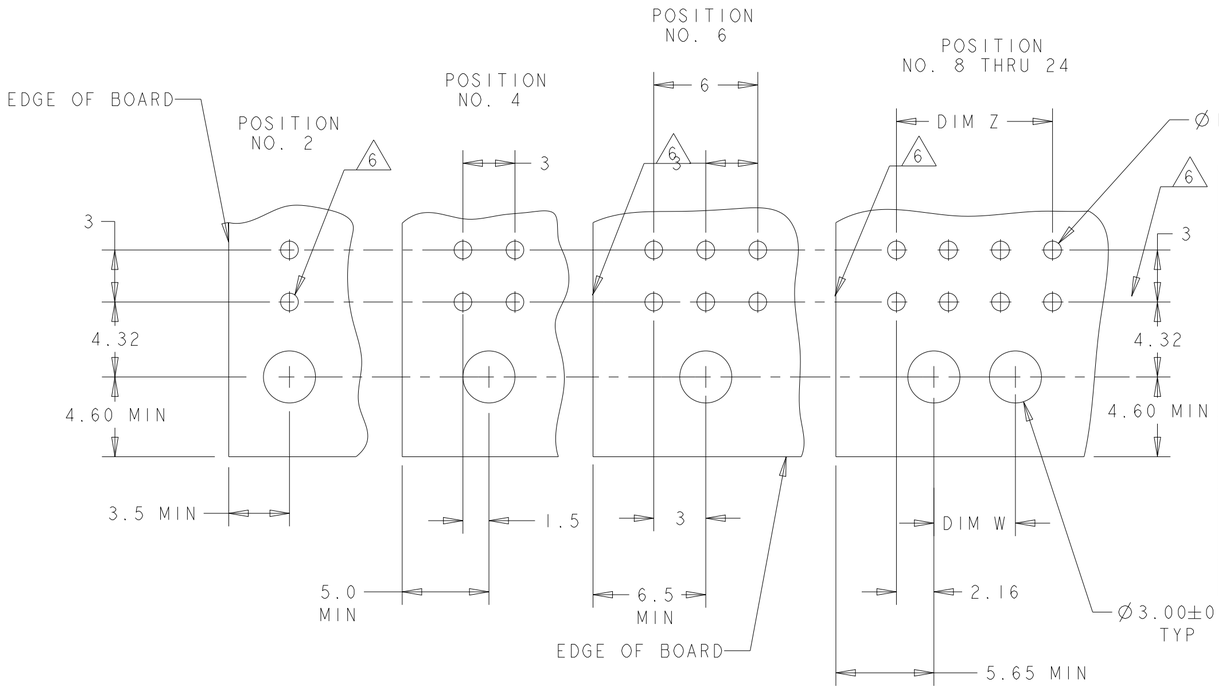

RECOMMENDED PCB LAYOUT 4
(COMPONENT SIDE)

REVERSE TAPED	5	18.86	10.70	15.00	22.00	12	7-794620-2
TRAY	5	36.86	28.70	33.00	40.00	24	5-794620-4
TRAY	5	33.86	25.70	30.00	37.00	22	5-794620-2
TRAY	5	30.86	22.70	27.00	34.00	20	5-794620-0
TRAY	5	27.86	19.70	24.00	31.00	18	4-794620-8
TRAY	5	24.86	16.70	21.00	28.00	16	4-794620-6
TRAY	5	21.86	13.70	18.00	25.00	14	4-794620-4
TRAY	5	18.86	10.70	15.00	22.00	12	4-794620-2
TRAY	5	15.86	7.70	12.00	19.00	10	4-794620-0
TRAY	5	12.86	4.70	9.00	16.00	8	3-794620-8
TRAY	5	9.86	-	6.00	13.00	6	3-794620-6
TRAY	5	6.86	-	3.00	10.00	4	3-794620-4
TRAY	5	3.86	-	-	7.00	2	3-794620-2
SUPERSEDED BY 5-794620-4	TRAY	2	36.86	28.70	33.00	40.00	24	~~2-794620-4~~
SUPERSEDED BY 5-794620-2	TRAY	2	33.86	25.70	30.00	37.00	22	~~2-794620-2~~
SUPERSEDED BY 5-794620-0	TRAY	2	30.86	22.70	27.00	34.00	20	~~2-794620-0~~
SUPERSEDED BY 4-794620-8	TRAY	2	27.86	19.70	24.00	31.00	18	~~1-794620-8~~
SUPERSEDED BY 4-794620-6	TRAY	2	24.86	16.70	21.00	28.00	16	~~1-794620-6~~
SUPERSEDED BY 4-794620-4	TRAY	2	21.86	13.70	18.00	25.00	14	~~1-794620-4~~
SUPERSEDED BY 4-794620-2	TRAY	2	18.86	10.70	15.00	22.00	12	~~1-794620-2~~
SUPERSEDED BY 4-794620-0	TRAY	2	15.86	7.70	12.00	19.00	10	~~1-794620-0~~
SUPERSEDED BY 3-794620-8	TRAY	2	12.86	4.70	9.00	16.00	8	~~794620-8~~
SUPERSEDED BY 3-794620-6	TRAY	2	9.86	-	6.00	13.00	6	~~794620-6~~
SUPERSEDED BY 3-794620-4	TRAY	2	6.86	-	3.00	10.00	4	~~794620-4~~
SUPERSEDED BY 3-794620-2	TRAY	2	3.86	-	-	7.00	2	~~794620-2~~
	PACKAGE	FINISH	DIM Y	DIM W	DIM Z	DIM X	NO. OF POSN.	PART NUMBER

794620

THIS DRAWING IS A CONTROLLED DOCUMENT.

DIMENSIONS: mm

TOLERANCES UNLESS OTHERWISE SPECIFIED:
0 PLC ±--
1 PLC ±-
2 PLC ±0.13
3 PLC ±-
4 PLC ±-
ANGLES ±-

MATERIAL 1

FINISH SEE TABLE

DWN B. HAYMAKER 12AUG99
CHK K. COBLE 12AUG99
APVD K. COBLE 12AUG99
PRODUCT SPEC -
APPLICATION SPEC -
WEIGHT -

TE Connectivity

NAME THRU-HOLE, R/A, 30 GOLD HEADER, PLASTIC BOARDLOCK, DUAL ROW, MICRO MATE-N-LOK™

SIZE A2 | CAGE CODE 00779 | DRAWING NO C-794620 | RESTRICTED TO -

CUSTOMER DRAWING | SCALE 4:1 | SHEET 1 OF 1 | REV G1

1471-9 (3/13)