SIGN	DATE	DESCRIPTION	APPROVER
1	01/26'07	The Soldering temperature from 245° to 250°	Aaron
2	01/26'07	Add "VDE" stipulation	Aaron
3	9/16'08	Add "CQC" Safety Approval Logo	Tony
4	9/16'08	Wire strip length changed from 6-7mm to 9-10mm	Tony
5	9/16'08	Operating temperature changed (-40°C to +115°C)	Tony
6	2/9'09	Add "TUV" Safety Approval	Tony
7	4/27'10	Electrical and Structure changed	Runner
8	6/02'10	Structure changed	Cheng Bo
9	12/25'10	How to order is changed	Runner
THIS IS CAD DRAWING, DO NOT REVISE MANUALLY!!!			

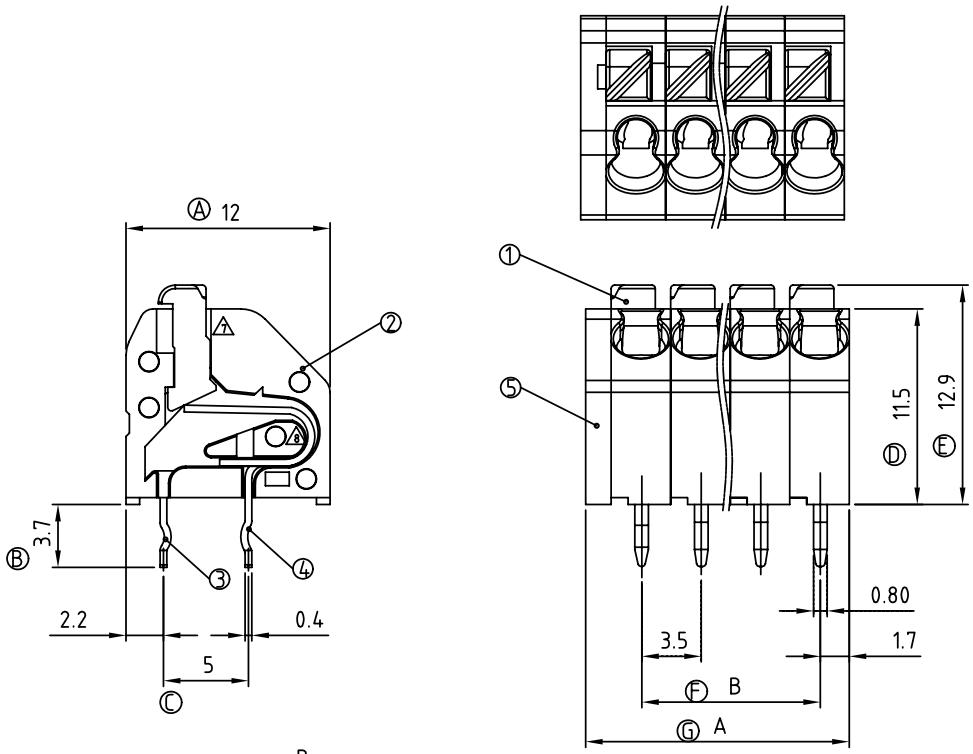

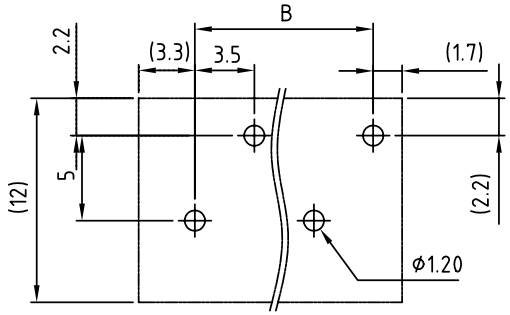

P.C.B Layout

Material:

- Item ① Insulator(lever): Thermoplastic (UL94V-0)
- Item ② Insulator(housing): Thermoplastic (UL94V-0)
- Item ③ Side contact pin: PhBz.Tin plated.
- Item ④ Center contact pin: PhBz.Tin plated.
- Item ⑤ Side Cover : Thermoplastic (UL94V-0)

Electrical:	cULus	VDE	CQC	TUV
Voltage rating:	300V	130V	300V	500V
Current rating:	6A	6A	6A	8A
Wire range:	0.5-0.75 mm²			0.5-1.5 mm²
Solid wire(AWG):	16-22		20	
Stranded wire(AWG):	16-22		20	
Wire strip length:	8.5-10.0mm			
Withstanding Voltage:	1.6KV	1.25KV	2.5 KV	4KV
Operating temperature:	-40°C to +115°C			
Soldering temperature:	250°C ±10°C/5 Sec			
Safety Approval:				

HC xx 00 x 0 xxxx G

No. OF POLES
02: 2 POLES
:
24: 24 POLES

COLOR
0: BLACK
5: GREEN
6: BLUE
8: GREY

0000: Standard
Any special item by customer requst. please contact sales department.

POLE		2	3	4	5	6	7	8	9	10	11	12
A		8.50	12.00	15.50	19.00	22.50	26.00	29.50	33.00	36.50	40.00	43.50
B		3.50	7.00	10.50	14.00	17.50	21.00	24.50	28.00	31.50	35.00	38.50
Tol.		±0.10					±0.15					
POLE	13	14	15	16	17	18	19	20	21	22	23	24
A	47.00	50.50	54.00	57.50	61.00	64.50	68.00	71.50	75.50	78.50	82.00	85.50
B	42.00	45.50	49.00	52.50	56.00	59.50	63.00	66.50	70.00	73.50	77.00	80.50
Tol.		±0.20					±0.30					

ANYTEK

CUSTOMER COPY

ALL RIGHTS RESERVED. REPRODUCTION OR ISSUE TO THIRD PARTIES IN ANY FORM WHATEVER IS NOT PERMITTED WITHOUT WRITTEN AUTHORITY FROM THE PROPRIETOR. PROPERTY OF ANYTEK TECHNOLOGY CO., LTD

TITLE	HC 3.5 mm Series (Double row center contact link together with end cover)					
PART NO.	HCxx00x0xxxxG			DWG NO.	8HC0002	
APPROVED	CHECKED	DESIGNED	DRAWN	CUST NO.		Tolerance
		Runner 2010.12.25	Cheng Bo 2010.06.02		UNIT: mm	X. ±0.50
					SCALE: NONE	X.X ±0.30
				SHEET: 01/01	REV.: K	X.XX ±0.10
						X° ±1°