REV.	DATE	ECR.NO	DESCRIPTION
A	06/05/03	--	UPDATE DRAWING FORMAT
B	11/18/03	--	MODIFY MOUNTING POST
C	02/01/10	2012	HARDWARES REMOVED

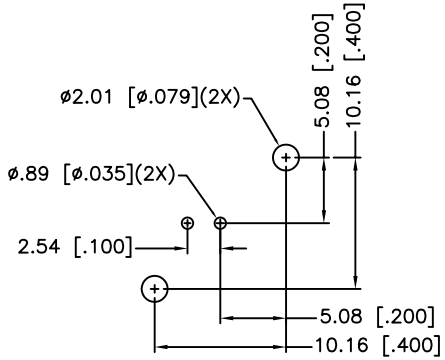

PCB MOUNTING HOLES

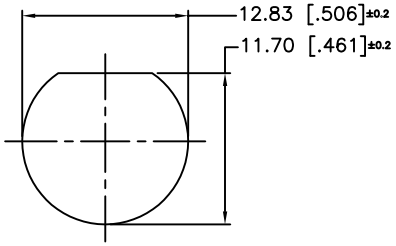

RECOMMENDED MOUNTING HOLE

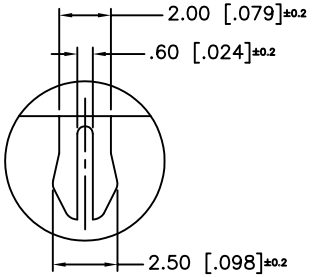

DETAIL –A–
(2X SCALE)

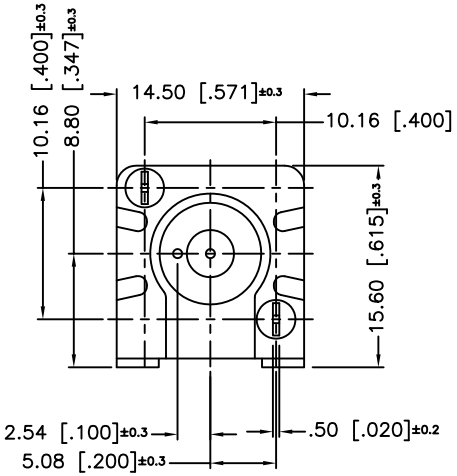

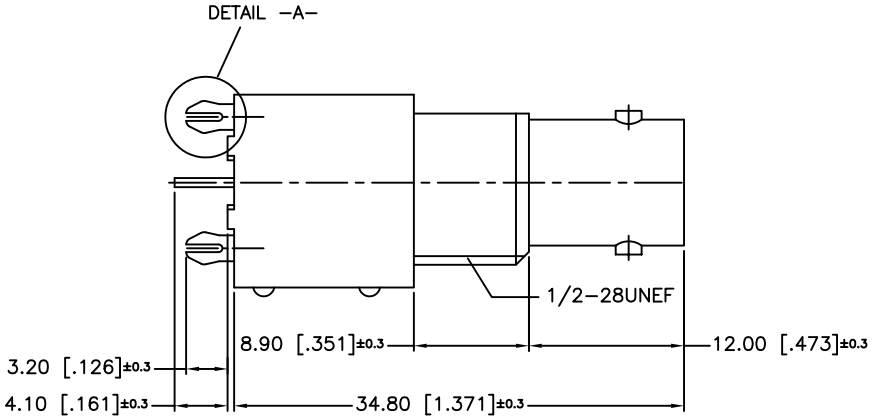

NOTE:
1. MAX. PANEL THICKNESS = 5mm

5	MOUNTING POST	BRASS	NICKEL	1
4	CONTACT PIN	PHOS. BRONZE	GOLD	1
3	INSULATOR	P.P.	NATURAL	1
2	BODY	ZINC DIECAST	NICKEL	1
1	HOUSING	P.P.	WHITE	1
	DESCRIPTION	MATERIAL	FINISH	QTY

UNLESS OTHERWISE SPECIFIED DIMENSIONS ARE IN MILLIMETERS. DIMENSIONS IN [ ] ARE IN INCHES AND FOR CUSTOMER REFERANCE ONLY.

UNLESS OTHERWISE SPECIFIED TOLERANCES FOR MILLIMETERS ARE:
0.5 – 8mm ± 0.20mm
8 – 30mm ± 0.40mm
30 – 120mm ± 0.50mm

UNLESS OTHERWISE SPECIFIED TOLERANCES FOR INCHES ARE:
.020 – .315 = ± 0.007"
.315 – 1.180 = ± 0.015"
1.180 – 4.724 = ± 0.020"

DO NOT SCALE DRAWING

APPROVALS		DATE
DRAWN	CLEMENT	02/01/2010
CHECKED		
ISSUED		
SHEET	1 OF 1	
CAD FILE	C:/112/112408.DWG	

Amphenol Connex

PART DESCRIPTION: BNC PCB MOUNT RECEPT. JACK

PART NO. 112408

DWG. NO. 112408.DWG | REV. C | SIZE A | SCALE NA