			APPROVER
1	11/08'05	Wire guard structure Modified	Tony
2	02/07'06	Part No. changed	Tony
3	2010.03.23	Add the 2p mark	Jacke

THIS IS CAD DRAWING, DO NOT REVISE MANUALLY!!!

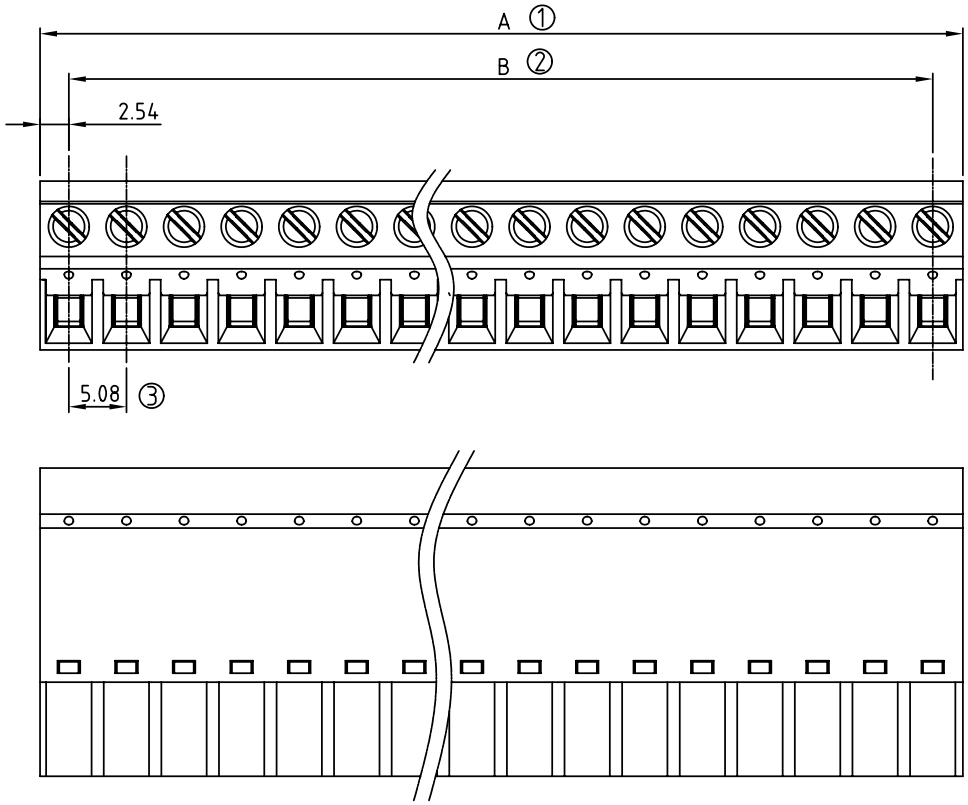

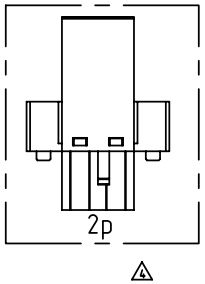

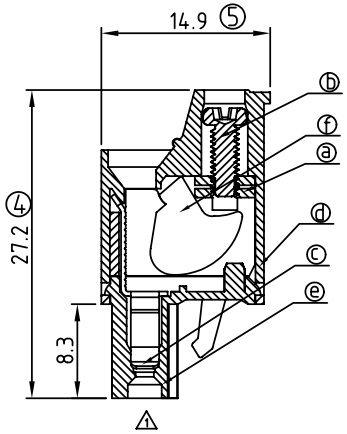

Material

- Item a Clamp: Steel zinc plated.
- Item b Terminal screw: Steel Zinc plating "-" slot type
- Item c Female contact: PhBz Tin plated
- Item d Terminal (Up body): Thermoplastic (UL94V-0)
- Item e Terminal (Down body): Thermoplastic (UL94V-0)
- Item f Clampcage:Steel Zinc plated

Electrical cULus

- Voltage rating: 300VAC
- Current rating: 20A
- Wire range: 0.34-2.5mm²
- Solid wire(AWG): 12-22
- Stranded wire(AWG): 12-22
- Torque: 3.5Lb-In
- Screw: M2.5
- Wire strip length: 6-7mm
- Withstanding Voltage: 1.6KV
- Operating temperature: -40°C to +115°C
- Safety approval: cULus

2 ● Part No.:

VM xx 5 5 x 1 xxxx G

POLES
02 pole
,,, ,,,
24 pole

Color
0 Black (RAL9005)
2 Red (RAL3001/D)
3 Orange(RAL2011/P)
4 Yellow(RAL1018/A)
5 Green(RAL6018/T)
6 Blue (RAL5015/A)
8 Grey(RAL7035/D)

G: Pb<40000ppm

0000: Standard
(Steel screw plating Cr^{3+})

000A: "ANYTEK" Mark
Any special item by customer requst. please contact sales department.

POLE		2	3	4	5	6	7	8	9	10	11	12
A		10.16	15.24	20.32	25.40	30.48	35.56	40.64	45.72	50.80	55.88	60.96
B		5.08	10.16	15.24	20.32	25.40	30.48	35.56	40.64	45.72	50.80	55.88
Tol.		±0.20					±0.25					
POLE	13	14	15	16	17	18	19	20	21	22	23	24
A	66.04	71.12	76.20	81.28	86.36	91.44	96.52	101.60	106.68	111.76	116.84	121.92
B	60.96	66.04	71.12	76.20	81.28	86.36	91.44	96.52	101.60	106.68	111.76	116.84
Tol.		±0.30					±0.40					

ANYTEK

CUSTOMER COPY

ALL RIGHTS RESERVED. REPRODUCTION OR ISSUE TO THIRD PARTIES IN ANY FORM WHATEVER IS NOT PERMITTED WITHOUT WRITTEN AUTHORITY FROM THE PROPRIETOR. PROPERTY OF ANYTEK TECHNOLOGY CO., LTD

TITLE	VM 5.08mm Low Profile Type W/O Flange Series					
PART NO.	VMxx55x1xxxxG			DWG NO.	8VM0302	
APPROVED	CHECKED	DESIGNED	DRAWN	CUST NO.		Tolerance
		Jacke 2010.03.23	Jacke 2010.03.23		UNIT: mm	X. ±0.50
					SCALE: NONE	X.X ±0.30
				SHEET: 01/01	REV.: C	X.XX ±0.10
						X° ±1°