RA-3100L REV. E

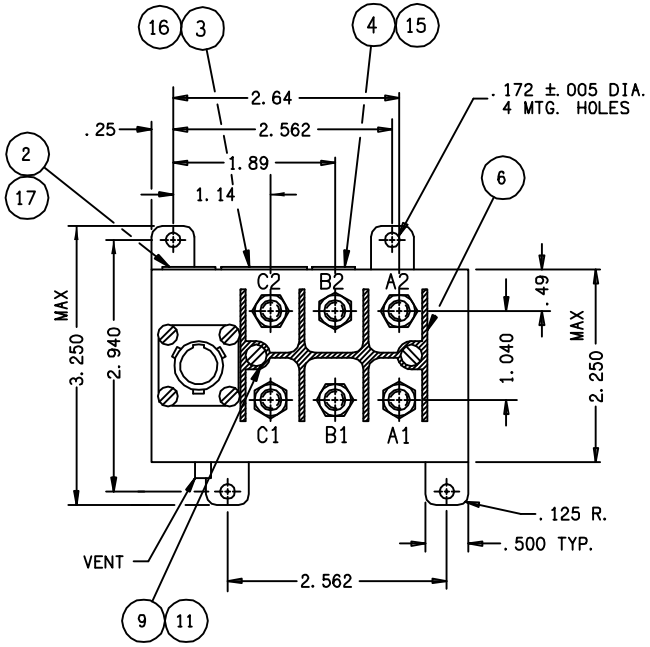

NOTE: FOR PROPER OPERATION, PIN A REQUIRES 18 TO 28 VDC

CONSTRUCTION	GASKET SEALED (VENTED)
MAIN CONTACTS	
CONFIGURATION	3PST SIDE STABLE
VOLTAGE (NOM.)	115/208 VAC 400 - 610 HZ
CURRENT RES:	50 AMP 50,000 CYCLES
MOTOR	50 AMP 50,000 CYCLES
RUPTURE	500 AMP
OPERATE TIMES:	
CLOSING	35 MS MAX. OVERRIDE AT 28 VDC
OPENING	25 MS MAX. OVERRIDE AT 28 VDC
BOUNCE	3 MS MAX.
AUXILIARY CONTACTS	
CONFIGURATION	SPDT
VOLTAGE	28 VDC 115 VAC 400 - 610 HZ
CURRENT: RES.	5 AMP
IND.	3 AMP
COIL DATA	
DUTY CYCLE	CONTINOUS ECONOMIZED
MIN. OPER. VOLTAGE	18VDC AT 85°C
MAX. OPER. VOLTAGE	32 VDC
RESISTANCE	PICKUP - 5.7 OHMS ± 10%
	HOLD - 72.0 OHMS ± 10%
ENVIRONMENTAL DATA	
OPERATE TEMP.	-55°C TO +85°C
VIBRATION: RANDOM	PER GR835AAU
SHOCK	50g MAX, 10-12 MS SAWTOOTH
ALTITUDE	60,000 FT. MAX
LIFE MECHANICAL	100,000 CYCLES MIN.
LIFE AT RATED LOAD	50,000 CYCLES MIN.
WEIGHT MAX.	1.55 LBS.

TRIP POINTS

CURRENT ±10%	TRIP TIME (SECONDS)
60 AMP	8.0 TO 10.0
150 AMP	4.0 TO 6.0
300 AMP	2.0 TO 3.0
500 AMP	0.07 TO 0.20

REVISIONS				RELEASED	
REV.		DESCRIPTION		DATE	APPROVED
A		UPDATED DRAWING		97/04/10	RS
B		RELEASED TO PRODUCTION		97/05/20	RS
C	33534	VIBRATION WAS SINE, LIFE AT RATED LOAD ADDED, "REF" GRUMMAN ADDED		97/08/22	RS
D	35074	TRIP PTS: 60 AMP WAS 75,300 AMP WAS 250, 4.0-6.0 WAS 1.2-2.0, 2.0-3.0 WAS 0.34-0.65		98/03/16	RS
E	08-027332	3.26 DIM. WAS 3.23		08/10/13	CB

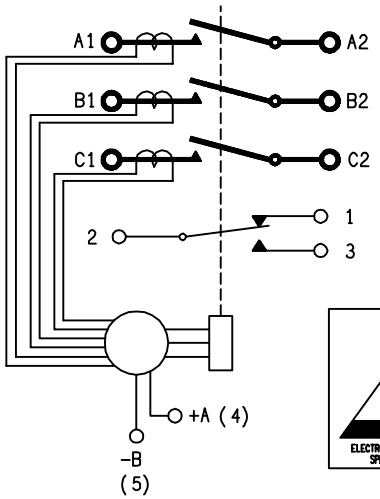

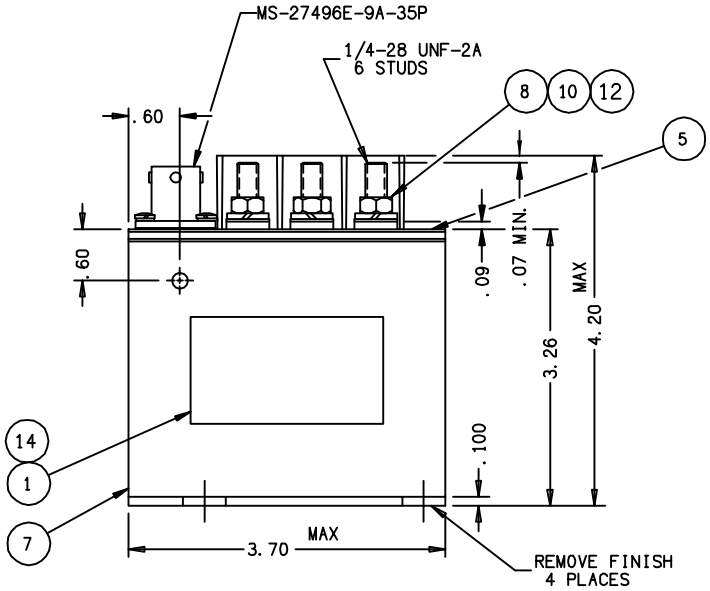

FIND NO	QTY REQD	PART OR IDENTIFYING NO	NOMENCLATURE OR DESCRIPTION	FSCM NO	DRAWING OR SPECIFICATION	MATERIAL OR NOTE
17	1	39529-024	OVERLAY			
16	1	39529-009	OVERLAY			
15	1	39529-007	OVERLAY			
14	1	39529-001	OVERLAY			
13						
12	6	51807-034	WASHER - LOCK, NO. 1/4, SPLIT			BRONZE
11	2	51804-010	WASHER - LOCK, NO. 4, SPLIT			BRONZE
10	6	51703-064	WASHER - FLAT 1/2 X 17/64 X .032			BRASS
9	2	51204-960	SCREW 4-40 X 7/8 RD. HD.			BRASS
8	6	50407-074	NUT 1-4-28 X 3/8 X 3/16 HEX			BRASS
7	1	43154-050	CONTACTOR ASSEMBLY - PRI.			
6	1	42726-001	SHIELD - TERMINAL			
5	1	42912-001	PLATE - BASE COVER			
4	1	41211-001	PLATE - WARNING			
3	1	42913-002	PLATE - WIRING DIAGRAM			
2	1	25695-001	PLATE - WARNING			
1	1	16043-001	PLATE - NAME			

REF.
GRUMMAN
GR835 AAU

UNLESS OTHERWISE SPECIFIED DIMENSIONS ARE IN INCHES TOLERANCES ON

2 PL DEC.	3 PL DEC.	ANGLES
±.06	±.010	±1°

DR BY	EAD	97/05/20
CHK BY	RS	97/05/20
ENGR	EAD	97/05/21
MFG	JH	97/05/21

SIZE C — CODE IDENT 74063 — SCALE NONE — SHEET

Tyco Electronics
Hartman™ Division, 175 N. DIAMOND STREET MANSFIELD, OHIO 44902

REMOTE POWER CONTROLLER
115/208 VAC 3PST 50 AMP 093

DWG NO. RA-3100L

REF TE P/N 1616133-4