SYMBOL DEFINITION			MISSING NUMBERS
A DIMENSION WITHOUT AN INSPECTION REPORT SYMBOL (▭) DOES NOT REQUIRE INSPECTION. IT MAY BE CONTROLLED ON AN INDIVIDUAL COMPONENT DRAWING.	TOTAL NO. OF SYMBOLS ON DRAWING	15	11-12,
	LAST NO. USED	20	

DWG STATUS										
DATE	STG	REV	N/P	CHG	ZONE	REVISION HISTORY	AUTH	DR	APVD 1	APVD 2
02FE00	R	02	-	-		PD AND TQD - CREATED, PARTS - REVISED TO LATEST ESD STANDARDS	196720	JEB	JEB	ET
03AU01	R	02	AA	-		OPTIONAL CONSTRUCTION - UPATED PDM ATTRIBUTES	212487	TSH	TSH	ET
25MR03	R	03	-	-		MAT'L SPEC WAS R0061354 AND ADDED DELPHI LOGO NOTE & RECYCLING CODE NOTE	238856	RH	RH	ET
02JN03	R	03	AA	-		ADDED DIM AND REMOVED DIM	241912	RH	RH	ET

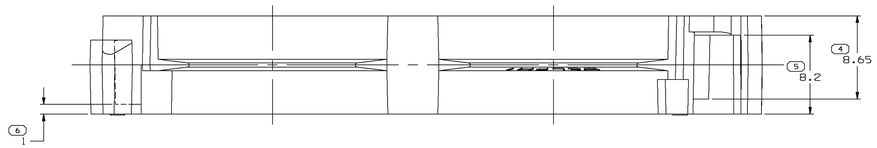

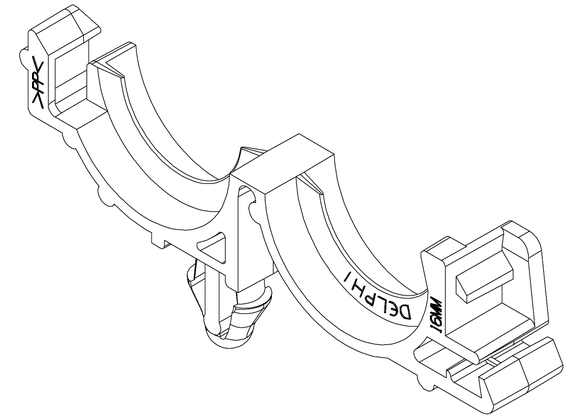

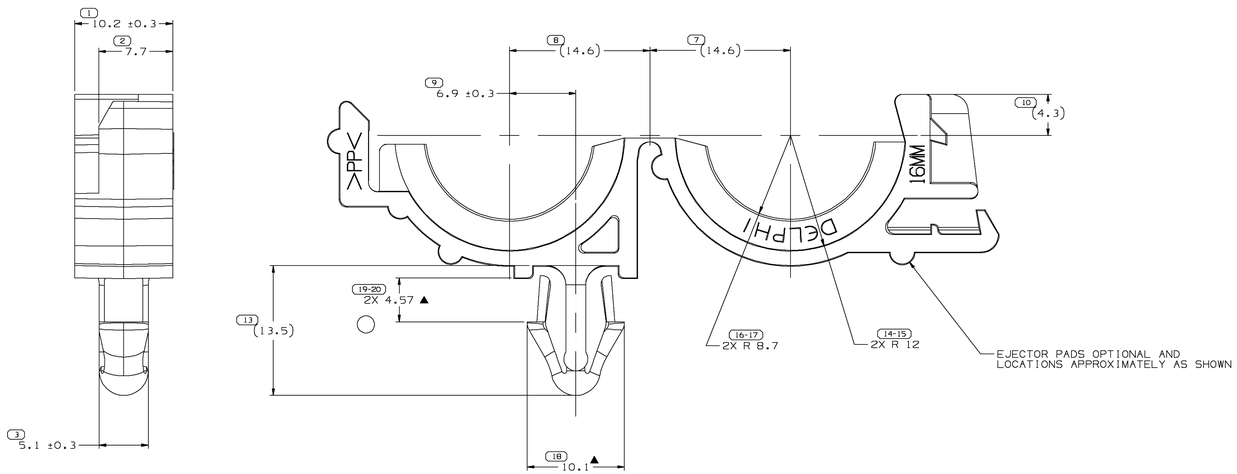

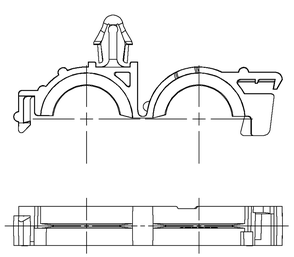

GATE OPTIONAL CONSTRUCTION
SCALE 2:1

NOTES:

1. UNLESS OTHERWISE SPECIFIED AND/OR INDICATED:
   DIMENSIONS ARE TO FACE OF VIEW SHOWN AND
   AUTOMATICALLY ROUNDED BY COMPUTER FOR INSPECTION.
   (SEE MATH MODEL FOR PRECISE DIMENSION)
   FOR ALL OTHER DIMENSIONS NOT SHOWN BUT REQUIRED FOR
   TOOL BUILD, SEE MATH MODEL FOR PRECISE TOOL PATH DATA.
   ALL RADII 0.8
   ALL DRAFT 1° WHERE REQUIRED
2. RECOMMENDED HOLE SIZE FOR CLIP Ø6.1-6.6 HOLE IN 3.81 MAX. THICK STOCK.
3. THIS PART TO FIT 15.9 ID (0.625") CONVOLUTED CONDUIT
4. DIMENSIONS MARKED WITH "▲" MAY VARY -0.6 DUE TO BOW
5. MATERIAL RECYCLING CODE >PP< PER SAE J1344. (1.5)X(0.1) RAISED CHARACTERS AS SHOWN TO BE LOCATED ON ANY EXTERIOR SURFACE. OPTIONAL CONSTRUCTION TO BE NO MATERIAL RECYCLING CODE.
6. (1.5)X(0.1) RAISED DELPHI CORPORATE BRAND TO BE LOCATED ON ANY EXTERIOR SURFACE, PREFERABLY VISIBLE AT FINAL ASSEMBLY. OPTIONAL CONSTRUCTION TO BE "PED" OR NO LOGO.

(1) PROCESS SENSITIVE DIMENSION

DIMENSIONS ENCLOSED IN ( ) INDICATE REFERENCE DIMENSIONS AND NO TOLERANCE LIMITS ARE ESTABLISHED.

DIMENSIONAL RANGE (MM)					CHART E
FROM	0	> 20	> 30	> 70	> 100
TO	20	30	70	100	
TOLERANCE UNLESS OTHERWISE SPECIFIED					
	±0.15	±0.21	±0.31	±0.41	±0.5

ANGULAR TOLERANCE ±2°

DWG TYPE: PART DRAWING

STYLE

VOLUME (CUF): 2.981

DISTR CODE

ROUTING: 6900 6901

UNLESS OTHERWISE SPECIFIED

THIS DOCUMENT IS IN ACCORDANCE WITH ASME Y14.5M-1994 AS AMENDED BY THE ISO GLOBAL DIMENSIONING AND TOLERANCING ADDENDUM - 1997. ALL GEOMETRIC TOLERANCES AND RELATED DATUMS APPLY RFS. RULE #1(PERFECT FORM AT MMC) DOES NOT APPLY WHEN RELATIONSHIP BETWEEN FEATURES IS ESTABLISHED BY ORIENTATION OR LOCATION TOLERANCES. FEATURES OF SIZE MUST ALSO BE GAGED SEPARATELY, REGARDLESS OF DATUM REFERENCE.

ALL DIMENSIONS ARE IN MILLIMETERS

REFERENCE

THIRD ANGLE PROJECTION

DO NOT SCALE

USE MATH DATA

UNIGRAPHICS

DELPHI

DELPHI PACKARD ELECTRIC SYSTEMS
WARREN,OH

		DATE
DW		
APVD1	W. STEIN	23OC74
APVD2	K. COPE	09DE74
APVD3	R. PLYLER	09DE74
APVD4		
APVD5		

SUBSTANCES OF CONCERN AND RECYCLED CONTENT PER DELPHI 10949001

MATERIAL: M2097001 PP IM BLK

DRAWING NAME: CLIP CNVLT CDT 16MM

DRAWING NUMBER: 08917728

SIZE	SCALE	FRAME NO	SHEET NO	STG	REV	N/P
A0	5:1	1 OF 1	1 OF 1	R	03	AA

Rev: J2R801 Part: 08917728-G0801-S01 Date: 02-Jun-03 Time: 14:07 Measure: