THIS DRAWING IS UNPUBLISHED. RELEASED FOR PUBLICATION -,- .
© COPYRIGHT - BY TYCO ELECTRONICS CORPORATION. ALL RIGHTS RESERVED.

LOC	DIST
GZ	00

REVISIONS

P	LTR	DESCRIPTION	DATE	DWN	APVD
	B	0611-0162-03	16MAY2003	TCS	KH

ALL LEADS 18AWG-UNLESS OTHERWISE SPECIFIED

PRIMARY

LEAD NO.	1	2	
VOLTAGE	COM	480	
COLOR	BLK	BLK/RED	
LENGTH	12.0	12.0	
STRIP LENGTH	.50	.50	

NOTES
1. DIMENSIONS FOR REFERENCE ONLY.
2. ALL LEADS +1"/-0" TOL.
3. STRIP TOL. ±1/32
4. WINDING PROTECTION- INHERENTLY LIMITING

CERTIFICATION:
UL, CUL FILE NO. E87824

SECONDARY

LEAD NO.	6	7	8	9
VOLTAGE	24	VAC		
COLOR	BLU	YEL		
LENGTH	12.0	12.0		
STRIP LENGTH	.50	.50		

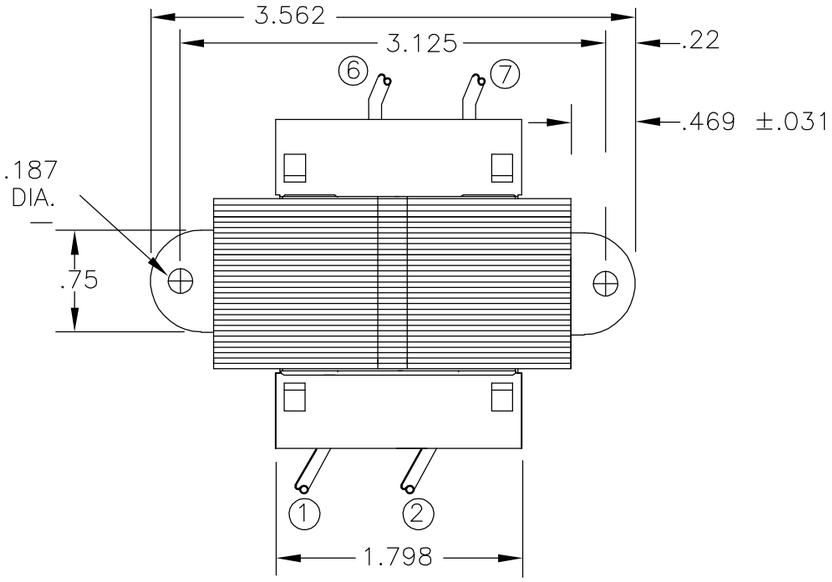

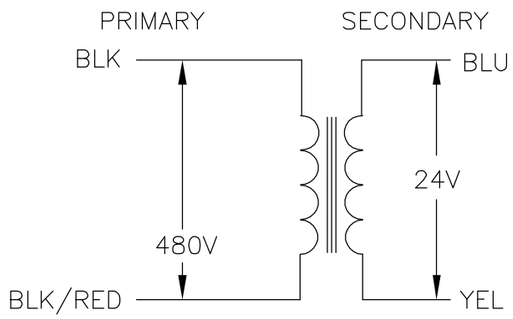

SCHEMATIC

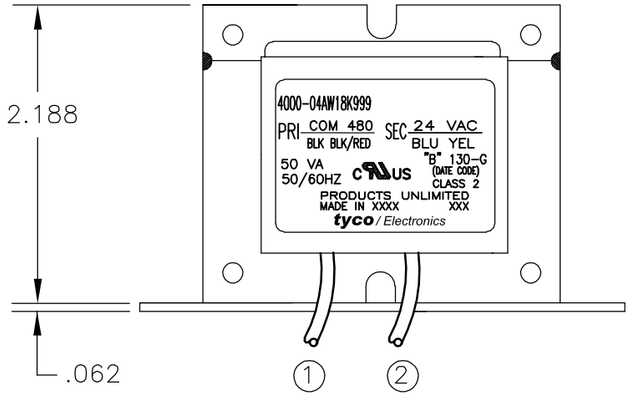

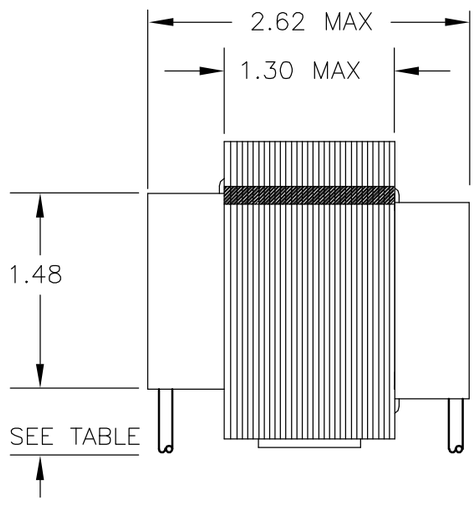

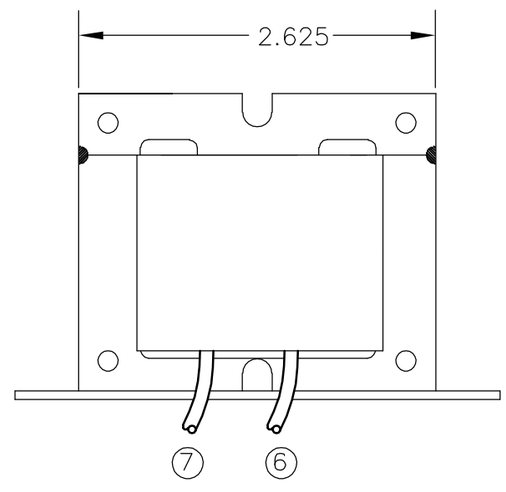

TYCO PART NUMBER
5-1611461-1

THIS DRAWING IS A CONTROLLED DOCUMENT.

DIMENSIONS: INCHES

TOLERANCES UNLESS OTHERWISE SPECIFIED:
0 PLC ± -
1 PLC ± -
2 PLC ± -
3 PLC ± -
4 PLC ± -
ANGLES ± -

MATERIAL -
FINISH -

DWN K.H. 02OCT1996
CHK -
APVD -
PRODUCT SPEC -
APPLICATION SPEC -
WEIGHT -

Products UNLIMITED
Tyco Electronics Corporation
Harrisburg, PA 17105-3608

NAME
TRANSFORMER OUTLINE

SIZE	CAGE CODE	DRAWING NO	RESTRICTED TO
A3	00779	C- 4000-04AW18K999	-

CUSTOMER DRAWING

SCALE NONE | SHEET 1 OF 1 | REV B

AMP 1470-19 REV 31MAR2000

N:\gprRR\Enginrng\Ron-Kirby\AutoCAD\PU\0611-0208-02\