THIS DRAWING IS UNPUBLISHED. RELEASED FOR PUBLICATION 2006
© COPYRIGHT 2006 BY - ALL RIGHTS RESERVED.

REVISIONS

P	LTR	DESCRIPTION	DATE	DWN	APVD
	A11	ECR-13-015411	11OCT2013	GSK	MKO
	A12	ECR-13-019172	18DEC2013	KR	MKO
	A13	ECR-14-012657	08SEP2014	RK	MKO
	A14	REVISED PER ECR-17-014013	03JAN2018	SRG	MKO

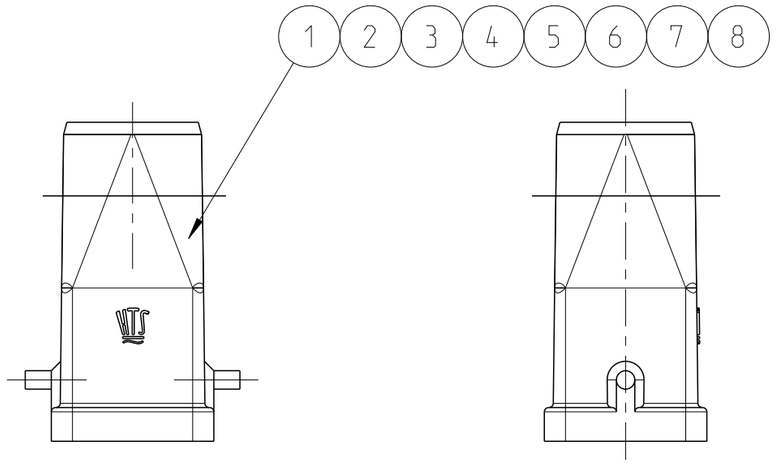

NOTES

1. MATERIAL: ZINC DIECAST
2. COLOR: - VARNISH GREY
   - VARNISH BLACK
   - METALLIC SILVER
3. VARNISH ON THE INSIDE NOT NECESARILY
4. SPECIAL PACKAGING
   PACKAGING QUANTITY 100 PIECES
5. PACKAGING QUANTITY 10 PIECES

0-9	0-8	0-7	0-6	0-5	0-4	0-3	0-2	0-1	DESCRIPTION	MATERIAL	SURFACE	COLOR	ITEM	NOTES
OBSOLETE		OBSOLETE	OBSOLETE						HOOD HA.3	ZINC DIECAST		BLACK	8	M20
	1								HOOD HA.3	ZINC DIECAST		WITHOUT VARNISH	7	M20
		1							HOOD HA.3	ZINC DIECAST	BLUE PASSIVATION	METALLIC SILVER	6	M20
			1						HOOD HA.3	ZINC DIECAST	BLUE PASSIVATION	BLACK	5	M16
				1					HOOD HA.3	ZINC DIECAST	BLUE PASSIVATION	WITHOUT VARNISH	4	M16
					1				HOOD HA.3	ZINC DIECAST		GREY	3	M20
						1			HOOD HA.3	ZINC DIECAST		BLACK	2	M16
							1		HOOD HA.3	ZINC DIECAST		GREY	1	M16
								1	HA.3.STO.1.M16.Z		5			
									HA-K.3.STO.1.M16.Z		5			
									HA.3.STO.1.M20.Z		5			
									HA.3.STO.1.M16.Z.KM		4			
									HA-EMV.3.STO.1.M16.Z		5			
									~~HA-EMV-K.3.STO.1.M16.Z~~		5			
									~~HA-EMV-K.3.STO.1.M20.Z~~		5			
									HA-EMV.3.STO.1.M20.Z		5			
									~~HA-K.3.STO.1.M20.Z~~		5			

THIS DRAWING IS A CONTROLLED DOCUMENT.

DIMENSIONS: mm

TOLERANCES UNLESS OTHERWISE SPECIFIED:
0 PLC ±-
1 PLC ±-
2 PLC ±-
3 PLC ±-
4 PLC ±-
ANGLES ±1°

MATERIAL -
-

FINISH -
-

DWN R.SCHNEIDER 09MAR2010
CHK T.SCHNURPFEIL 09MAR2010
APVD -
PRODUCT SPEC -
APPLICATION SPEC -
WEIGHT -

TE Connectivity

NAME HOOD ASSY HA.3
-

SIZE	CAGE CODE	DRAWING NO	RESTRICTED TO
A3	00779	C-1106405	-

CUSTOMER DRAWING

SCALE 5:1 SHEET 1 OF 1 REV A14