THIS DRAWING IS UNPUBLISHED. RELEASED FOR PUBLICATION 20
© COPYRIGHT 20 BY - ALL RIGHTS RESERVED.

REVISIONS

P	LTR	DESCRIPTION	DATE	DWN	APVD
	G1	REVISED PER ECR-16-011494	22JUN2017	NK	CX

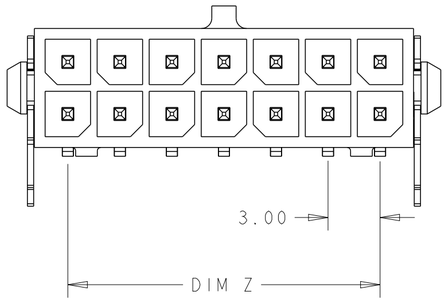

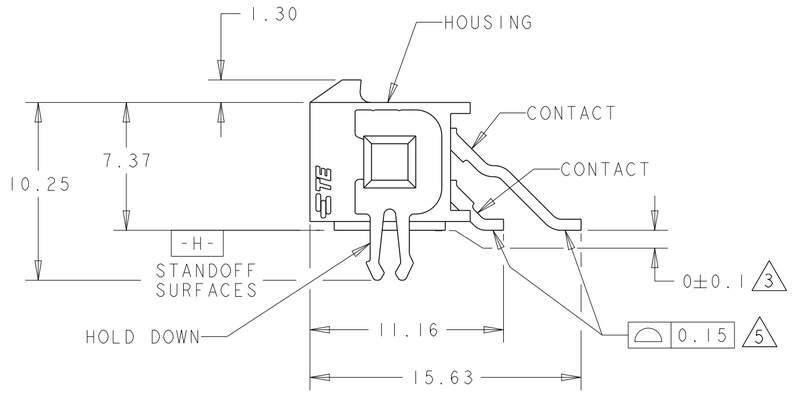

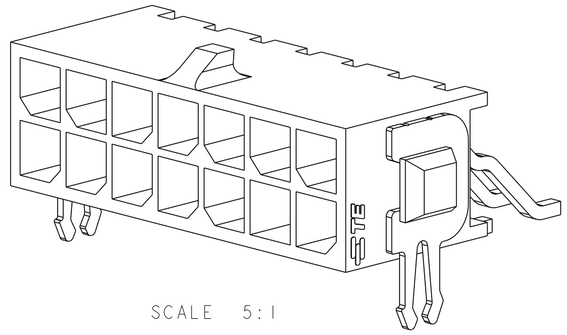

SCALE 5:1

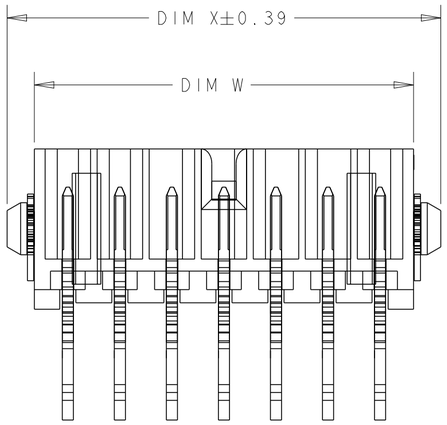

1. MATERIAL;
   CONTACTS - BRASS.
   HOUSING - UL 94V-0 RATED HIGH TEMP NYLON, COLOR; BLACK.
   HOLD DOWNS - PHOSPHOR BRONZE.
2. FINISH;
   CONTACTS - 2.54µm MINIMUM TIN-LEAD OVER 1.27µm MINIMUM NICKEL.
   HOLD DOWNS - 2.54µm TIN LEAD.
3. DIMENSION APPLIES TO SOLDERTAIL SURFACES AND STANDOFF SURFACES.
4. RECOMMENDED PC BOARD THICKNESS OF 1.57.
5. ALL SOLDERTAILS.
6. FINISH;
   CONTACTS - 2.54µm MINIMUM MATTE TIN OVER 1.27µm MINIMUM NICKEL.

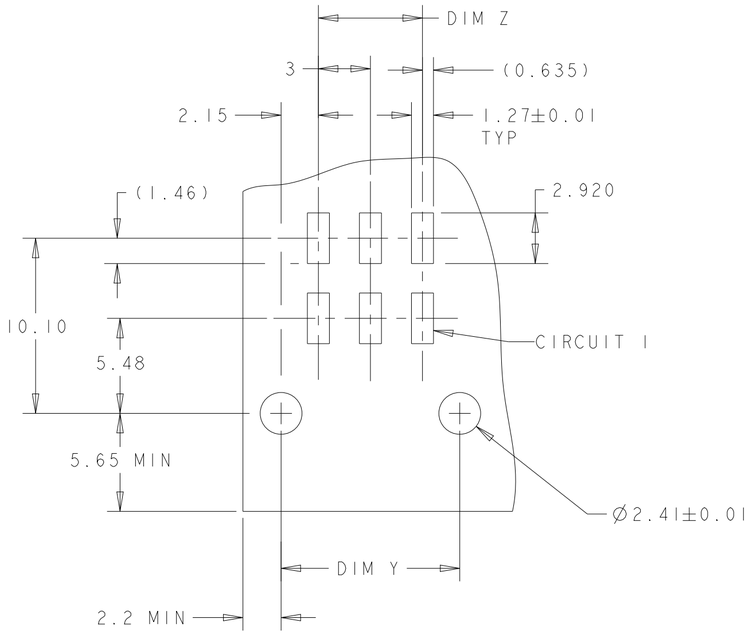

RECOMMENDED PCB LAYOUT (COMPONENT SIDE) 4

	FINISH	DIM W	DIM Y	DIM Z	DIM X	NO. OF POSN.	ASSEMBLY
	6	36.86	37.30	33.00	40.00	24	5-794624-4
		33.86	34.30	30.00	37.00	22	5-794624-2
		30.86	31.30	27.00	34.00	20	5-794624-0
		27.86	28.30	24.00	31.00	18	4-794624-8
		24.86	25.30	21.00	28.00	16	4-794624-6
		21.86	22.30	18.00	25.00	14	4-794624-4
		18.86	19.30	15.00	22.00	12	4-794624-2
		15.86	16.30	12.00	19.00	10	4-794624-0
		12.86	13.30	9.00	16.00	8	3-794624-8
		9.86	10.30	6.00	13.00	6	3-794624-6
		6.86	7.30	3.00	10.00	4	3-794624-4
		3.86	4.30	-	7.00	2	3-794624-2
SUPERSEDED BY 5-794624-4	2	36.86	37.30	33.00	40.00	24	~~2-794624-4~~
SUPERSEDED BY 5-794624-2		33.86	34.30	30.00	37.00	22	~~2-794624-2~~
SUPERSEDED BY 5-794624-0		30.86	31.30	27.00	34.00	20	~~2-794624-0~~
SUPERSEDED BY 4-794624-8		27.86	28.30	24.00	31.00	18	~~1-794624-8~~
SUPERSEDED BY 4-794624-6		24.86	25.30	21.00	28.00	16	~~1-794624-6~~
SUPERSEDED BY 4-794624-4		21.86	22.30	18.00	25.00	14	~~1-794624-4~~
SUPERSEDED BY 4-794624-2		18.86	19.30	15.00	22.00	12	~~1-794624-2~~
SUPERSEDED BY 4-794624-0		15.86	16.30	12.00	19.00	10	~~1-794624-0~~
SUPERSEDED BY 3-794624-8		12.86	13.30	9.00	16.00	8	~~794624-8~~
SUPERSEDED BY 3-794624-6		9.86	10.30	6.00	13.00	6	~~794624-6~~
SUPERSEDED BY 3-794624-4		6.86	7.30	3.00	10.00	4	~~794624-4~~
SUPERSEDED BY 3-794624-2		3.86	4.30	-	7.00	2	~~794624-2~~

794624

THIS DRAWING IS A CONTROLLED DOCUMENT.

DIMENSIONS: mm

TOLERANCES UNLESS OTHERWISE SPECIFIED:
0 PLC ±-
1 PLC ±-
2 PLC ±0.13
3 PLC ±-
4 PLC ±-
ANGLES ±-

MATERIAL 1

FINISH SEE TABLE

DWN S. HOOVER 23-MAR-2005
CHK C. JONES 23-MAR-2005
APVD C. JONES 23-MAR-2005
PRODUCT SPEC -
APPLICATION SPEC -
WEIGHT -

TE Connectivity

NAME SURFACE MOUNT, RIGHT ANGLE, MECH. HOLD DOWN, ASSEMBLY, TIN HEADER, DUAL ROW, MICRO MATE-N-LOK (TM)

SIZE A2 | CAGE CODE 00779 | DRAWING NO C-794624 | RESTRICTED TO -

CUSTOMER DRAWING | SCALE 4:1 | SHEET 1 OF 1 | REV G1

1471-9 (3/13)