Single IDC Contact 12-18 AWG

9177-500

AVX's STRIPT™, insulation displacement naked contact technology provides cost effective, insulator-less, wire-to-board connection for discrete wire applications. Designed from the ground up to function just like a traditional insulated connector, these UL certified contacts have been industry proven for many years. This 9177-500 series has been designed to support the larger wire gauges from a robustness and current rating perspective.

APPLICATIONS

- Industrial motor controls, drives & pumps
- Commercial building wiring and electrical systems
- Outdoor/Transportation lighting
- Solar and alternative energy

FEATURES AND BENEFITS

- Proven "gas tight" cold welded wire termination
- Redundant contact systems provides enhanced wire retention and high current carrying capabilities
- Cost effective STRIPT™ insulator-less contact system

ELECTRICAL

- Current Rating: 15
- Voltage Rating: 600 VAC

ENVIRONMENTAL

- Operating Temperature: -40ºC to +125ºC

MECHANICAL

- Contact Material: Phosphor Bronze
- Contact Plating: Pure tin over nickel
- Durability: 3 termination cycles

HOW TO ORDER

70 — **Prefix**
70 = Contact

9177 — **Series**

001 — **Number of Ways**
001 = 1

5XX — **Wire Gauge Size**
591 = 12AWG Stranded and Solid
501 = 14AWG Stranded and Solid
512 = 16AWG Stranded and Solid
522 = 18AWG Stranded and Solid

006 — **Plating Option**
006 = Pure Tin all over

RoHS COMPLIANT

Certification: UL File #E90723

CONTACT DETAILS

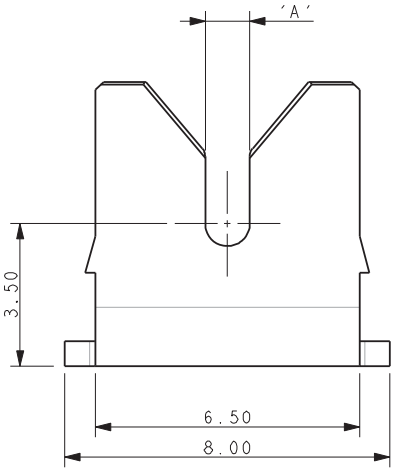

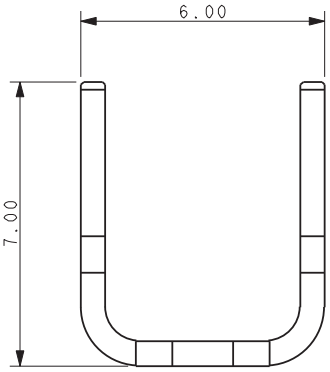

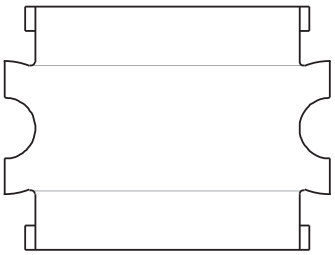

Code	Accepted Wire Gauge	A
591	12AWG Stranded and Solid	1.50
501	14AWG Stranded and Solid	1.10
512	16AWG Stranded and Solid	0.82
522	18AWG Stranded and Solid	0.72

NOTES:
1. CONNECTOR FO IDC WIRE TO BOARD CONNECTION.
2. CONTACT MATERIAL: PHOSPHORE BRONZE.
3. CONTACT PLATING: PURE TIN.
4. CONTACTS DESIGNED TO ACCEPT BETWEEN 12 AND 18 GAUGE STANDED WIRE, SEE TABLE.
5. ALL DIMENSIONS FOR REFERENCE UNLESS OTHERWISE STATED.
6. FOR FULL PRODUCT SPECIFICATIONS REFER TO AVX SPECIFICATION 201-01-208 AND APPLICATION NOTES 201-01-209.
7. SMT PCB LAYOUT, REFER TO PAGE 3.
8. PACKING IN TAPE AND REEL, QUANTITY PER REEL 700.
9. ASSEMBLY TOOLING ON PAGE 4.
10. UL REFERENCE E90723 (US AND CANADA).

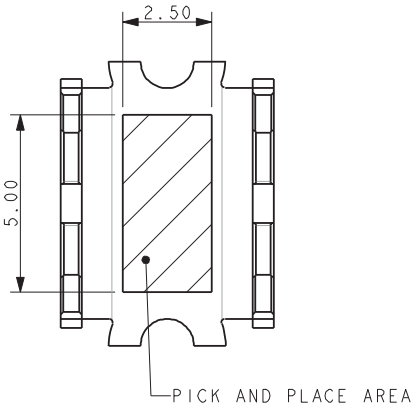

PACKING DETAILS

REEL QTY	700
LEADER	480MM
TRAILER	120MM

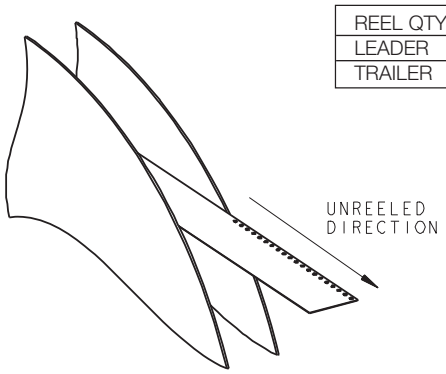

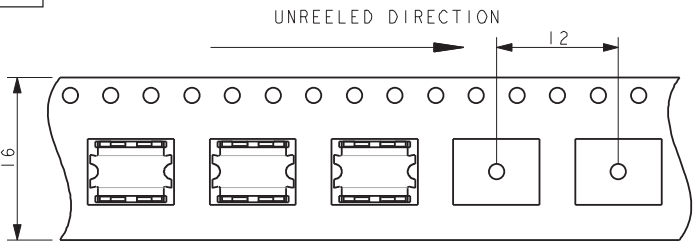

12-18 AWG IDC WIRE TO BOARD CONNECTOR SINGLE CONTACT

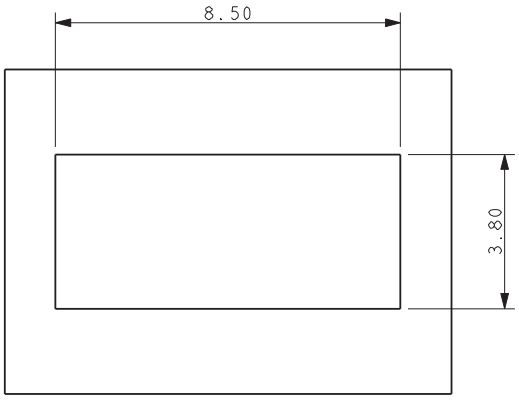

SUGGESTED PCB LAYOUT

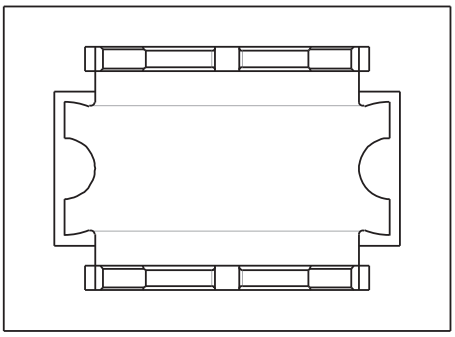

ORIENTATION OF CONTACT ON PAD

NOTES:
1. FOR FULL PRODUCT SPECIFICATION REFER TO AVX SPEC 201-01-208 AND 201-01-209
2. DIMENSIONS SHOWN ARE REFERENCE DIMENSIONS.
3. ASSEMBLY TOOLING ON PAGE 4.

ASSEMBLY TOOLING

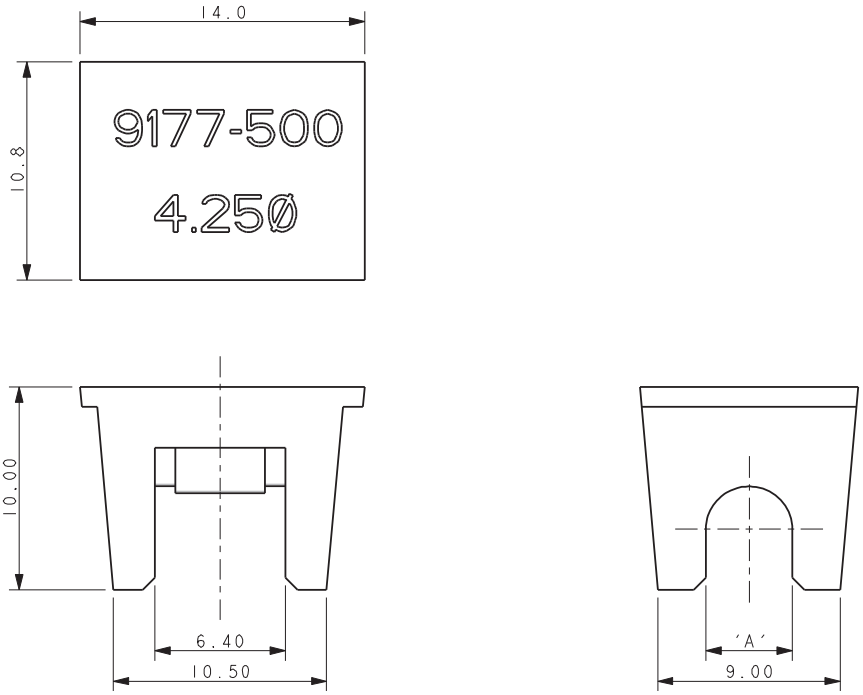

Wire Guage	Max Insulation (Dimensions 'A')	Tool Number Metal Tool for High Volume	Tool Numbere Plastic Tool for Small to Medium Volume
12-18 AWG	ø 4.25	06-9177-7020-01-001	06-9177-7022-01-001
12-18 AWG	ø 3.50	06-9177-7020-02-001	06-9177-7022-02-001
12-18 AWG	ø 2.75	06-9177-7020-03-001	06-9177-7022-03-001
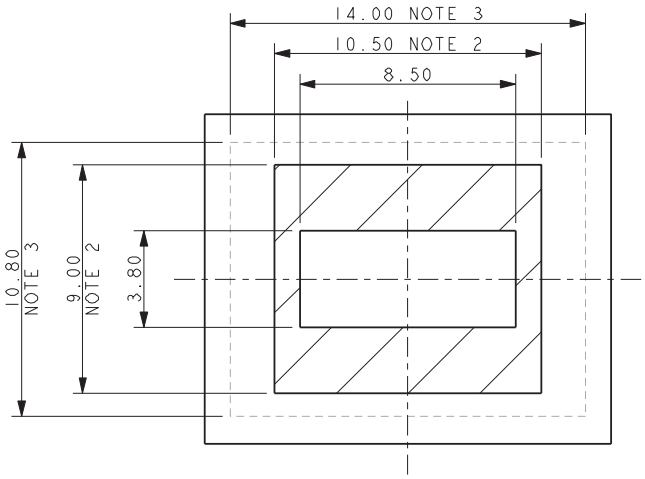
NOTES:
1. ASSEMBLY TOOLING FOR CONTACTS 70-9177-001-5XX-006 ONLY.
2. MINIMUM AREA OF PCB TO BE KEPT CLEAR OF COMPONENTS. TRACKS PERMISSIBLE.
3. MAXIMUM COMPONENT HEIGHT 9.0MM IN THIS AREA.
4. REFER TO TABLE FOR CORRECT TOOL/WIRE COMBINATION.
5. REFER TO APPLICATION NOTE 201-01-209 FOR FURTHER INFORMATION.
6. DIMENSIONS FOR TOOL ARE REFERENCE DIMENSIONS.