SIGN	DATE	DESCRIPTION	APPROVER
1	1/29'07	Soldering temperature changed from 245° to 250°	Tony
2	4/17'09	The design is changed	Jacke
3	4/17'09	Add the tolerance table	Jacke
4	2010.01.22	The demension is changed from 1.60mm to 1.10mm	Jacke
5	2010.01.22	The demension is changed from 0.40mm to 0.20~0.30mm	Jacke
6	2010.03.31	The material is changed from Brass to Copper	Jacke
7	04/23`12	Flange nut is changed	Chen Bo
8	04/23`12	The Dimension Dim C & Dim D are added	Chen Bo

THIS IS CAD DRAWING, DO NOT REVISE MANUALLY!!!

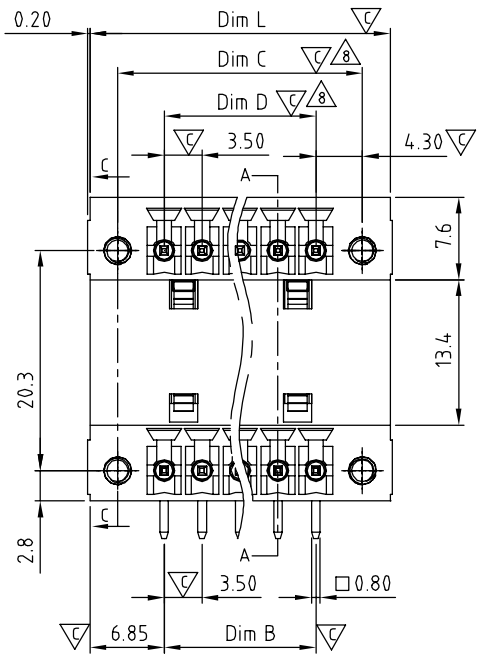

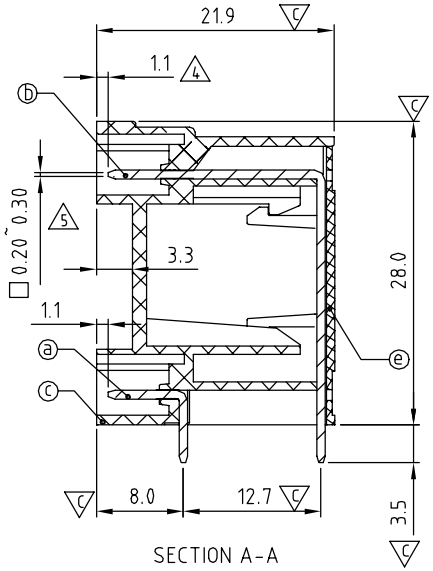

SECTION A-A

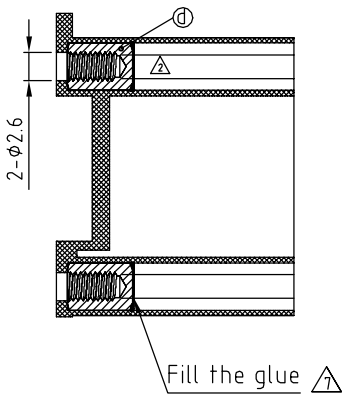

SECTION C-C

Material:
- Item ⓐ Short contact pin: Copper Tin plated
- Item ⓑ Long contact pin: Copper Tin plated
- Item ⓒ Terminal(housing): Thermoplastic (UL94V-0)
- Item ⓓ With flange nut: Brass ,M2.5
- Item ⓔ Terminal(cover): Thermoplastic (UL94V-0)

Electrical:	cULus
Voltage rating:	300V
Current rating:	10A
Withstanding Voltage:	1.6 KV
Operating temperature:	-40°C to +115°C
Soldering temperature:	250°C±10°C/5 Sec
Safety Approval:	c UL us
Critical dimension:	

VL xx 1 2 x 1 xxxx G

No. OF POLES
04: 2×2 POLES
:
48: 2×24 POLES

COLOR
0 Black (RAL9005)
2 Red (RAL3001/D)
3 Orange(RAL2011/P)
4 Yellow(RAL1018/A)
5 Green(RAL6018/T)
6 Blue (RAL5015/A)
8 Grey(RAL7035/D)

G: RoHS compliant (lead<4%) In copper Alloy

0000: "@" Logo
000A: "ANYTEK" Mark
Any special item by customer requst. please contact sales department.

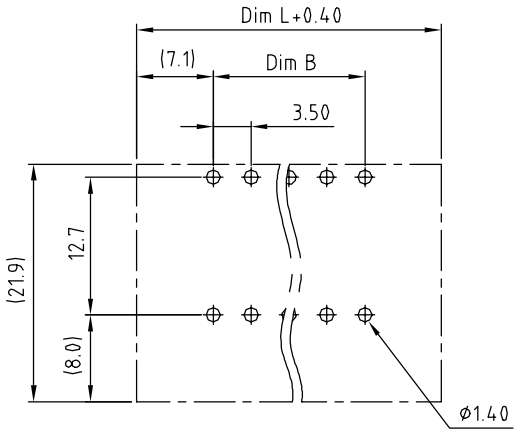

P.C.B. LAYOUT

N = Number of poles

Dim L=(N-1)×3.5+13.7
Dim B=(N-1)x3.5
Dim C=(N-1)x3.5+8.6
Dim D=(N-1)x3.5

Poles	Dim L	Dim B	Dim C	Dim D
2×2-2×4p	±0.15	±0.15	±0.15	±0.15
2×5-2×8p	±0.20	±0.20	±0.20	±0.20
2×9-2×13p	±0.25	±0.25	±0.25	±0.25
2×14-2×17p	±0.30	±0.30	±0.30	±0.30
2×18-2×24p	±0.35	±0.35	±0.35	±0.35

ANYTEK

CUSTOMER COPY

ALL RIGHTS RESERVED. REPRODUCTION OR ISSUE TO THIRD PARTIES IN ANY FORM WHATEVER IS NOT PERMITTED WITHOUT WRITTEN AUTHORITY FROM THE PROPRIETOR. PROPERTY OF ANYTEK TECHNOLOGY CO., LTD

TITLE	VL-3.5mm with flange Right-angle Series				
PART NO.	VLxx12x1xxxxG			DWG NO.	8VL0004
APPROVED	CHECKED	DESIGNED	DRAWN	CUST NO.	
		Chen Bo 04/23`12	Chen Bo 04/23`12	UNIT: mm	
				SCALE: NONE	
				SHEET: 01/01	REV.: F

Tolerance	
X.	±0.50
X.X	±0.30
X.XX	±0.10
X°	±1°