THIS DRAWING IS UNPUBLISHED. RELEASED FOR PUBLICATION -,- .
© COPYRIGHT - By - ALL RIGHTS RESERVED.

LOC	DIST
AD	00

REVISIONS

P	LTR	DESCRIPTION	DATE	DWN	APVD
	D1	REVISED PER ECO-14-005100	04APR2014	NK	RH

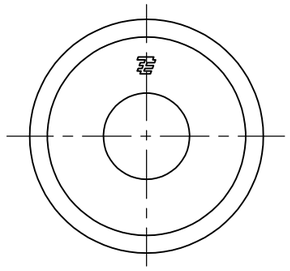

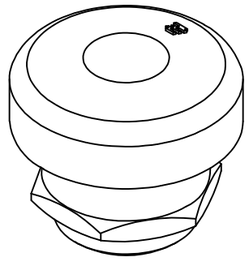

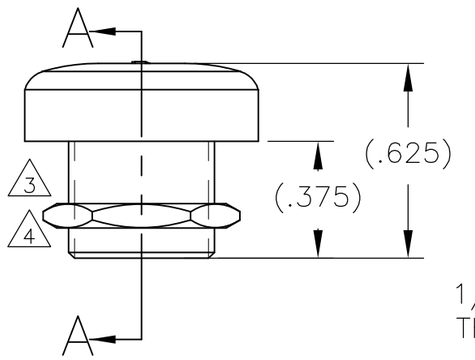

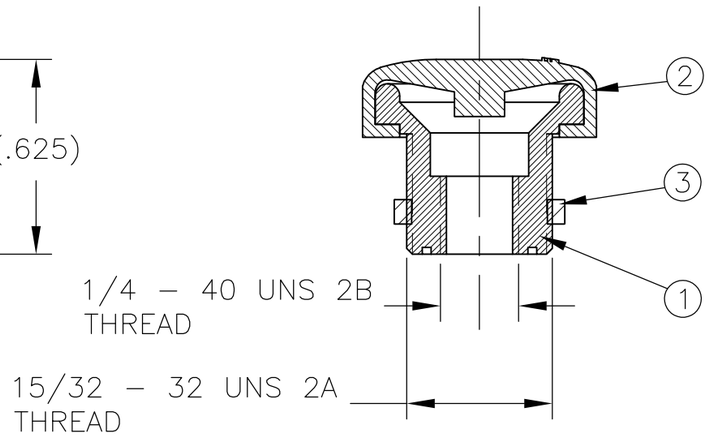

SECTION A–A

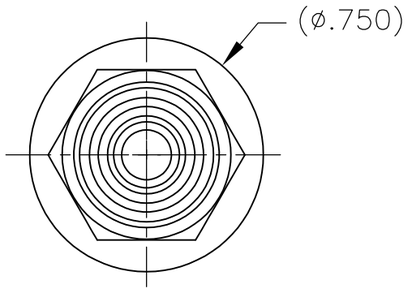

1 COMPONENTS MUST COMPLY WITH EUROPEAN DIRECTIVE 2002/95/EC ON RESTRICTION OF THE USE OF CERTAIN HAZARDOUS SUBSTANCES IN ELECTRICAL AND ELECTRONIC EQUIPMENT (ROHS DIRECTIVE).

2 USE PART DRAWING FOR ACTUAL DIMENSIONS. DO NOT TAKE MEASUREMENTS FROM CAD ASSEMBLY DRAWING, RUBBER CAP STRETCHED OVER THE BUSHING.

3 SUPPLIED WITH JAM NUT ASSEMBLED.

4 SUPPLIED WITH JAM NUT NOT ASSEMBLED.

	PART NUMBER	BUSHING MATERIAL	CAP MATERIAL
3	1825599-1	ABS, BLACK	SILICONE, COLOR RED
4	1825599-2	ABS, BLACK	SILICONE, COLOR GRAY
3	1825599-3	ABS, BLACK	SILICONE, COLOR BLACK

NO.	DESCRIPTION	DRAWING NO.	MATERIAL
1	THREADED BUSHING	BUSHING	BLACK ABS THERMOPLASTIC
2	BPT – RUBBER CAP	1825599-CAP	SILICONE PER ZZ-R-765 , CLASS 3A, GRADE 60, COLOR AS PER ABOVE TABLE
3	15/32-32 UNS-2B NUT	JAM NUT	BRIGHT FINISH NICKEL PLATED BRASS

THIS DRAWING IS A CONTROLLED DOCUMENT.

DIMENSIONS: INCHES

TOLERANCES UNLESS OTHERWISE SPECIFIED:
0 PLC ± –
1 PLC ± –
2 PLC ± –
3 PLC ± .010
4 PLC ± –
ANGLES ± 3°

MATERIAL –

FINISH –

DWN R BROWN 03JAN2008
CHK M WILBOURN 03JAN2008
APVD M WILBOURN 03JAN2008
PRODUCT SPEC —
APPLICATION SPEC —
WEIGHT —

TE Connectivity

NAME PUSHBUTTON SWITCH PANEL SEAL

SIZE	CAGE CODE	DRAWING NO	RESTRICTED TO
A3	00779	C-1825599	—

CUSTOMER DRAWING

SCALE 2:1 SHEET 1 OF 1 REV D1

1470-19 (3/11)