THIS DRAWING IS UNPUBLISHED. RELEASED FOR PUBLICATION 20
© COPYRIGHT 20 BY TYCO ELECTRONICS CORPORATION, ALL RIGHTS RESERVED.

LOC	DIST
-	-

REVISIONS

P	LTR	DESCRIPTION	DATE	DWN	APVD
	A	RELEASED PER ECO-09-013817	08JUL2009	RCF	JM
	B	REVISED PER ECO-09-017961	30JUL2009	RCF	JM

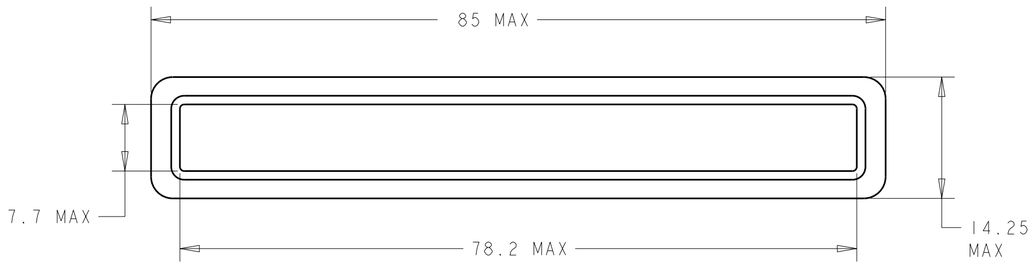

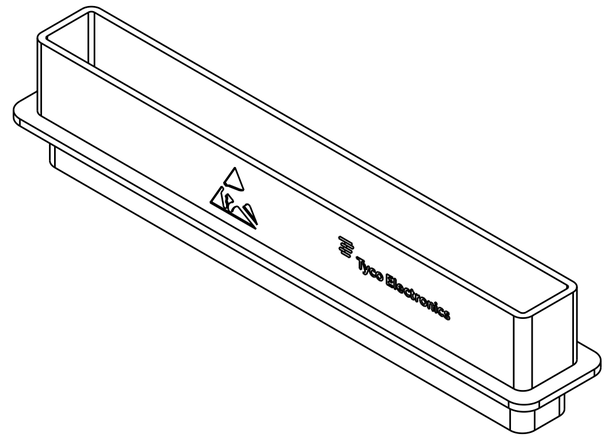

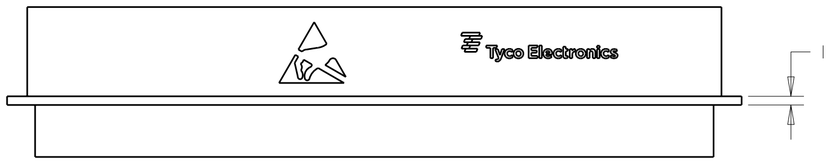

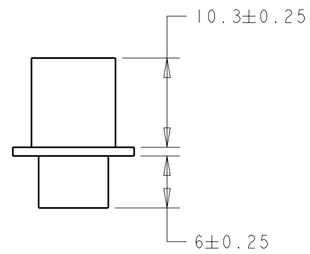

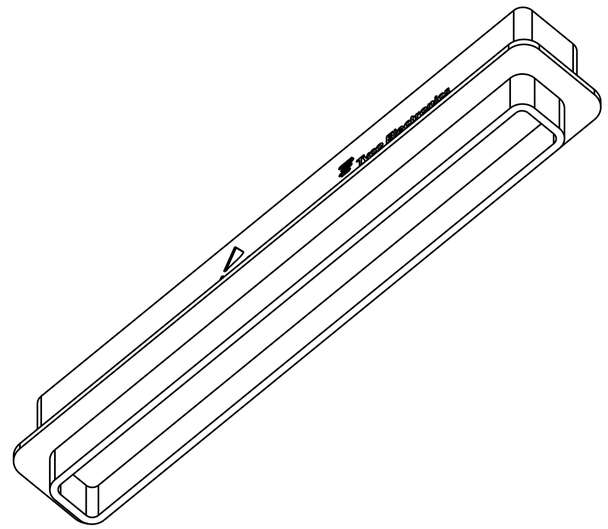

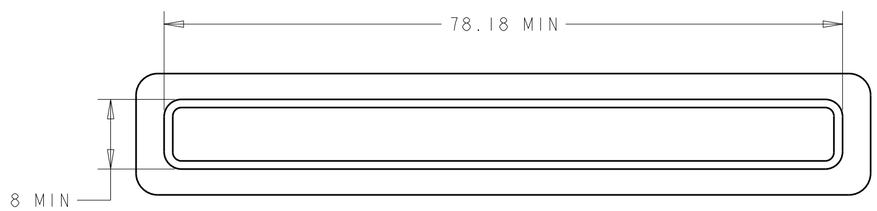

1 ANTI-STATIC THERMOPLASTIC ELASTOMER PER ASTM D5593, COLOR: BLACK.

1877519-1
PART NUMBER

THIS DRAWING IS A CONTROLLED DOCUMENT FOR TYCO ELECTRONICS CORPORATION. IT IS SUBJECT TO CHANGE AND THE CONTROLLING ENGINEERING ORGANIZATION SHOULD BE CONTACTED FOR THE LATEST REVISION.

DIMENSIONS: mm

TOLERANCES UNLESS OTHERWISE SPECIFIED:

0 PLC	±0.15
1 PLC	±0.1
2 PLC	±0.05
3 PLC	±-
4 PLC	±-
ANGLES	±1

MATERIAL 1 -

FINISH -

DWN	BH	22NOV2005
CHK	JPM	22NOV2005
APVD	JPM	22NOV2005

PRODUCT SPEC 108-2247
APPLICATION SPEC 114-13192
WEIGHT -

tyco Electronics
Tyco Electronics
Harrisburg, PA 17105-3608

NAME DUST COVER, 24 POSITION
-
-

SIZE	CAGE CODE	DRAWING NO	RESTRICTED TO
A2	00779	C-1877519	-

CUSTOMER DRAWING | SCALE 2:1 | SHEET 1 OF 1 | REV B

AMP 1471-9 REV 31MAR2000

Pro/ENGINEER DRAWING